SONY

CAMERA CONTROL UNIT

CCU-TX7

CAMERA CONTROL UNIT

CCU-TX7P

CAMERA OPERATION UNIT

COU-TX7

SDI OUTPUT BOARD

DXBK-701

SERVICE MANUAL

Vol. 2 (1st Edition/Revised 1)

SAFETY CHECK-OUT

After correcting the original service problem, perform the following safety checks before releasing the set to the customer :

Check the metal trim, "metallized" knobs, screws, and all other exposed metal parts for AC leakage. Check leakage as described below.

LEAKAGE TEST

The AC leakage from any exposed metal part to earth ground and from all exposed metal parts to any exposed metal part having a return to chassis, must not exceed 0.5 mA. Leakage current can be measured by any one of three methods.

1. A commercial leakage tester, such as the Simpson 229 or RCA WT-540A. Follow the manufacturers' instructions to use these instruments.
2. A battery-operated AC milliammeter. The Data Precision 245 digital multimeter is suitable for this job.
3. Measuring the voltage drop across a resistor by means of a VOM or battery-operated AC voltmeter. The "limit" indication is 0.75 V, so analog meters must have an accurate low-voltage scale. The Simpson 250 and Sanwa SH-63Trd are examples of a passive VOM that is suitable. Nearly all battery operated digital multimeters that have a 2 V AC range are suitable. (See Fig. A)

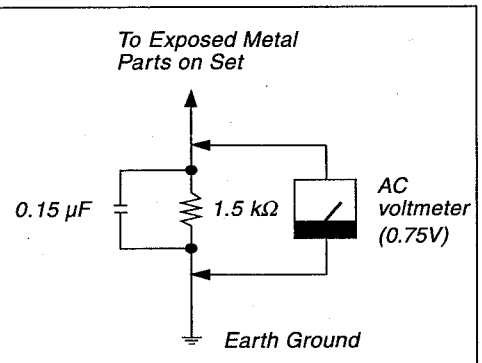

Fig A. Using an AC voltmeter to check AC leakage.

このマニュアルについて

本書の目的

本書はカメラコントロールユニットCCU-TX7,カメラオペレーションユニットCOU-TX7, SDIアウトプットボードDXBK-701のサービスマニュアルVOL.2です。
本書では、半導体、パーツリスト、ブロックダイヤグラム、マウント図、回路図を記載しています。

関連マニュアル

この「サービスマニュアルVOL.2」の他に、下記のマニュアルが用意されています。

- **サービスマニュアル Vol.1**
  部品番号：9-977-287-12
  本機の取り扱い、設置、操作方法と部品の交換方法および調整などに関する情報を記載しています。

MANUAL STRUCTURE

Purpose of this manual

This manual is the Service Manual Vol. 2 of the CAMERA CONTROL UNIT CCU-TX7 (for NTSC) and CCU-TX7P (for PAL), CAMERA OPERATION UNIT COU-TX7 and SDI OUTPUT BOARD DXBK-701.
This manual contains the semiconductor pin assignments, parts lists, block diagrams, board illustrations and schematic diagrams.

Related manuals

In addition to this Service Manual Vol. 2, the following manual is provided.

- **Service Manual Vol. 1**
  Part No. 9-977-286-12
  Contains the operation manual related to the operations of this equipment, the replacement of the parts and adjustments.

TABLE OF CONTENTS

5. SEMICONDUCTOR PIN ASSIGNMENTS

6. SPARE PARTS

6-1. NOTES ON REPAIR PARTS 6-1
6-1. 補修部品注意事項 6-1
6-2. EXPLODED VIEW 6-2
6-3. ELECTRICAL PARTS LIST 6-10
  6-3-1. CCU-TX7/TX7P 6-10
  6-3-2. COU-TX7 6-77
  6-3-3. DXBK-701 6-79
6-4. CHANGED PARTS 6-88

7. BLOCK DIAGRAMS

OVERALL BLOCK 7-1
CT-181 BLOCK 7-2
AA-90 BLOCK 7-4
YD-26 BLOCK 7-6
ES-20 BLOCK 7-8
DU-33 BLOCK 7-9
SDI-44 BLOCK (DXBK-701) 7-10

8. SCHEMATIC DIAGRAMS AND BOARD ILLUSTRATIONS

CT-181 8-2
AA-90 8-8
YD-26 8-16
ES-20 8-22
  DUS-100 8-22
  DU-33 8-23
AU-234 8-32
  DUS-86 8-32
CN-1325 8-34
CN-1327 8-35
CN-1328 8-35
CN-1350 8-35
CN-1351 8-35
IO-140 8-35
MB-693 8-36
POWER SUPPLY (PS-502, PS-503) 8-40
SW-892 (COU-TX7) 8-46
SDI-44 (DXBK-701) 8-48

SECTION 5
SEMICONDUCTOR PIN ASSIGNMENTS

ここに記載されている半導体は，それぞれの機能を等価的に表したものです。 なお，互換性のない型名を併記していることがありますので，部品を交換するときは，Spare Partsの章を参照してください。
等価回路はＩＣメーカーのデータブックに従いました。

Semiconductors of which functions are equivalent are described here. For parts replacement, refer to the section of Spare Parts in this manual. The circuit diagram of each IC is obtained from the IC data book published by the manufacturer.

DIODE Page

1S2835-T1 5-3
1S2836 5-3
1S2837-T1 5-3
1SS123-T1 5-3
1SS184 5-3
1SS226 5-3
1SS269 5-3
1SS269-TE85L 5-3
1SS272 5-3
1SS319(TE85R) 5-3
1SV172 5-3
1SV172-TE85L 5-3
1T363 5-3
1T363A-M20-T8A 5-3
1Z15 5-3
1Z6.8 5-3

D10LC20U 5-3
D10LC40 5-3
D10SC6M 5-3
D1FL20U 5-3
D1FL40 5-3
D1FS4 5-3
D5SB60 5-3
DFG1C8 5-3

EA30QS04-F 5-3
EA30QS04-TE16F2 5-3

HSM88AS-TL 5-3
HSM88ASTL 5-3
HZ6A2L 5-3
HZM12NB1-TR 5-3
HZM15NB3-TL 5-3

KV1470 5-3
KV1470TL00 5-3

RB715F 5-3
RB715F-T106 5-3
RB717F 5-3
RB717F-T106 5-3
RD10M-B2 5-3
RD10M-T1B 5-3
RD12UJN-T1 5-3
RD2.0M-T1B 5-3
RD2.0MB 5-3
RD2.0UH-T1 5-3
RD2.7M-B2 5-3
RD2.7M-T1B 5-3

DIODE Page

RD3.9M-B1 5-3
RD3.9M-T1B 5-3
RD3.9UH-T1 5-3
RD4.7M-B 5-3
RD4.7M-T1B 5-3
RD5.1M-T1B 5-3
RD5.6UJN-T1 5-3

S10SC4M 5-3
S1WB60 5-3

UZM5.1B 5-3

LED Page

GL3ED8 5-4
GL5HD8T 5-4
GL5KG8T 5-4
GL8KG21T 5-4

LB-202ML 5-5

MPG3371X-150 5-4

TLUR163 5-4

TRANSISTOR Page

2SA1162G 5-3
2SA1162Y-TE85R 5-3
2SA1213Y-TE12L 5-3
2SA1213Y-TE12R 5-3
2SA1226-T1E3 5-3
2SA1460K 5-3
2SA1462 5-3
2SA1462-T1Y33Y34 5-3
2SA1576A-T106-QR 5-3
2SA1576A-T106-R 5-3
2SA1610-T1Y33 5-3
2SA1610-Y33 5-3
2SA1611-M6 5-3
2SA1611-T1M7 5-3
2SA812-T1M6 5-3
2SB798-DL 5-3
2SC1009A-FA4 5-3
2SC1009A-T1FA4 5-3
2SC1623 5-3
2SC1623-T1L5 5-3
2SC2712-YG 5-3
2SC2714-Y 5-3
2SC2714Y-TE85L 5-3
2SC2873Y-TE12L 5-4
2SC3356-K 5-3
2SC3356-T1K 5-3
2SC3733K 5-3
2SC3837KQ 5-3
2SC3837KT146Q 5-3
2SC4081T106R 5-3
2SC4177-L6 5-3
2SC4177-T1L5L6 5-3
2SC5551-O 5-4
2SD1623-S 5-4
2SD596-DV5 5-3
2SD596-T1DV5 5-3
2SD596DV345 5-3
2SD596T1-DV345 5-3
2SK1078 5-4
2SK1332-3 5-4
2SK1332-3-TL 5-4
2SK508-K51 5-4
2SK508-T1K52 5-4
2SK620 5-4
2SK620-TX 5-4
2SK94-T1X1 5-4
2SK94-X4 5-4

DTA144EUA-T106 5-4
DTC143XUA-T106 5-4

TRANSISTOR Page

DTC144EUA-T106 5-4

IRF630 5-4
IRFI840G-LF38 5-4
IRFI9620G 5-4
IRFP054 5-4
IRFPE50 5-4

SGM2016AM-T7 5-4
SGM2016M-T7 5-4
SGM2016P-T7 5-4

XN6401 5-4
XN6401-TW 5-4
XN6435 5-4
XN6435-TW 5-4
XN6501 5-4
XN6501-TW 5-4
XN6534 5-4
XN6534-TW 5-4

OTHERS Page

PS2604L 5-5

TLP521-1GR 5-5
TLP721(D4)-GR 5-5

Index

IC	Page
AK5340-VS	5-23
AK5340-VS-E1	5-23
BA10358F-E2	5-5
CLC505AJE	5-5
CLC505AJE-T	5-5
CX22017	5-5
CXA1122AM-3	5-6
CXA1122AM-3-T4	5-6
CXA1432M	5-6
CXA1432M-T4	5-6
CXB1341R	5-22
CXD1216M	5-6
CXD1216M-TH	5-6
CXD1217Q	5-8
CXD1217Q-T4	5-8
CXD2310AR-T4	5-27
CXD606-101R	5-24
CXD8281Q	5-25
CXD8385Q	5-26
CXD8826Q	5-33
CXD8924Q	5-32
HD151015T	5-29
HD151015TEL	5-29
HD6413308RF10	5-28
HD6435368AW34F	5-10
IR2110	5-7
LA1235	5-7
LC3564BM-10-TLM	5-9
LC3564SM-10-TLM	5-9
LM1881M	5-7
LM339NS	5-9
LM358D	5-5
LM358DR	5-5
LM4040BIM3-5.0	5-11
LM4040BIM3X-5.0	5-11
LT1252CS8	5-11
LT1252CS8-E2	5-11
LT1253CS8-E2	5-11
M27C512-10F1	5-12
M51348AFP	5-12
M51348AFP-E1	5-12
M52313SP	5-13
MAX202CSE	5-13
MAX202CSE-T	5-13
MAX4420-CPA	5-11
MB3759PF	5-13
MB88346BPFV	5-29
MB88346BPFV-EF	5-29
MC14001BF	5-12
MC14001BFEL	5-12
MC14011BF	5-12
MC14011BFEL	5-12
MC14051BF	5-13
MC14051BFEL	5-13
MC14053BF	5-7
MC14053BFEL	5-7
MC14520BF	5-14
MC14520BFEL	5-14
MC14528BF	5-13
MC14528BFEL	5-13
MC34182DR2	5-14
MC34182M	5-14
MC74HC4053F	5-14
NJM1496M	5-14
NJM1496M-TE2	5-14
NJM2043M-D	5-14
NJM2043M-D-TE2	5-14
NJM4556AM-TE2	5-14
NJM4558M-TE2	5-14
NJM4558V-TE2	5-14
NJM4560M	5-14
NJM4560M-TE2	5-14
NJM567M	5-15
NJM78L05UA	5-14
NJM78L05UA-TE1	5-14
QL12X16B-XPF100C	5-29
S-8054HN-CB-S	5-14
S-8054HN-CB-T1	5-14
S-80840ANUP-ED4-T2	5-14
SC7S00F	5-15
SC7S02F	5-29
SC7S04F	5-15
SN74HC00ANS	5-15
SN74HC00ANS-E05	5-15
SN74HC04ANS	5-15
SN74HC04ANS-E05	5-15
SN74HC10ANS	5-15
SN74HC10ANS-E05	5-15
SN74HC138ANS	5-16
SN74HC138ANS-E05	5-16
SN74HC14ANS	5-16
SN74HC14ANS-E05	5-16
SN74HC158ANS	5-16
SN74HC158ANS-E05	5-16
SN74HC32APW-E05	5-30
SN74HC393ANS	5-16
SN74HC393ANS-E05	5-16
SN74HC595ADB-E05	5-16
SN74HC595ANS	5-16
SN74HC595ANS-E05	5-16
SN74LS123NS	5-17
SN74LS123NS-E05	5-17
TA8129Z	5-17
TC4011BF	5-12
TC4049BF	5-17
TC4081BF	5-17
TC4S66F	5-17
TC4S66F(TE85R)	5-17
TC4W53F	5-17
TC4W53F(TE12R)	5-17
TC4W53FU	5-17
TC4W53FU(TE12R)	5-17
TC74HC151AF(EL)	5-18
TC74HC221AF	5-17
TC74HC221AF(EL)	5-17
TC74HC4051AF(EL)	5-18
TC74HC4053AF(EL)	5-14
TC74HC4072AF	5-18
TC74HC4538AFT(EL)	5-18
TC74HC595AF(EL)	5-16
TC74HC74AF(EL)	5-18
TC74VHC00FT(EL)	5-15
TC74VHC04FT(EL)	5-15
TC74VHC11F	5-19
TC74VHC11F(EL)	5-19
TC74VHC123AFT(EL)	5-30
TC74VHC163FT(EL)	5-30
TC74VHC164FT(EL)	5-30
TC74VHC32FT(EL)	5-30
TC74VHC574FT(EL)	5-30
TC74VHC74FT(EL)	5-18
TC74VHC86FT(EL)	5-30
TC7S00F(TE85R)	5-15
TC7S02F(TE85R)	5-29
TC7S04F(TE85R)	5-15
TC7S04FU(TE85R)	5-15
TC7S32FU(TE85R)	5-31
TC7S86F(TE85R)	5-31
TC7S86F-TE85L	5-31
TC7SH08FU-TE85R	5-31
TC7W02F	5-19
TC7W02FU(TE12R)	5-19
TC7W04FU	5-31
TC7W04FU(TE12R)	5-31
TC7WU04FU(TE12R)	5-31
TE7751	5-20
TL062CPS	5-14
TL062CPS-E05	5-14
TL062CPW	5-14
TL062CPW-E05	5-14
TL1451ACPW-E05	5-31
TL7705CPS-B	5-31
TL7705CPS-B-E05	5-31
TLC272CPS	5-19
TLC272CPS-E05	5-19
TLC272CPW-E05	5-19
TLC274CNS	5-19
TLC274CNS-E05	5-19
TLC274CPW	5-19
TLC274CPW-E05	5-19
TLC2932IPW-E20	5-32
UC3854AN	5-19
UPA101G	5-21
UPA101G-E1	5-21
UPC1093T	5-21
UPC311G2	5-21
UPC311G2-E2	5-21
UPC319G2-E2	5-21
UPC324G2	5-21
UPC339G2	5-9
UPC339G2-E2	5-9
UPC358G2-E2	5-5
UPC393G2	5-21
UPC393G2-E2	5-21
UPC4558G2	5-14
UPC78L15J	5-21
UPC812G2	5-14
UPC812G2-E2	5-14
UPD71051GB-10-3B4	5-22
X24164SIT1	5-32
X24C02S-T1	5-23

DIODE

-TOP VIEW-

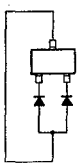

1S2835-T1
1S2836
1SS269
1SS269-TE85L
RB717F
RB717F-T106

-TOP VIEW-

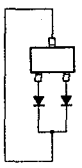

1S2837-T1
1SS184
RB715F
RB715F-T106

-TOP VIEW-

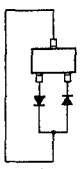

1SS123-T1
1SS226
1SV172
1SV172-TE85L
HSM88AS-TL
HSM88ASTL

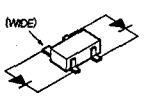

1SS272
1SS319(TE85R)

-TOP VIEW-

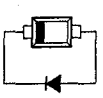

1T363
1T363A-M20-T8A

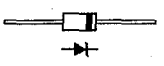

1Z15
1Z6.8
HZ6A2L

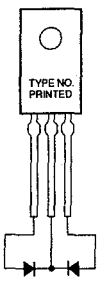

D10LC20U
D10LC40
D10SC6M

-TOP VIEW-

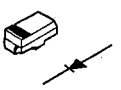

D1FL20U
D1FL40
D1FS4

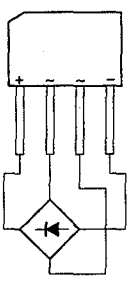

D5SB60

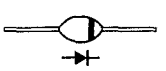

DFG1C8

—TOP VIEW—

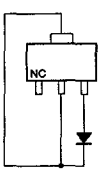

EA30QS04-F
EA30QS04-TE16F2

-TOP VIEW-

HZM12NB1-TR
HZM15NB3-TL
RD10M-B2
RD10M-T1B
RD2.0M-T1B
RD2.0MB
RD2.7M-B2
RD2.7M-T1B
RD3.9M-B1
RD3.9M-T1B
RD4.7M-B
RD4.7M-T1B
RD5.1M-T1B
UZM5.1B

-TOP VIEW-

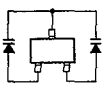

KV1470
KV1470TL00

—TOP VIEW—

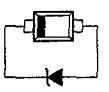

RD12UJN-T1
RD2.0UH-T1
RD3.9UH-T1
RD5.6UJN-T1

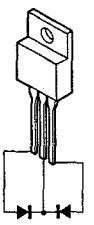

S10SC4M

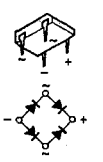

S1WB60

TRANSISTOR

-TOP VIEW-

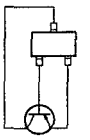

2SA1162G
2SA1162Y-TE85R
2SA1226-T1E3
2SA1462
2SA1462-T1Y33Y34
2SA1576A-T106-QR
2SA1576A-T106-R
2SA1610-T1Y33
2SA1610-Y33
2SA1611-M6
2SA1611-T1M7
2SA812-T1M6

-TOP VIEW-

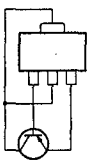

2SA1213Y-TE12L
2SA1213Y-TE12R
2SB798-DL

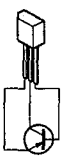

2SA1460K

-TOP VIEW-

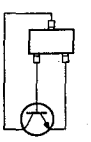

2SC1009A-FA4
2SC1009A-T1FA4
2SC1623
2SC1623-T1L5
2SC2712-YG
2SC2714-Y
2SC2714Y-TE85L
2SC3356-K
2SC3356-T1K
2SC3837KQ
2SC3837KT146Q
2SC4081T106R
2SC4177-L6
2SC4177-T1L5L6
2SD596-DV5
2SD596-T1DV5
2SD596DV345
2SD596T1-DV345

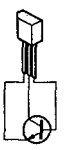

2SC3733K

Transistor, LED

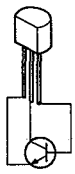

2SC5551-O

-TOP VIEW-

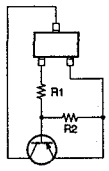

DTA144EUA-T106
(R1, R2=47 K)

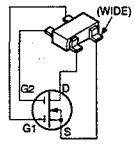

SGM2016AM-T7

LED

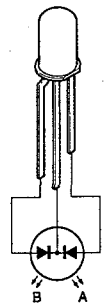

GL3ED8

-TOP VIEW-

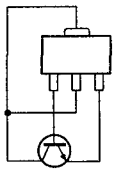

2SC2873Y-TE12L
2SD1623-S

-TOP VIEW-

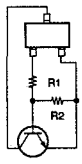

DTC143XUA-T106
(R1=4.7K, R2=10K)
DTC144EUA-T106
(R1, R2=47 K)

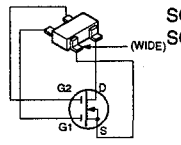

SGM2016M-T7
SGM2016P-T7

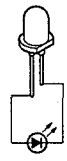

GL5HD8T
GL5KG8T
MPG3371X-150

-TOP VIEW-

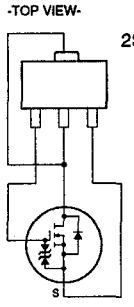

2SK1078

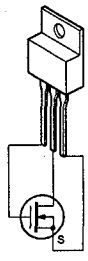

IRF630
IRFI9620G

-TOP VIEW-

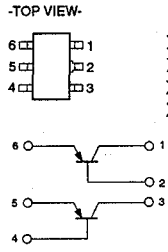

XN6401
XN6401-TW
XN6435
XN6435-TW

GL8KG21T

-TOP VIEW-

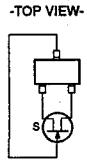

2SK1332-3
2SK1332-3-TL
2SK508-K51
2SK508-T1K52
2SK94-T1X1
2SK94-X4

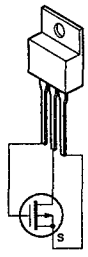

IRFI840G-LF38

-TOP VIEW-

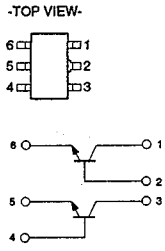

XN6501
XN6501-TW
XN6534
XN6534-TW

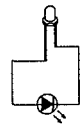

TLUR163

-TOP VIEW-

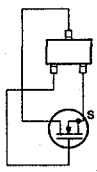

2SK620
2SK620-TX

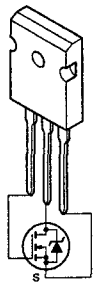

IRFP054
IRFPE50

IC

BA10358F-E2 (ROHM)
LM358D (TI)
LM358DR
UPC358G2-E2

DUAL OPERATIONAL AMPLIFIERS
(SINGLE-SUPPLY TYPE)
–TOP VIEW–

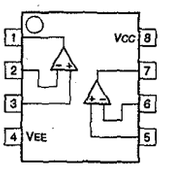

TYPE	VCC - VEE
828 TYPE	+5 to +36V
2244 TYPE	+2.5 to +36V
2904 TYPE	+3 to +24V
3404 TYPE	+4 to +32V
3414 TYPE	+3 to +10V
4572 TYPE	+4 to +14V
5216 TYPE	+4 to +32V
7022 TYPE	+3 to +16V
75W01 TYPE	+3 to +10V
33172 TYPE	+3 to +44V
OTHERS	+3 to +36V

CLC505AJE (COMLINEAR)
CLC505AJE-T

OPERATIONAL AMPLIFIER
—TOP VIEW—

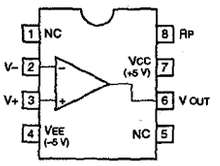

—TOP VIEW—

LB-202ML

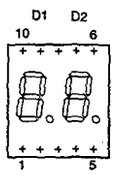

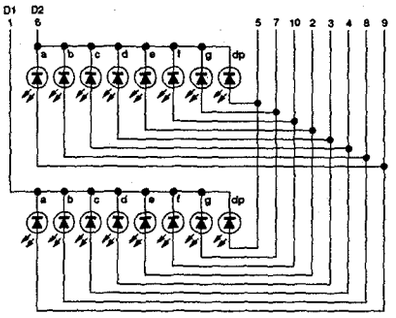

OTHERS

-TOP VIEW-

PS2604L

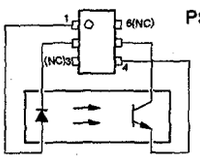

—TOP VIEW—

TLP521-1GR
TLP721(D4)-GR

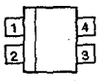

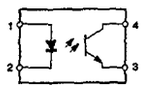

CX22017 (SONY)

VIDEO SIGNAL PROCESSOR
-TOP VIEW-

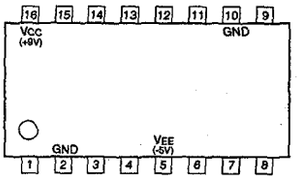

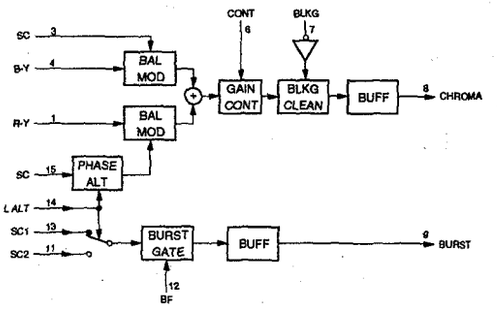

CXA1122AM-3 (SONY)
CXA1122AM-3-T4

RF MODULATOR
-TOP VIEW-

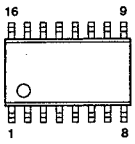

INPUT

4.5MHz TANK	; FOR AUDIO TANK COIL CONNECTING
AUDIO	; AUDIO SIGNAL
CARRIER OFF SW	; CARRIER CONTROL DC
CH SW	; CHANNEL SELECT
MOD ADJ	; MODULATION ADJUST
P/S ADJ	; PICTURE / SOUND RATIO ADJUST
SAW	; SURFACE ACOUSTIC WAVE
VIDEO	; VIDEO SIGNAL

OUTPUT

ANT SW CONT	; ANTENNA SWITCH CONTROL DC
REG	; REGULATOR
RF	; RF
SAW OUT 1,2	; SURFACE ACOUSTIC WAVE

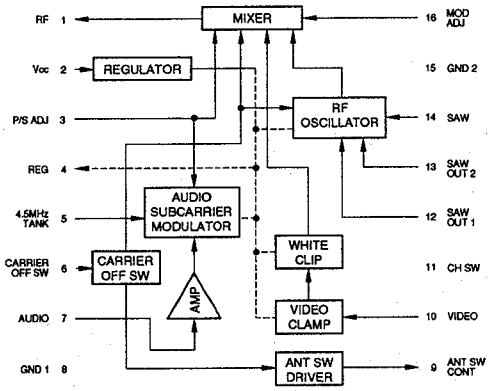

CXA1432M (SONY)
CXA1432M-T4

VIDEO SIGNAL CLAMPER
— TOP VIEW —

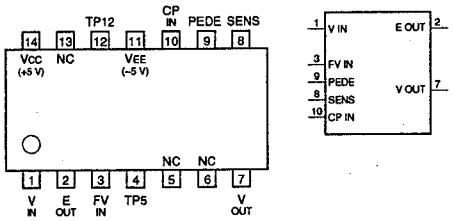

CP IN	; CLAMP PULSE INPUT
E OUT	; BUFFER AMP OUTPUT
FV IN	; FLOATING VIDEO SIGNAL INPUT
PEDE	; CLAMP LEVEL DC INPUT
SENS	; CLAMP POINT SIGNAL INPUT
TP5, TP12	; FOR TEST
V IN	; VIDEO SIGNAL INPUT
V OUT	; VIDEO SIGNAL OUTPUT

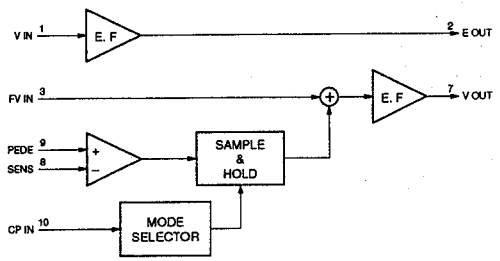

CXD1216M (SONY)
CXD1216M-TH

C-MOS GENLOCK DRIVER
-TOP VIEW-

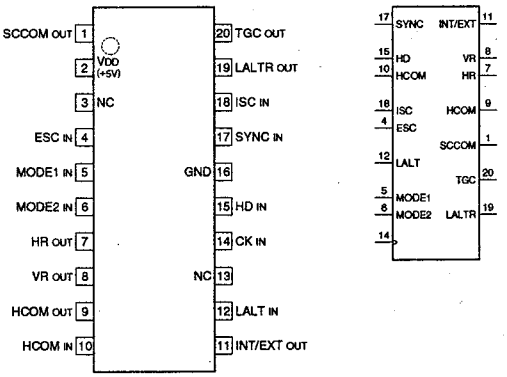

INPUT		MODE	SYSTEM
MODE1	MODE2		
0	0	M1	PAL-VBS
1	0	M2	PALM-VBS
0	1	M3	PAL,SECAM-VS/SC/LALT
1	1	M4	NTSC-VBS,NTSC-VS/SC PALM-VS/SC/LALT

0 ; LOW LEVEL
1 ; HIGH LEVEL

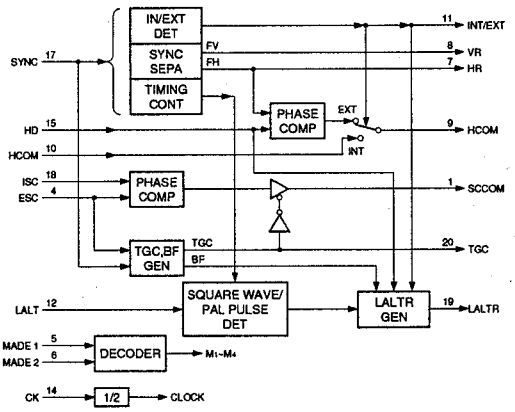

INPUT

CK	; 4fsc CLOCK INPUT
ESC	; SC/COLOR BURST
HCOM	; PHASE COMPARATE FROM CXD1217
HD	; H DRIVE FROM CXD1217
ISC	; SUBCARRIER FROM CXD1217
LALT	; LALT FROM REFERENCE SIGNAL GENERATOR
MODE1,2	; SYSTEM SELECT
SYNC	; SYNC FROM REFERENCE SIGNAL GENERATOR

OUTPUT

HCOM	; PHASE COMPARATOR HR WITH HD
HR	; fH OF SYNC SEPARATE
INT/EXT	; INTERNAL/EXTERNAL SPECIFIED
LALTR	; LINE CHANGE RESET
SCCOM	; PHASE COMPARATOR ESC WITH ISC
TGC	; TRISTATE CONTROL
VR	; fV OF SYNC SEPARATE

MC14053BF (MOTOROLA)
MC14053BFEL

C-MOS TRIPLE 2-CHANNEL ANALOG MULTIPLEXERS/DEMULTIPLEXERS
—TOP VIEW—

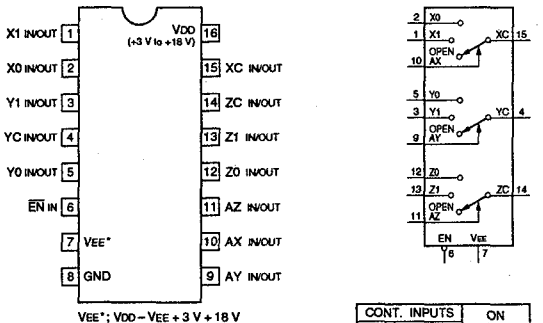

VEE*; VDD – VEE + 3 V + 18 V

0 ; LOW LEVEL
1 ; HIGH LEVEL
X ; DON'T CARE

CONT. INPUTS		ON CHANNEL
EN	A (X, Y, Z)	
0	0	0
0	1	1
1	X	OPEN

IR2110 (INTERNATIONAL RECTIFIER)

BRIDGE DRIVER
—TOP VIEW—

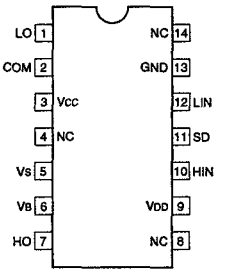

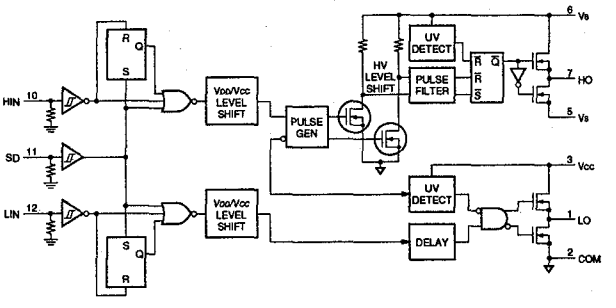

LM1881M (NS)

VIDEO SYNC SEPARATOR
—TOP VIEW—

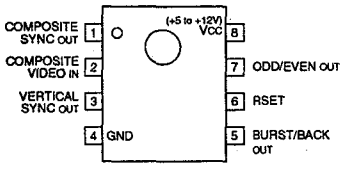

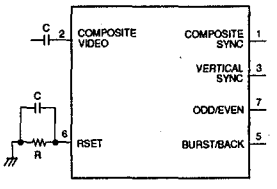

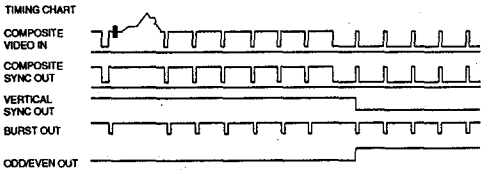

LA1235 (SANYO)

FM IF DEMODULATOR
-TOP VIEW-

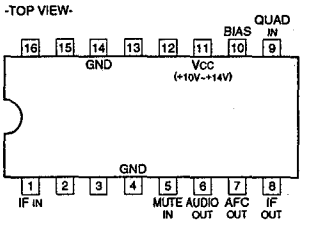

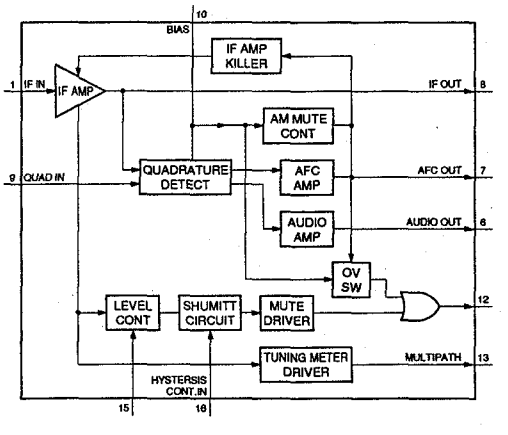

CXD1217Q (SONY)
CXD1217Q-T4

C-MOS SYNC GENERATOR
-TOP VIEW-

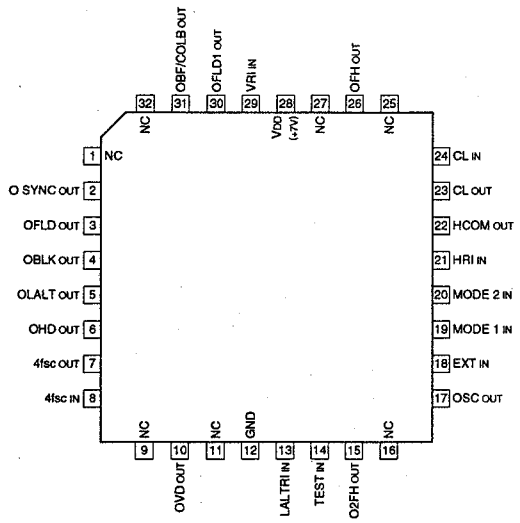

SYSTEM	4fsc	CLOCK
NTSC	910fH	910fH
PAL	1135fH + 2fv	908fH
PALM	909fH	910fH
SECAM	---	908fH

INPUT		SYSTEM
MODE1	MODE2	
0	0	NTSC
0	1	SECAM
1	0	PALM
1	1	PAL

0 ; LOW LEVEL
1 ; HIGH LEVEL

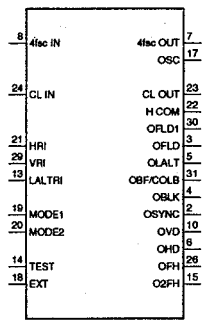

INPUT
4fsc IN ; 4fsc
CL IN ; CLOCK
EXT ; SYNC MODE SELECT
(L : INTERNAL/H : EXTERNAL)
HRI ; HORIZONTAL RESET
LALTRI ; LINE ALTERNATE RESET
MODE1, 2 ; SYSTEM SELECT
VRI ; VERTICAL RESET

OUTPUT
4fsc OUT ; 4fsc
CL OUT ; CLOCK
HCOM ; PHASE COMPARATOR
O2FH ; 2fH
OBF/COLB ; BURST FLAG/COLOR BLANKING
OBLK ; COMPOSITE BLANKING
OFH ; fH
OFLD ; FIELD PULSE
OFLD1 ; FIELD1
OHD ; HORIZONTAL DRIVE
OLALT ; LINE ALTERNATE
OSC ; SUBCARRIER
OSYNC ; COMPOSITE SYNC
OVD ; VERTICAL DRIVE

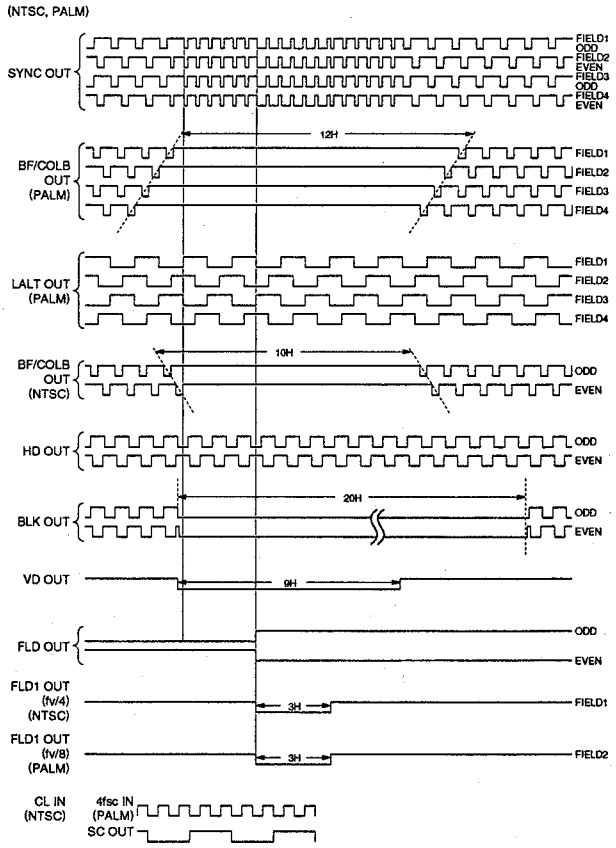

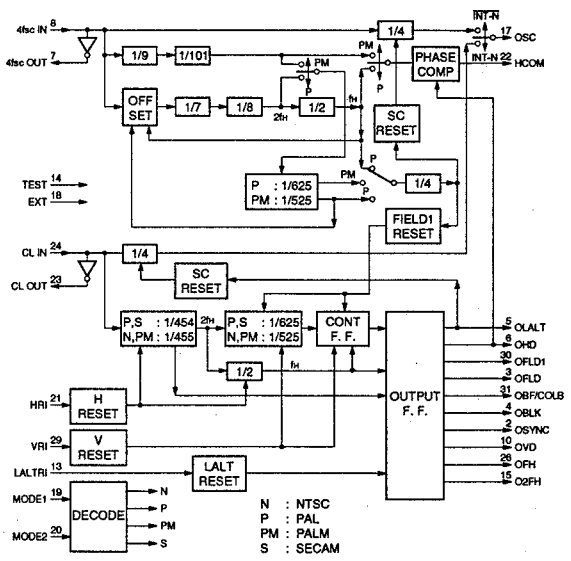

(PAL, SECAM)

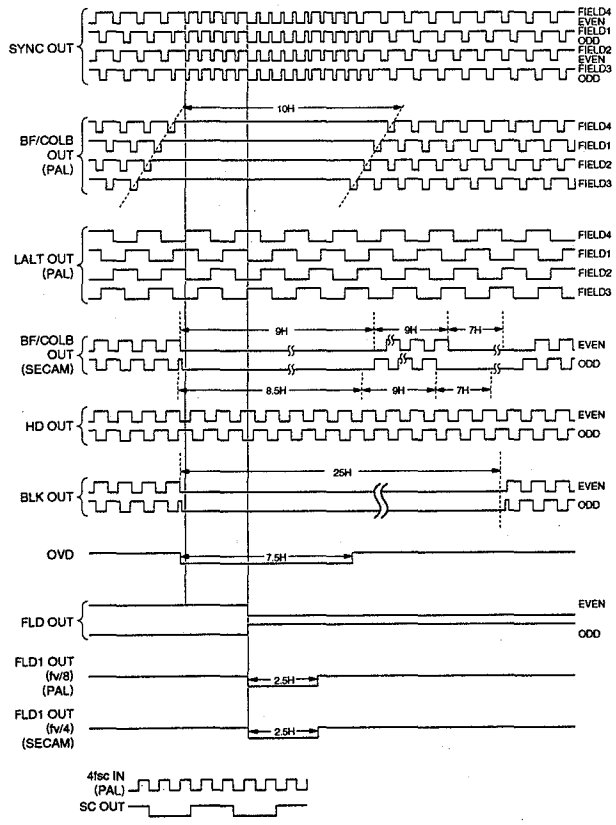

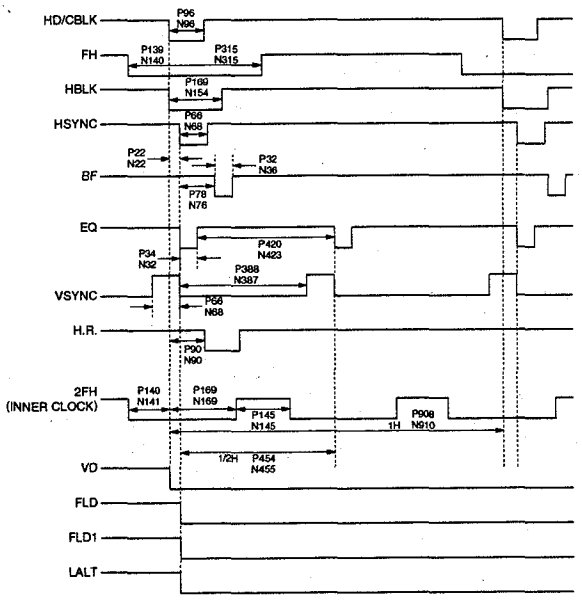

P : PAL, SECAM
N : NTSC, PALM

LC3564BM-10-TLM (SANYO)
LC3564SM-10-TLM (SANYO)

64 K (8,192 × 8)-BIT SRAM
—TOP VIEW—

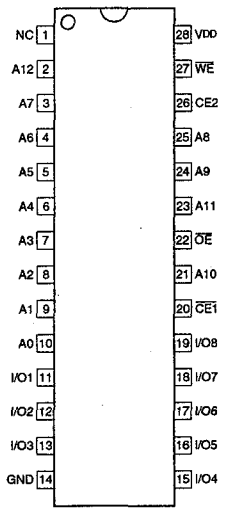

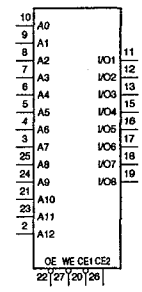

INPUTS
A0 - A12 : ADDRESS
CE1, CE2 : CHIP ENABLE
OE : OUTPUT ENABLE
WE : WRITE ENABLE

INPUTS/OUTPUTS
I/O1 - I/O8 : DATA

OTHER
NC : NO CONNECTION

CE1	CE2	OE	WE	MODE	I/O TERMINAL
1	X	X	X	NOT SELECT	HIGH IMPEDANCE
X	0	X	X	NOT SELECT	HIGH IMPEDANCE
0	1	1	1	OUTPUT DISABLE	HIGH IMPEDANCE
0	1	0	1	READ	OUTPUT DATA
0	1	X	0	WRITE	INPUT DATA

0 : LOW LEVEL
1 : HIGH LEVEL
X : DON'T CARE

LM339NS (TI)
UPC339G2 (NEC)
UPC339G2-E2

QUAD COMPARATORS
—TOP VIEW—

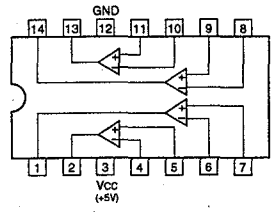

HD6435368AW34F (HITACHI)

C-MOS 16-BIT MICRO COMPUTER UNIT

- TOP VIEW -

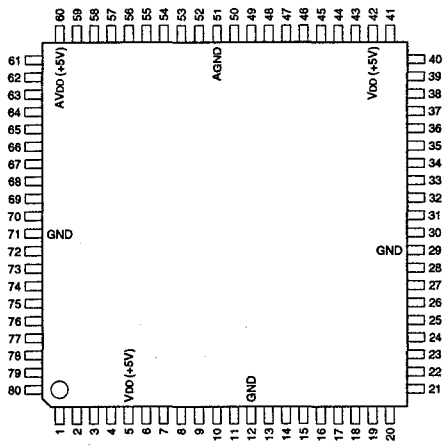

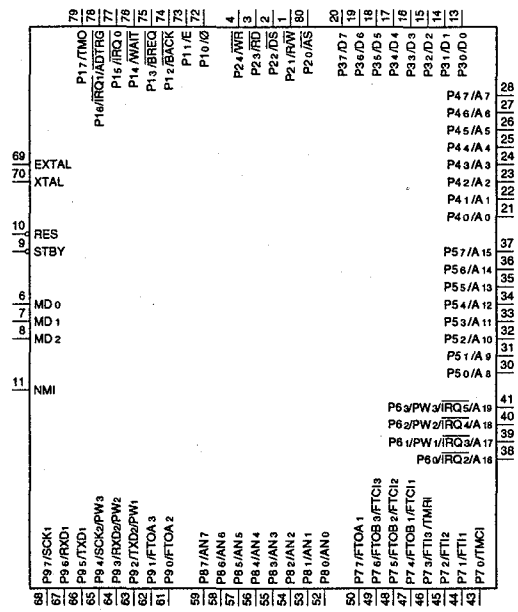

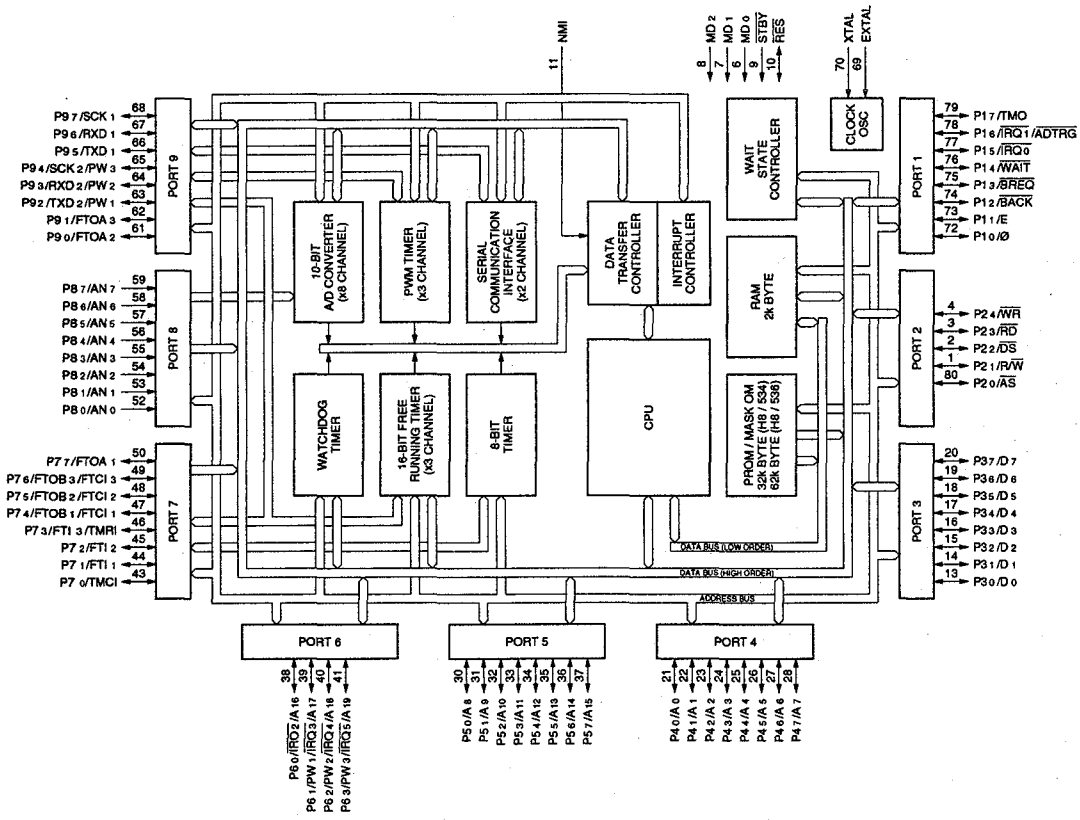

(AVDD, VDD=+5V)

PIN No.	I/O	SIGNAL	PIN No.	I/O	SIGNAL
1	I/O	P21/R/W	41	I/O	P63/PW3/IRQ5/A19
2	I/O	P22/DS	42	–	VDD
3	I/O	P23/RD	43	I/O	P70/TMCI
4	I/O	P24/WR	44	I/O	P71/FTI1
5	–	VDD	45	I/O	P72/FTI2
6	I	MD0	46	I/O	P73/FTI3/TMRI
7	I	MD1	47	I/O	P74/FTOB1/FTCI1
8	I	MD2	48	I/O	P75/FTOB2/FTCI2
9	I	STBY	49	I/O	P76/FTOB3/FTCI3
10	I/O	RES	50	I/O	P77/FTOA1
11	I	NMI	51	–	AGND
12	–	GND	52	I	P80/AN0
13	I/O	P30/D0	53	I	P81/AN1
14	I/O	P31/D1	54	I	P82/AN2
15	I/O	P32/D2	55	I	P83/AN3
16	I/O	P33/D3	56	I	P84/AN4
17	I/O	P34/D4	57	I	P85/AN5
18	I/O	P35/D5	58	I	P86/AN6
19	I/O	P36/D6	59	I	P87/AN7
20	I/O	P37/D7	60	–	AVDD
21	I/O	P40/A0	61	I/O	P90/FTOA2
22	I/O	P41/A1	62	I/O	P91/FTOA3
23	I/O	P42/A2	63	I/O	P92/TXD2/PW1
24	I/O	P43/A3	64	I/O	P93/RXD2/PW2
25	I/O	P44/A4	65	I/O	P94/SCK2/PW3
26	I/O	P45/A5	66	I/O	P95/TXD1
27	I/O	P46/A6	67	I/O	P96/RXD1
28	I/O	P47/A7	68	I/O	P97/SCK1
29	–	GND	69	I	EXTAL
30	I/O	P50/A8	70	I	XTAL
31	I/O	P51/A9	71	–	GND
32	I/O	P52/A10	72	I/O	P10/Ø
33	I/O	P53/A11	73	I/O	P11/E
34	I/O	P54/A12	74	I/O	P12/BACK
35	I/O	P55/A13	75	I/O	P13/BREQ
36	I/O	P56/A14	76	I/O	P14/WAIT
37	I/O	P57/A15	77	I/O	P15/IRQ0
38	I/O	P60/IRQ2/A16	78	I/O	P16/IRQ1/ADTRG
39	I/O	P61/PW1/IRQ3/A17	79	I/O	P17/TMO
40	I/O	P62/PW2/IRQ4/A18	80	I/O	P20/AS

INPUT

ADTRG	; EXTERNAL TRIGGER
AN0-AN7	; ANALOG DATA
BREQ	; BUS REQUEST
EXTAL	; CONNECTED TO CRYSTAL OSCILLATOR
FTCI1-FTCI3	; FRT COUNTER CLOCK (CHANNEL 1 TO 3)
FTI1-FTI3	; FRT INPUT CAPTURE (CHANNEL 1 TO 3)
IRQ0-IRQ5	; INTERRUPTION REQUEST
MD0-MD2	; MODE SETTING
NMI	; NON MASKABLE INTERRUPTION
P80-P87	; PORT 8
RXD1, 2	; RECEIVE DATA
STBY	; STANDBY
TMCI	; 8-BIT TIMER CLOCK
TMRI	; 8-BIT TIMER COUNTER RESET
WAIT	; WAIT
XTAL	; CONNECTED TO CRYSTAL OSCILLATOR

OUTPUT

A0-A19	; ADDRESS BUS
AS	; ADDRESS STROBE
BACK	; BUS REQUEST ACKNOWLEDGE
DS	; DATA STROBE
E	; ENABLE CLOCK
FTOA1-FTOA3	; FRT OUTPUT COMPARE A (CHANNEL 1 TO 3)
FTOB1-FTOB3	; FRT OUTPUT COMPARE B (CHANNEL 1 TO 3)
PW1-PW3	; PWM TIMER (CHANNEL 1 TO 3)
R/W	; READ/WRITE
RD	; READ
TMO	; 8-BIT TIMER
TXD1, 2	; SEND DATA
WR	; WRITE
Ø	; SYSTEM CLOCK

INPUT/OUTPUT

D0-D7	; DATA BUS
RES	; RESET
P10-P17	; PORT 1
P20-P24	; PORT 2
P30-P37	; PORT 3
P40-P47	; PORT 4
P50-P57	; PORT 5
P60-P63	; PORT 6
P70-P77	; PORT 7
P90-P97	; PORT 9
SCK1, 2	; SERIAL CLOCK

LM4040BIM3-5.0 (NS)
LM4040BIM3X-5.0

PRECISION MICROPOWER SHUNT VOLTAGE REFERENCE
— TOP VIEW —

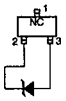

LT1252CS8 (LINEAR TECH)
LT1252CS8-E2

VIDEO AMPLIFIER
—TOP VIEW—

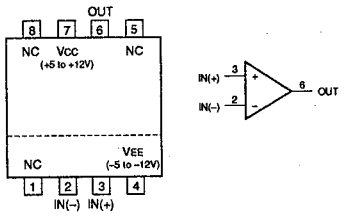

LT1253CS8-E2 (LINEAR TECH)

DUAL VIDEO AMPLIFIER
-TOP VIEW-

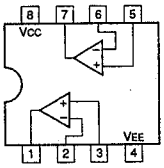

	VCC	VEE
SINGLE SUPPLY	+4 to +28V	GND
SPLIT SUPPLIES	+2 to +14V	–2 to –14V

MAX4420-CPA (MAXIM)

HIGH SPEED 6A SINGLE MOS FET DRIVER
-TOP VIEW-

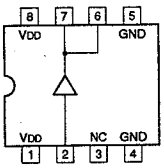

VDD ; +4.5 to +18V

M27C512-10F1

C-MOS 512K (65,536×8)-BIT ERASABLE PROM
-TOP VIEW-

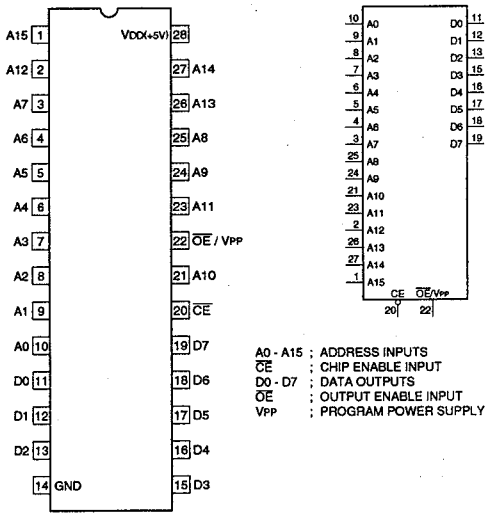

A0 - A15 ; ADDRESS INPUTS
$\overline{CE}$; CHIP ENABLE INPUT
D0 - D7 ; DATA OUTPUTS
$\overline{OE}$; OUTPUT ENABLE INPUT
VPP ; PROGRAM POWER SUPPLY

An	$\overline{CE}$	$\overline{OE}$/VPP	VDD	Dn	FUNCTION
AIN	0	0	+5V	DOUT	READ
AIN	0	1	+5V	HI-Z	OUTPUT DISABLE
X	1	X	+5V	HI-Z	STANDBY
AIN	0	+12.5V	+6V	DIN	PGM
AIN	0	0	+6V	DOUT	PGM VERIFY
X	1	+12.5V	+6V	HI-Z	PGM INH

0 ; LOW LEVEL
1 ; HIGH LEVEL
X ; DON'T CARE
HI-Z ; HIGH IMPEDANCE

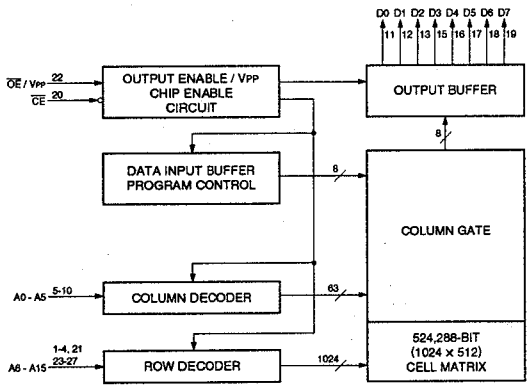

MC14001BF (MOTOROLA)
MC14001BFEL

C-MOS 2-INPUT NOR GATE
-TOP VIEW-

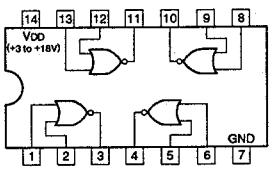

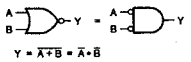

A	B	Y
0	0	1
0	1	0
1	0	0
1	1	0

0 ; LOW LEVEL
1 ; HIGH LEVEL

M51348AFP (MITSUBISHI)
M51348AFP-E1

POCKET TV IF SYSTEM
-TOP VIEW-

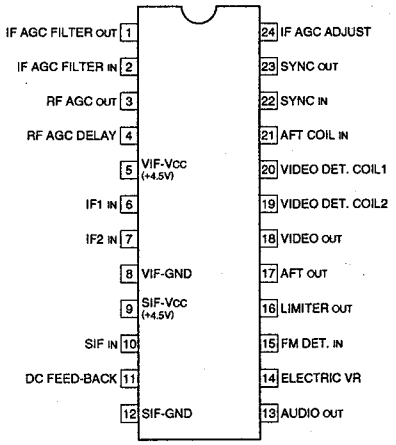

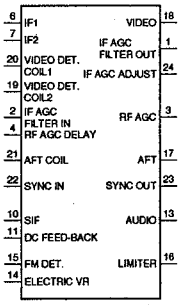

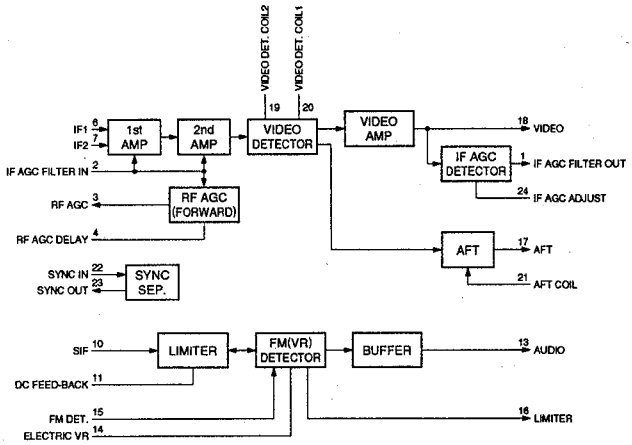

MC14011BF (MOTOROLA)
MC14011BFEL
TC4011BF (TOSHIBA)

C-MOS 2-INPUT NAND GATE
-TOP VIEW-

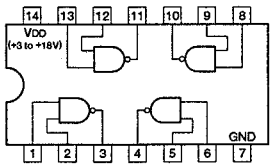

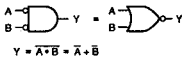

A	B	Y
0	0	1
0	1	1
1	0	1
1	1	0

0 ; LOW LEVEL
1 ; HIGH LEVEL

M52313SP (MITSUBISHI)

PLL VIF/SIF
— TOP VIEW —

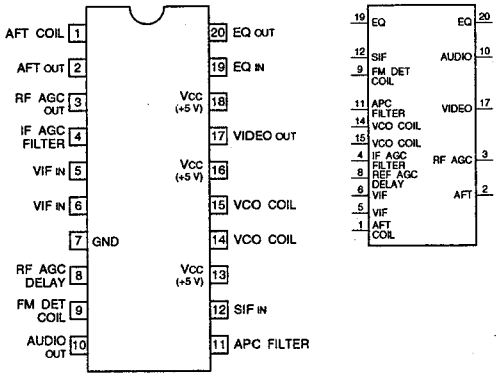

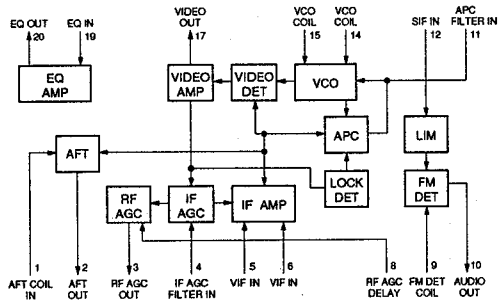

MAX202CSE (MAXIM)
MAX202CSE-T

RS-232 TRANSMITTER/RECEIVER
— TOP VIEW —

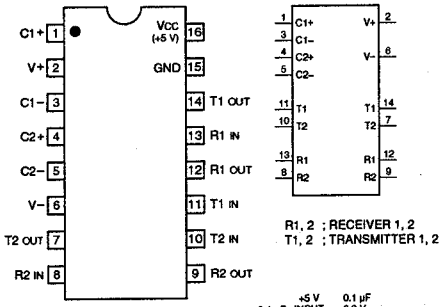

R1, 2 ; RECEIVER 1, 2
T1, 2 ; TRANSMITTER 1, 2

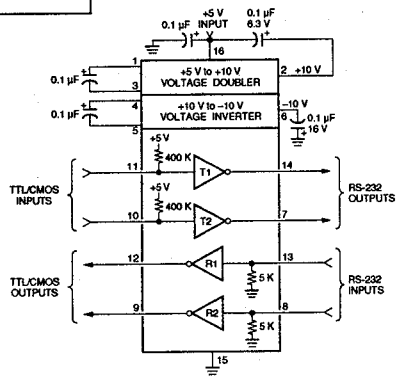

MB3759PF (FUJITSU)

PWM POWER CONTROL
-TOP VIEW-

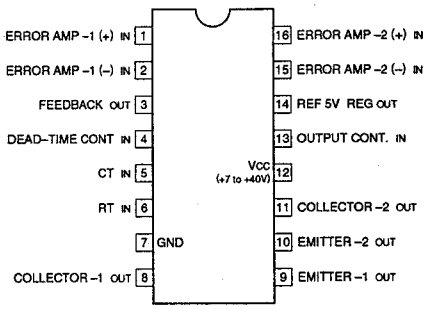

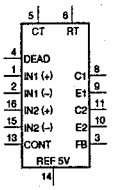

OUTPUT CONTROL	OUTPUT FUNCTION
0	PARALLEL
1	PUSH-PULL

0 ; GROUNDED
1 ; CONNECTED TO PIN14

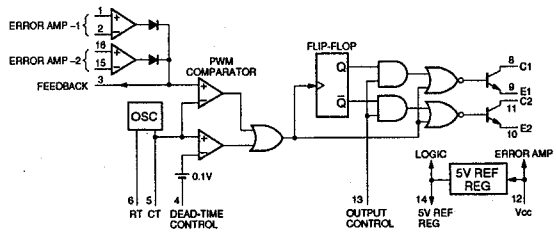

MC14051BF (MOTOROLA)
MC14051BFEL

C-MOS 8-CHANNEL ANALOG MULTIPLEXER/DEMULTIPLEXER
-TOP VIEW-

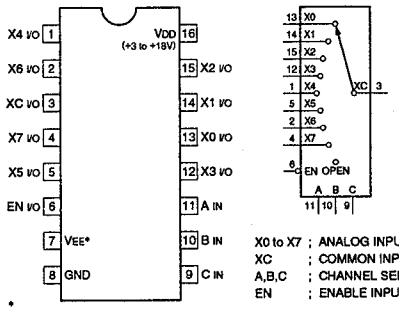

CONTROL INPUTS				SELECTED CHANNEL
EN	SELECT C	B	A	
0	0	0	0	X0
0	0	0	1	X1
0	0	1	0	X2
0	0	1	1	X3
0	1	0	0	X4
0	1	0	1	X5
0	1	1	0	X6
0	1	1	1	X7
1	X	X	X	OPEN

0 ; LOW LEVEL
1 ; HIGH LEVEL
X ; DON'T CARE

X0 to X7 ; ANALOG INPUTS/OUTPUTS
XC ; COMMON INPUT/OUTPUT
A,B,C ; CHANNEL SELECT INPUT
EN ; ENABLE INPUT

* VEE ; VDD−VEE=+3 to +18V

MC14528BF (MOTOROLA)
MC14528BFEL

C-MOS RETRIGGERABLE/RESETTABLE MMV
-TOP VIEW-

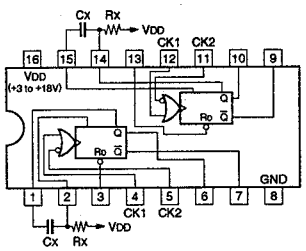

INPUTS			OUTPUTS	
CK1	CK2	RD	Q	$\bar{Q}$
↓	1	1	⌐	⌐
↓	0	1	Q	$\bar{Q}$
1	↑	1	Q	$\bar{Q}$
0	↑	1	⌐	⌐
X	X	0	0	1

0 ; LOW LEVEL
1 ; HIGH LEVEL
X ; DON'T CARE

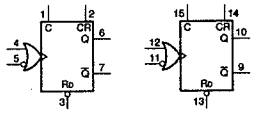

MC14520BF (MOTOROLA)
MC14520BFEL

C-MOS DUAL 4-BIT BINARY UP COUNTER
-TOP VIEW-

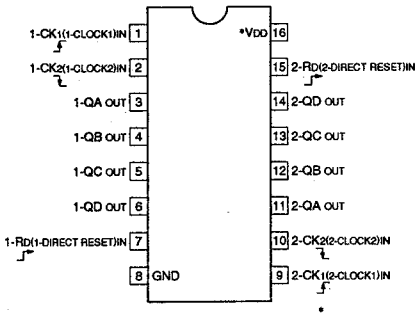

*

TYPE	VDD
HC4520	+2 to +6V
14520, 4520, 84520	+3 to +18V

STATE	OUTPUTS			
	QD	QC	QB	QA
0	0	0	0	0
1	0	0	0	1
2	0	0	1	0
3	0	0	1	1
4	0	1	0	0
5	0	1	0	1
6	0	1	1	0
7	0	1	1	1
8	1	0	0	0
9	1	0	0	1
10	1	0	1	0
11	1	0	1	1
12	1	1	0	0
13	1	1	0	1
14	1	1	1	0
15	1	1	1	1

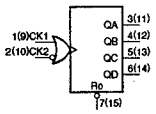

0 ; LOW LEVEL
1 ; HIGH LEVEL
X ; DON'T CARE

CK1	CK2	RD	ACTION
↓	1	0	INCREMENT COUNTER
0	↓	0	INCREMENT COUNTER
↑	X	0	NO CHANGE
X	↑	0	NO CHANGE
↓	0	0	NO CHANGE
1	↑	0	NO CHANGE
X	X	1	QA THRU QD = 0

NJM1496M (JRC)
NJM1496M-TE2

BALANCED MODULATOR/DEMODULATOR
-TOP VIEW-

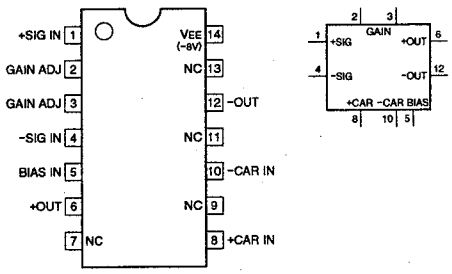

S-8054HN-CB-S (SEIKO I&E)
S-8054HN-CB-T1
S-80840ANUP-ED4-T2 (SEIKO I&E)3.92-4.08 V

C-MOS VOLTAGE DETECTOR WITH N-CHANNEL OPEN DRAIN OUTPUT
-TOP VIEW-

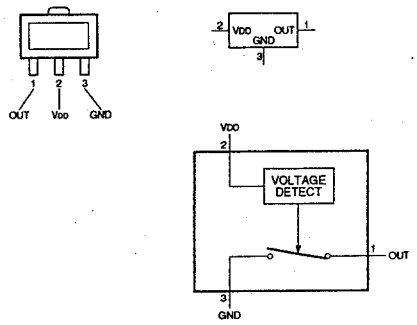

MC74HC4053F (MOTOROLA)
TC74HC4053AF(EL)

C-MOS TRIPLE 2-CHANNEL ANALOG MULTIPLEXER/DEMULTIPLEXER
-TOP VIEW-

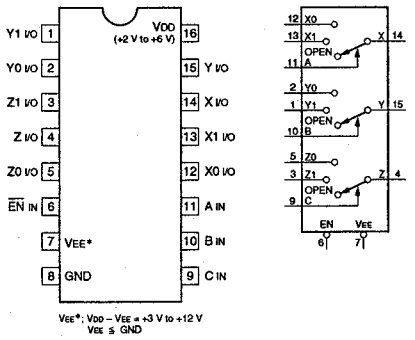

VEE*; VDD – VEE = +3 V to +12 V
VEE ≤ GND

CONTROL INPUTS				ON CHANNEL		
EN	SELECT					
	C	B	A			
0	0	0	0	Z0	Y0	X0
0	0	0	1	Z0	Y0	X1
0	0	1	0	Z0	Y1	X0
0	0	1	1	Z0	Y1	X1
0	1	0	0	Z1	Y0	X0
0	1	0	1	Z1	Y0	X1
0	1	1	0	Z1	Y1	X0
0	1	1	1	Z1	Y1	X1
1	X	X	X	OPEN		

0 ; LOW LEVEL
1 ; HIGH LEVEL
X ; DON'T CARE

MC34182DR2
MC34182M (MOTOROLA)
NJM2043M-D (JRC)
NJM2043M-D-TE2
NJM4556AM-TE2 (JRC)
NJM4558M-TE2
NJM4558V-TE2 (JRC)
NJM4560M (JRC)
NJM4560M-TE2
TL062CPS (TI)
TL062CPS-E05
TL062CPW (TI)
TL062CPW-E05
UPC4558G2 (NEC)
UPC812G2 (NEC)
UPC812G2-E2

DUAL OPERATIONAL AMPLIFIERS
(DUAL-SUPPLY TYPE)
-TOP VIEW-

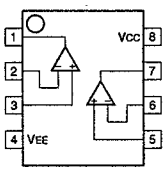

TYPE	VCC	VEE
062/072/082/4556A/ M5218/BA15218/ 33178/34182 TYPES	+2 to +16V	–2 to –16V
4580 TYPE	+2 to +18V	–2 to –18V
5532 TYPE	+3 to +20V	–3 to –20V
CXA1297 TYPE	+5 to +12V	–5 to –12V
M5219/M5220 TYPES	+5 to +22.5V	–5 to –22.5V
MC33077DR2	+2.5 to +18V	–2.5 to –18V
NJM2100 TYPE	+1 to +3.5V	–1 to –3.5V
OP-297 TYPE	+2 to +20V	–2 to –20V
OTHERS	+5 to +16V	–5 to –16V

NJM78L05UA (JRC)+5 V(100 mA)
NJM78L05UA-TE1

POSITIVE VOLTAGE REGULATOR
-SIDE VIEW-

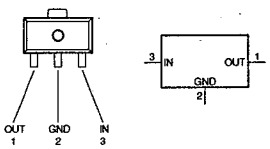

NJM567M (JRC)

TONE DECODER
-TOP VIEW-

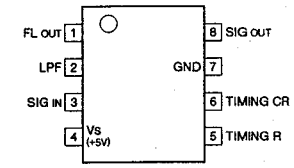

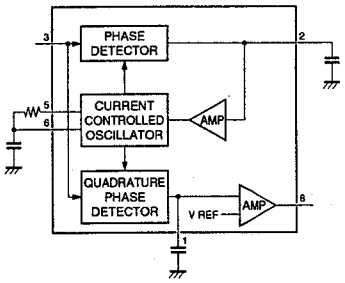

SC7S00F (MOTOROLA)
TC7S00F(TE85R)

C-MOS 2-INPUT NAND GATE
— TOP VIEW —

(SCALE 6/1)

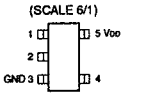

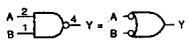

A	B	Y
0	0	1
0	1	1
1	0	1
1	1	0

0 ; LOW LEVEL
1 ; HIGH LEVEL

TYPE	VDD
7S00F 7S00FU	+2 to +6 V
4S11F 4SU11F	+3 to +18 V
7SH00FU	+2 to +5.5 V

SC7S04F (MOTOROLA)
TC7S04F(TE85R)
TC7S04FU(TE85R) (TOSHIBA)

C-MOS INVERTER

-TOP VIEW-

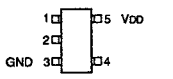

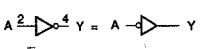

Y = $\overline{A}$

A	Y
0	1
1	0

0 ; LOW LEVEL
1 ; HIGH LEVEL

TYPE	VDD
7S04F 7SU04F 7SU04FU	+2 to +6V
4S69F 4SU69F	+3 to +18V
7SH04FU 7SHU04FU	+2 to +5.5V

SN74HC00ANS (TI)
SN74HC00ANS-E05
TC74VHC00FT(EL) (TOSHIBA)

C-MOS QUAD 2-INPUT NAND GATES
-TOP VIEW-

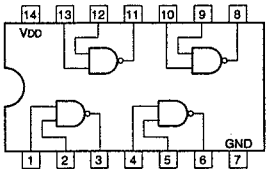

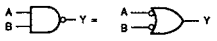

Y = $\overline{A \cdot B} = \overline{A} + \overline{B}$

A	B	Y
0	0	1
0	1	1
1	0	1
1	1	0

0 ; LOW LEVEL
1 ; HIGH LEVEL

NOTE:

TYPE	VDD
74AC/74VHC	+2 to +5.5V
74ACT/74HCT/74VHCT	+4.5 to +5.5V
LCX	+2 to +3.6V
OTHER TYPES	+2 to +6V

SN74HC04ANS (TI)
SN74HC04ANS-E05
TC74VHC04FT(EL) (TOSHIBA)

C-MOS HEX INVERTERS
-TOP VIEW-

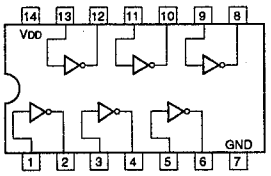

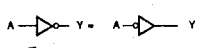

Y = $\overline{A}$

A	Y
0	1
1	0

0 ; LOW LEVEL
1 ; HIGH LEVEL

NOTE:

TYPE	VDD
74AC/74VHC/74VHCT	+2 to +5.5V
74ACT/74HCT	+4.5 to +5.5V
74LCX	+2 to +3.6V
OTHER TYPE	+2 to +6V

SN74HC10ANS (TI)
SN74HC10ANS-E05

C-MOS 3-INPUT NAND GATE
-TOP VIEW-

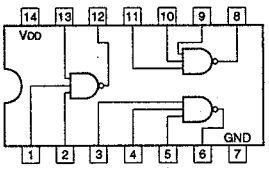

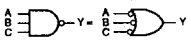

Y = $\overline{ABC} = \overline{A} + \overline{B} + \overline{C}$

A	B	C	Y
0	0	0	1
0	0	1	1
0	1	0	1
0	1	1	1
1	0	0	1
1	0	1	1
1	1	0	1
1	1	1	0

0 ; LOW LEVEL
1 ; HIGH LEVEL

NOTE :

TYPE	VDD
40H	+2 to +8V
74VHC	+2 to +5.5V
OTHERS	+2 to +6V

SN74HC138ANS (TI)
SN74HC138ANS-E05

C-MOS 3-TO-8 LINE DECODER / DEMULTIPLEXER
—TOP VIEW—

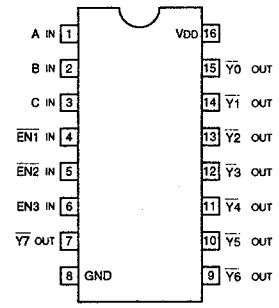

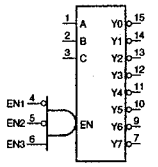

NOTE:

TYPE	VDD
74HCT138 TYPE	+5V
74ACT138 TYPE	+4.5 to +5.5V
TC74AC138 TYPE TC74VHC138	+2 to +5.5V
OTHER TYPES	+2 to +6V

INPUTS				OUTPUTS							
EN	C	B	A	Y7	Y6	Y5	Y4	Y3	Y2	Y1	Y0
0	X	X	X	1	1	1	1	1	1	1	1
1	0	0	0	1	1	1	1	1	1	1	0
1	0	0	1	1	1	1	1	1	1	0	1
1	0	1	0	1	1	1	1	1	0	1	1
1	0	1	1	1	1	1	1	0	1	1	1
1	1	0	0	1	1	1	0	1	1	1	1
1	1	0	1	1	1	0	1	1	1	1	1
1	1	1	0	1	0	1	1	1	1	1	1
1	1	1	1	0	1	1	1	1	1	1	1

EN = $\overline{EN1} \cdot \overline{EN2} \cdot EN3$

0 ; LOW LEVEL
1 ; HIGH LEVEL
X ; DON'T CARE

SN74HC393ANS (TI)
SN74HC393ANS-E05

C-MOS DUAL 4-BIT BINARY COUNTER
—TOP VIEW—

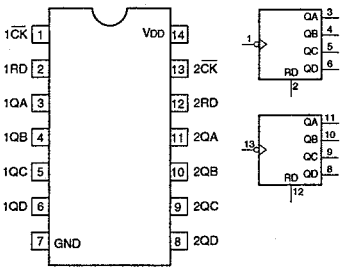

COUNT SEQUENCE

COUNT	QD	QC	QB	QA
0	0	0	0	0
1	0	0	0	1
2	0	0	1	0
3	0	0	1	1
4	0	1	0	0
5	0	1	0	1
6	0	1	1	0
7	0	1	1	1
8	1	0	0	0
9	1	0	0	1
10	1	0	1	0
11	1	0	1	1
12	1	1	0	0
13	1	1	0	1
14	1	1	1	0
15	1	1	1	1

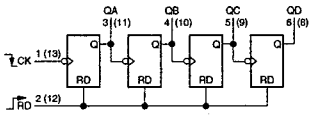

RESET/COUNT FUNCTION

RD	QD	QC	QB	QA
1	0	0	0	0
0	COUNT			

0 ; LOW LEVEL
1 ; HIGH LEVEL

NOTE:

TYPE	VDD
AC/VHC	+2 to +5.5 V
HC	+2 to +6 V

SN74HC14ANS (TI)
SN74HC14ANS-E05

C-MOS HEX SCHMITT TRIGGER INVERTERS
—TOP VIEW—

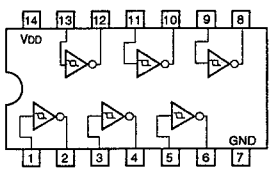

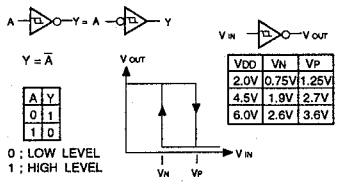

NOTE :

TYPE	VDD
TC74AC/VHC	+2V to +5.5V
OTHER TYPES	+2V to +6V

SN74HC595ADB-E05 (TI)
SN74HC595ANS (TI)
SN74HC595ANS-E05
TC74HC595AF(EL) (TOSHIBA)FLAT PACAGE

C-MOS 8-BIT SERIAL-INPUT/SERIAL- OR PARALLEL-OUTPUT
SHIFT REGISTER WITH LATCHED 3-STATE OUTPUT
—TOP VIEW—

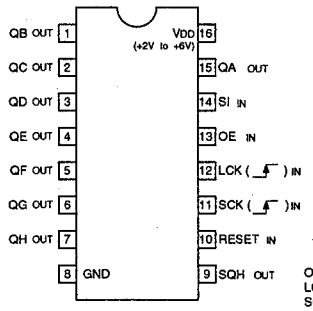

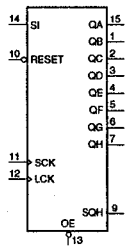

OE ; OUTPUT ENABLE INPUT
LCK ; LATCH CLOCK INPUT
SCK ; SHIFT CLOCK INPUT
RESET ; SHIFT-REGISTER RESET INPUT
SI ; SERIAL IN
QA-QH ; PARALLEL OUTPUT
SQH ; SERIAL OUT

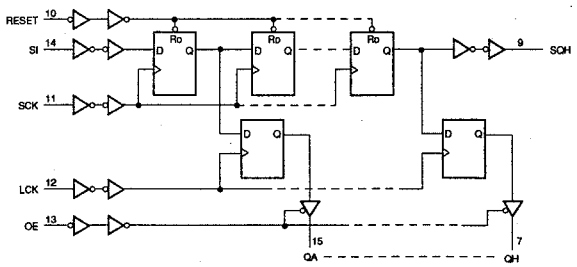

SN74HC158ANS (TI)
SN74HC158ANS-E05

C-MOS 2-LINE-TO-1-LINE INVERTED DATA SELECTOR/MULTIPLEXER
-TOP VIEW-

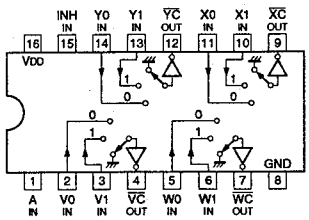

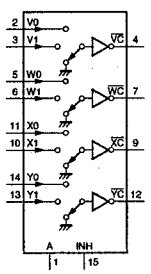

CONT. IN		ON
INH	A	CHANNEL
0	0	0
0	1	1
1	X	GND

0 ; LOW LEVEL
1 ; HIGH LEVEL
X ; DON'T CARE

NOTE :

TYPE	VDD
74AC/HC	+2 to +6V
74ACT/HCT	+5V

SN74LS123NS (TI)
SN74LS123NS-E05

TTL RETRIGGERABLE MONOSTABLE MULTIVIBRATORS WITH DIRECT RESET
—TOP VIEW—

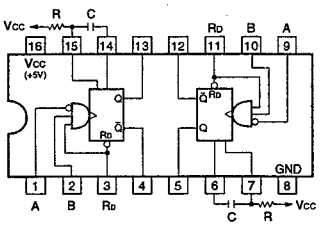

INPUTS			OUTPUTS	
RD	A	B	Q	$\overline{Q}$
0	X	X	0	1
X	1	X	0	1
X	X	0	0	1
1	0	↑	⎍	⎍
1	↓	1	⎍	⎍
↑	0	1	⎍	⎍

0 ; LOW LEVEL
1 ; HIGH LEVEL
X ; DON'T CARE

OUTPUT PULSE WIDTH

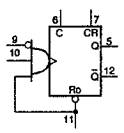

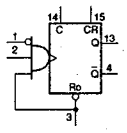

'123 ; $T_W = 0.28\left(1+\frac{700}{R}\right)CR$
'L123; $T_W = 0.33\left(1+\frac{700}{R}\right)CR$

'123 ; $T_W = 0.25\left(1+\frac{700}{R}\right)CR$
'L123; $T_W = 0.29\left(1+\frac{700}{R}\right)CR$

'LS123; $T_W = 0.45CR$

TC4081BF (TOSHIBA)

C-MOS 2-INPUT AND GATE
-TOP VIEW-

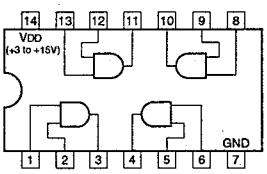

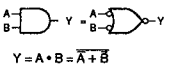

A	B	Y
0	0	0
0	1	0
1	0	0
1	1	1

0 ; LOW LEVEL
1 ; HIGH LEVEL

TC4S66F (TOSHIBA)
TC4S66F(TE85R)

C-MOS BILATERAL ANALOG SWITCH
—TOP VIEW—

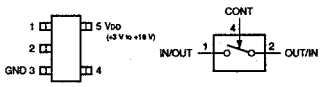

CONT	SWITCH
0	OFF
1	ON

0 ; LOW LEVEL
1 ; HIGH LEVEL

TA8129Z (TOSHIBA)

FM IF SYSTEM (DIFFERENTIAL PEAK DETECT)
— SIDE VIEW —

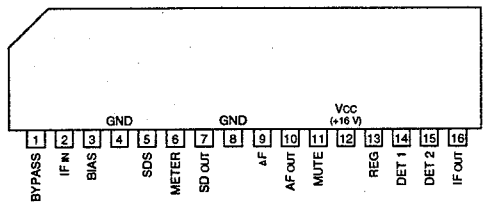

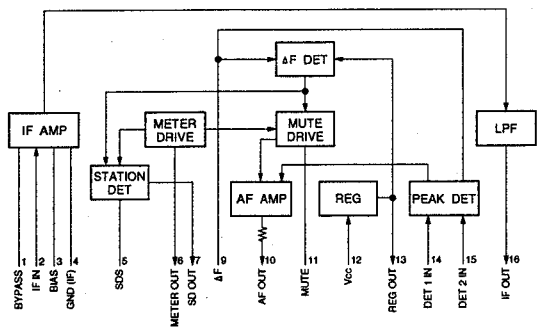

TC4W53F (TOSHIBA)(5.0 x 3.1)
TC4W53F(TE12R)
TC4W53FU (TOSHIBA)
TC4W53FU(TE12R)

C-MOS 2-CHANNEL MULTIPLEXER / DEMULTIPLEXER

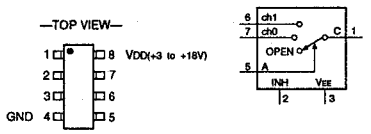

CONT.INPUT		ON
INH	A	CHANNEL
0	0	ch0
0	1	ch1
1	X	OPEN

0 ; LOW LEVEL
1 ; HIGH LEVEL
X ; DON'T CARE

TC4049BF (TOSHIBA)

C-MOS INVERTING TYPE BUFFER / CONVERTER
-TOP VIEW-

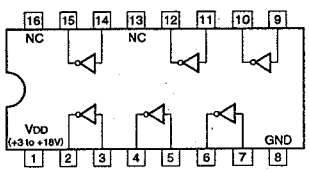

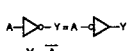

A	Y
0	1
1	0

0 ; LOW LEVEL
1 ; HIGH LEVEL

TC74HC221AF (TOSHIBA)
TC74HC221AF(EL)

C-MOS MONOSTABLE MULTIVIBRATOR WITH SCHMITT TRIGGER INPUT
-TOP VIEW-

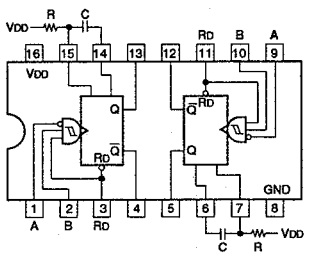

INPUTS			OUTPUTS	
RD	A	B	Q	$\overline{Q}$
0	X	X	0	1
X	1	X	0	1
X	X	0	0	1
1	0	↑	⎍	⎍
1	↓	1	⎍	⎍
↑	0	1	⎍	⎍

0 ; LOW LEVEL
1 ; HIGH LEVEL
X ; DON'T CARE

OUTPUT PULSE WIDTH = 0.7CR

NOTE:

TYPE	VDD
74AC/74VHC	+2 to +5.5V
74HCT	+4.5 to +5.5V
74HC	+2 to +6V

TC74HC151AF(EL) (TOSHIBA)

C-MOS 8-LINE-TO-1-LINE DATA SELECTOR/MULTIPLEXER
—TOP VIEW—

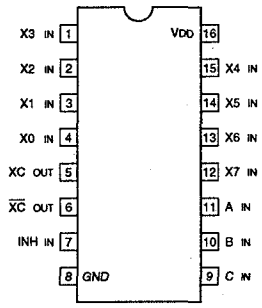

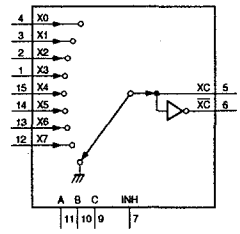

CONTROL INPUTS				ON CHANNEL
INH	C	B	A	
0	0	0	0	0
0	0	0	1	1
0	0	1	0	2
0	0	1	1	3
0	1	0	0	4
0	1	0	1	5
0	1	1	0	6
0	1	1	1	7
1	X	X	X	GND

0 ; LOW LEVEL
1 ; HIGH LEVEL
X ; DON'T CARE

NOTE:

TYPE	VDD
HC	+2V to +6V
AC/VHC	+2V to +5.5V
HCT/ACT/FCT	+5V

TC74HC4051AF(EL) (TOSHIBA)

C-MOS 8-CHANNEL ANALOG MULTIPLEXER/DEMULTIPLEXER
—TOP VIEW—

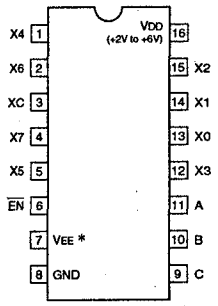

VEE *; VDD - VEE=+3V to +12V

CONTROL INPUTS					SELECTED CHANNEL
EN	SELECT				
	C	B	A	
0	0	0	0	X0
0	0	0	1	X1
0	0	1	0	X2
0	0	1	1	X3
0	1	0	0	X4
0	1	0	1	X5
0	1	1	0	X6
0	1	1	1	X7
1	X	X	X	OPEN

0 ; LOW LEVEL
1 ; HIGH LEVEL
X ; DON'T CARE

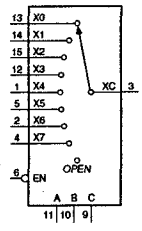

X0-X7 ; ANALOG INPUTS/OUTPUTS
XC ; COMMON INPUT/OUTPUT
A, B, C ; CHANNEL SELECT INPUT
EN ; ENABLE INPUT

TC74HC4072AF (TOSHIBA)

C-MOS 4-INPUT OR GATE
-TOP VIEW-

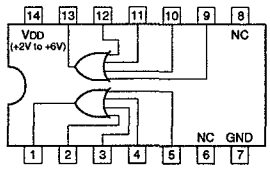

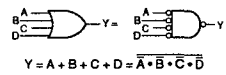

$Y = A + B + C + D = \overline{\overline{A} \cdot \overline{B} \cdot \overline{C} \cdot \overline{D}}$

D	C	B	A	Y
0	0	0	0	0
X	X	X	1	1
X	X	1	X	1
X	1	X	X	1
1	X	X	X	1

0 ; LOW LEVEL
1 ; HIGH LEVEL
X ; DON'T CARE

TC74HC4538AFT(EL) (TOSHIBA)

C-MOS DUAL RETRIGGERABLE / NON-RETRIGGERABLE MONOSTABLE MULTIVIBRATOR
-TOP VIEW -

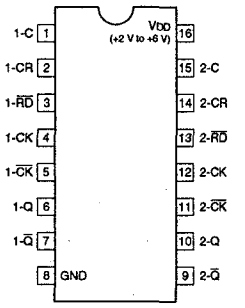

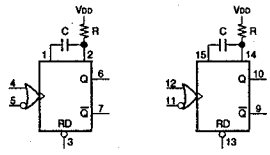

OUTPUT PULSE WIDTH = k · C · R

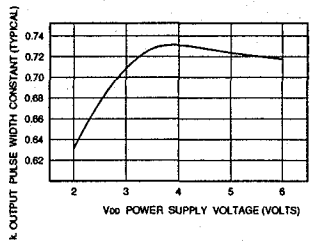

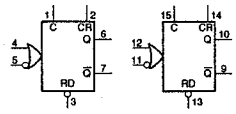

RETRIGGERABLE M. M. V

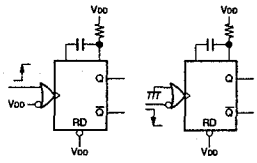

NON-RETRIGGERABLE M. M. V

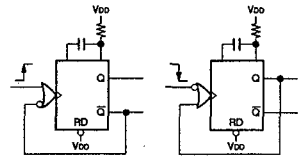

TC74HC74AF(EL) (TOSHIBA)
TC74VHC74FT(EL) (TOSHIBA)

C-MOS DUAL D-TYPE FLIP-FLOPS WITH DIRECT SET/RESET
-TOP VIEW-

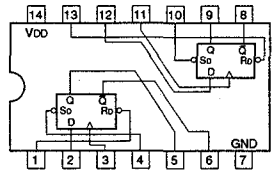

INPUTS				OUTPUTS	
$\overline{SD}$	$\overline{RD}$	CK	D	Qn+1	$\overline{Qn+1}$
0	1	X	X	1	0
1	0	X	X	0	1
0	0	X	X	1	1
1	1	↓	1	1	0
1	1	↓	0	0	1
1	1	0	X	Qn	$\overline{Qn}$

0 ; LOW LEVEL
1 ; HIGH LEVEL
X ; DON'T CARE

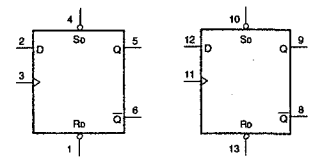

NOTE:

TYPE	VDD
74HCT/74ACT	+4.5 to +5.5V
74LVC	+2.7 to +3.6V
74AC/74VHC	+2 to +5.5V
OTHERS	+2 to +6V

TC74VHC11F (TOSHIBA)
TC74VHC11F(EL)

C-MOS 3-INPUT POSITIVE-AND GATE
—TOP VIEW—

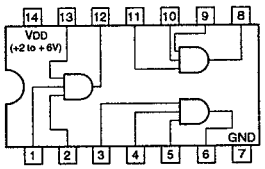

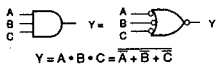

A	B	C	Y
0	0	0	0
0	0	1	0
0	1	0	0
0	1	1	0
1	0	0	0
1	0	1	0
1	1	0	0
1	1	1	1

0 ; LOW LEVEL
1 ; HIGH LEVEL

NOTE:

TYPE	VDD
TC74VHC11	+2V to + 5.5V
OTHER TYPES	+2V to + 6V

TLC274CNS (TI)
TLC274CNS-E05
TLC274CPW (TI)
TLC274CPW-E05

C-MOS OPERATIONAL AMPLIFIER
—TOP VIEW—

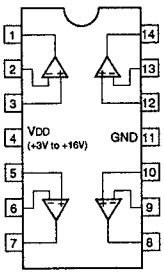

TC7W02F (TOSHIBA)
TC7W02FU(TE12R)

C-MOS DUAL 2-INPUT NOR GATE
—TOP VIEW—

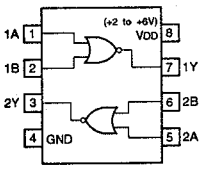

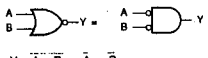

A	B	Y
0	0	1
0	1	0
1	0	0
1	1	0

0 ; LOW LEVEL
1 ; HIGH LEVEL

UC3854AN (UNITRODE)

POWER FACTOR CONTROLLER
—TOP VIEW—

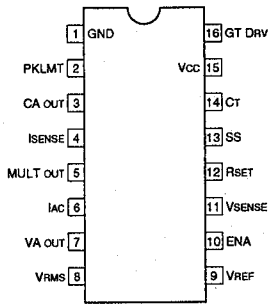

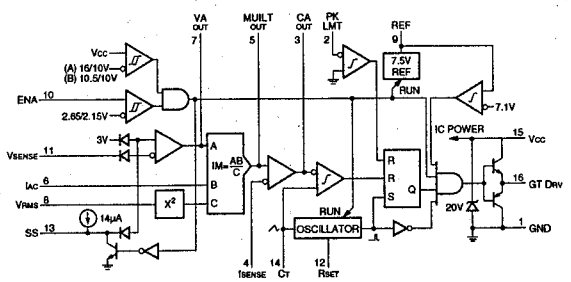

TLC272CPS (TI)
TLC272CPS-E05
TLC272CPW-E05 (TI)

C-MOS DUAL OPERATIONAL AMPLIFIERS
(SINGLE-SUPPLY TYPE)
–TOP VIEW–

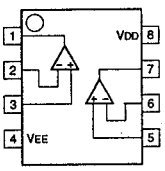

TYPE	VDD - VEE
LMC662 TYPE	+5 to +15V
OTHERS	+3 to +16V

TE7751 (TKE)

C-MOS SUPER I/O EXPANDER (8 bit × 9 ch)

- TOP VIEW -

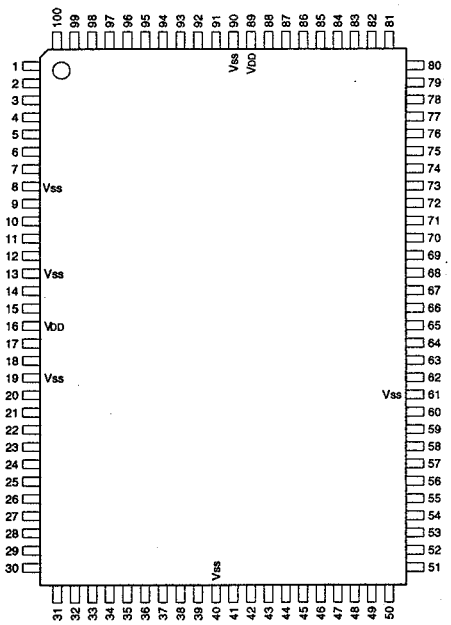

PIN No.	I/O	SIGNAL	PIN No.	I/O	SIGNAL	PIN No.	I/O	SIGNAL	PIN No.	I/O	SIGNAL
1	I/O	P81	26	I/O	P16	51	I/O	P46	76	I/O	P52
2	I/O	P82	27	I/O	P17	52	I/O	P47	77	I/O	P53
3	I/O	P83	28	I/O	P20	53	I/O	D0	78	I/O	P54
4	I/O	P84	29	I/O	P21	54	I/O	D1	79	I/O	P55
5	I/O	P85	30	I/O	P22	55	I/O	D2	80	I/O	P56
6	I/O	P86	31	I/O	P23	56	I/O	D3	81	I/O	P57
7	I/O	P87	32	I/O	P24	57	I/O	D4	82	I/O	P60
8	–	Vss	33	I/O	P25	58	I/O	D5	83	I/O	P61
9	I/O	P90	34	I/O	P26	59	I/O	D6	84	I/O	P62
10	I/O	P91	35	I/O	P27	60	I/O	D7	85	I/O	P63
11	I/O	P92	36	I/O	P30	61	–	Vss	86	I/O	P64
12	I/O	P93	37	I/O	P31	62	I	$\overline{RESET}$	87	I/O	P65
13	–	Vss	38	I/O	P32	63	I	$\overline{CS}$	88	I/O	P66
14	I/O	P94	39	I/O	P33	64	I	$\overline{RD}/\overline{RW}$	89	–	VDD
15	I/O	P95	40	–	Vss	65	I	$\overline{WR}/\overline{MEN}$	90	–	Vss
16	–	VDD	41	I/O	P34	66	I	A0	91	I/O	P67
17	I/O	P96	42	I/O	P35	67	I	A1	92	I/O	P70
18	I/O	P97	43	I/O	P36	68	I	A2	93	I/O	P71
19	–	Vss	44	I/O	P37	69	I	A3	94	I/O	P72
20	I/O	P10	45	I/O	P40	70	I	IOS0	95	I/O	P73
21	I/O	P11	46	I/O	P41	71	I	IOS1	96	I/O	P74
22	I/O	P12	47	I/O	P42	72	I	IOS2	97	I/O	P75
23	I/O	P13	48	I/O	P43	73	I	MS	98	I/O	P76
24	I/O	P14	49	I/O	P44	74	I/O	P50	99	I/O	P77
25	I/O	P15	50	I/O	P45	75	I/O	P51	100	I/O	P80

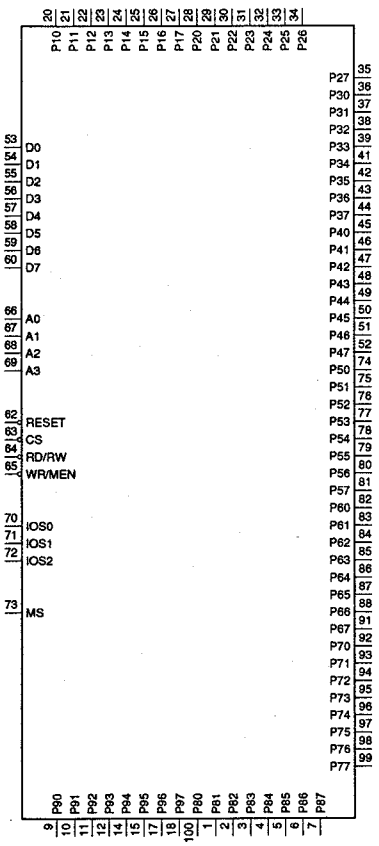

INPUT

A0-A3	; ADDRESS INPUT
CS	; CHIP SELECT
IOS0-2	; I/O SELECT
MS	; MODE SELECT
$\overline{RD}/\overline{RW}$	; READ/WRITE
RESET	; RESET
$\overline{WR}/\overline{MEN}$	; WRITE/MOTOROLA ENABLE

INPUT/OUTPUT

D0-7	; DATA BUS
P10-17	; I/O PORT 1
P20-27	; I/O PORT 2
P30-37	; I/O PORT 3
P40-47	; I/O PORT 4
P50-57	; I/O PORT 5
P60-67	; I/O PORT 6
P70-77	; I/O PORT 7
P80-87	; I/O PORT 8
P90-97	; I/O PORT 9

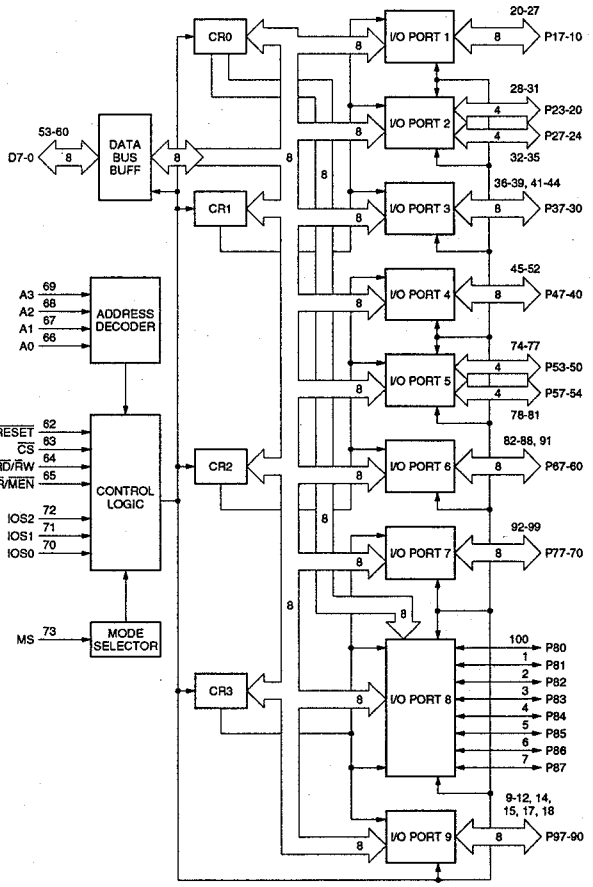

UPA101G (NEC)
UPA101G-E1

TRANSISTOR ARRAY
—TOP VIEW—

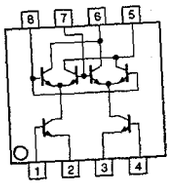

UPC1093T (NEC)

REGULATOR (VARIABLE VOLTAGE SHUNT)
-TOP VIEW-

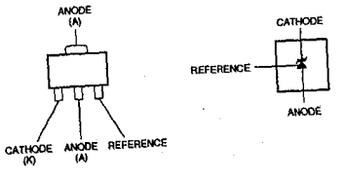

UPC311G2 (NEC)
UPC311G2-E2

VOLTAGE COMPARATOR
-TOP VIEW-

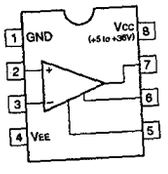

UPC319G2-E2 (NEC)

DUAL VOLTAGE COMPARATOR
-TOP VIEW-

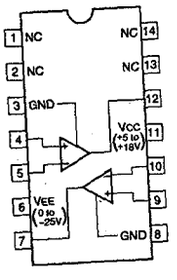

UPC324G2 (NEC)

QUAD OPERATIONAL AMPLIFIERS
-TOP VIEW-

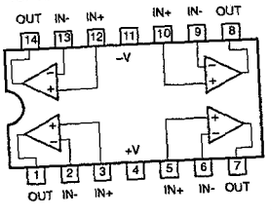

	+V	-V
SINGLE SUPPLY	+3 to +32 V	GND
DUAL SUPPLIES	+1.5 to +16 V	-1.5 to -16 V

UPC393G2 (NEC)
UPC393G2-E2

DUAL VOLTAGE COMPARATORS
—TOP VIEW—

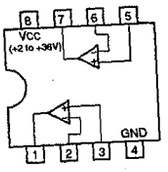

UPC78L15J (NEC)+15 V(100 mA)

POSITIVE VOLTAGE REGULATOR

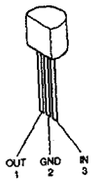

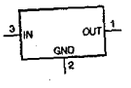

UPD71051GB-10-3B4 (NEC)

C-MOS SERIAL CONTROLLER
-TOP VIEW-

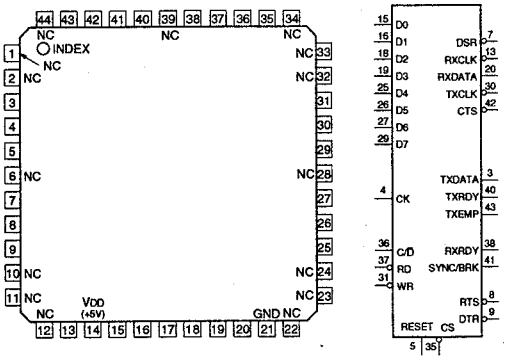

PIN No.	I/O	SYMBOL	PIN No.	I/O	SYMBOL	PIN No.	I/O	SYMBOL	PIN No.	I/O	SYMBOL
1	—	NC	12	—	NC	23	—	NC	34	—	NC
2	—	NC	13	I	$\overline{RXCLK}$	24	—	NC	35	I	$\overline{CS}$
3	O	TXDATA	14	—	VDD(+5V)	25	I/O	D4	36	I	C/$\overline{D}$
4	I	CK	15	I/O	D0	26	I/O	D5	37	I	$\overline{RD}$
5	I	RESET	16	I/O	D1	27	I/O	D6	38	O	RXRDY
6	—	NC	17	—	IC	28	—	NC	39	—	NC
7	I	DSR	18	I/O	D2	29	I/O	D7	40	O	TXRDY
8	O	$\overline{RTS}$	19	I/O	D3	30	I	$\overline{TXCLK}$	41	I/O	SYNC/BRK
9	O	$\overline{DTR}$	20	I	RXDATA	31	I	$\overline{WR}$	42	I	$\overline{CTS}$
10	—	NC	21	—	GND	32	—	NC	43	O	TXEMP
11	—	NC	22	—	NC	33	—	NC	44	—	NC

CK ; CLOCK INPUT
CS ; CHIP SELECT INPUT
CTS ; CLEAR TO SEND OUTPUT
C/$\overline{D}$; CONTROL/DATA SELECT INPUT
D0-D7 ; DATA INPUTS/OUTPUTS
DSR ; DATA SET READY INPUT
DTR ; DATA TERMINAL READY OUTPUT
TXCLK ; TRANSMITTER CLOCK INPUT
TXDATA ; TRANSMIT DATA OUTPUT
TXEMP ; TRANSMITTER EMPTY OUTPUT
TXRDY ; TRANSMIT READY OUTPUT
RD ; READ STROBE INPUT
RESET ; RESET INPUT
RTS ; REQUEST TO SEND OUTPUT
RXCLK ; RECEIVER CLOCK INPUT
RXDATA ; RECEIVE DATA INPUT
RXRDY ; RECEIVER READY OUTPUT
SYNC/BRK ; SYNCHRONIZATION/BREAK INPUT/OUTPUT
WR ; WRITE STROBE INPUT

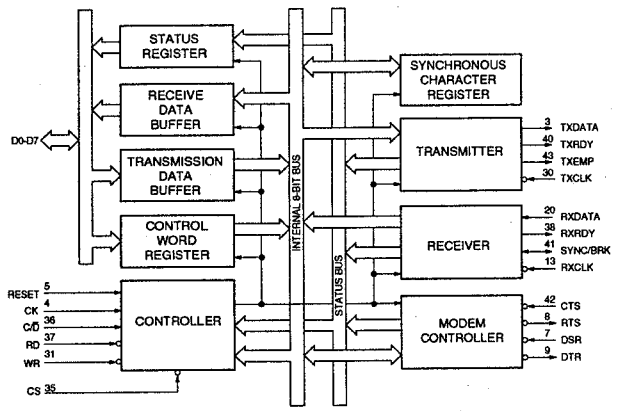

CXB1341R (SONY)

SERIAL DIGITAL INTERFACE TRANSMISSION ENCODER
—TOP VIEW—

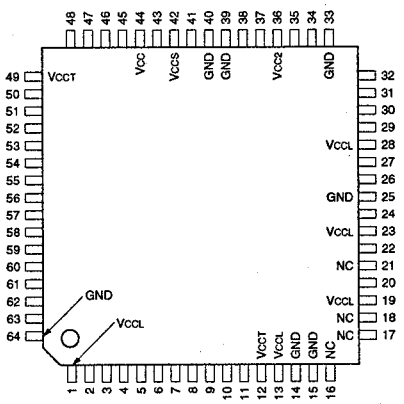

PIN NO.	I/O	SIGNAL	PIN NO.	I/O	SIGNAL	PIN NO.	I/O	SIGNAL	PIN NO.	I/O	SIGNAL
1	—	VCCL	17	—	NC	33	—	GND	49	—	VCCT
2	I	D1X	18	—	NC	34	I	MOD0	50	I	D8X
3	I	D1Y	19	—	VCCL	35	I	MOD1	51	I	D8Y
4	I	D0X	20	I	MDS	36	—	VCC2	52	I	D7X
5	I	D0Y	21	—	NC	37	O	LST	53	I	D7Y
6	I	PCX	22	I	BCAP	38	I	THRU	54	I	D6X
7	I	PCY	23	—	VCCL	39	—	GND	55	I	D6Y
8	I	SCKX	24	I	ICP	40	—	GND	56	I	D5X
9	I	SCKY	25	—	GND	41	O	SX	57	I	D5Y
10	I	TEST	26	O	CPX	42	—	VCCS	58	I	D4X
11	I	RESET	27	O	CPY	43	O	SY	59	I	D4Y
12	—	VCCT	28	—	VCCL	44	—	VCCL	60	I	D3X
13	—	VCCL	29	I	FSR0	45	I	ETS	61	I	D3Y
14	—	GND	30	I	FSR1	46	O	PCK	62	I	D2X
15	—	GND	31	I	FSR2	47	I	D9X	63	I	D2Y
16	—	NC	32	I	FSR3	48	I	D9Y	64	—	GND

INPUT
BCAP : EXTERNAL CAPACITOR FOR VCO
D9X - D0X : POSITIVE PARALLEL DATA
D9Y - D0Y : NEGATIVE PARALLEL DATA
ETS : 8-BIT/10-BIT SELECT (L = 8-BIT, H OR OPEN = 10-BIT)
FSR0 - FSR3 : EXTERNAL RESISTOR FOR SETTING THE FREE-RUN FREQUENCY OF VCO
ICP : EXTERNAL RESISTOR FOR CHARGE PUMP
MDS : TEST
MOD0, MOD1 : VCO RATE SELECT
PCX : POSITIVE PARALLEL CLOCK
PCY : NEGATIVE PARALLEL CLOCK
RESET : PLL RESET
SCKX, SCKY : TEST
TEST : TEST
THRU : TEST

OUTPUT
LST : PLL LOCK STATUS
PCK : PARALLEL CLOCK
CPX, CPY : CHARGE PUMP
SX, SY : EXTERNAL RESISTOR FOR SERIAL DIFFERENTIAL

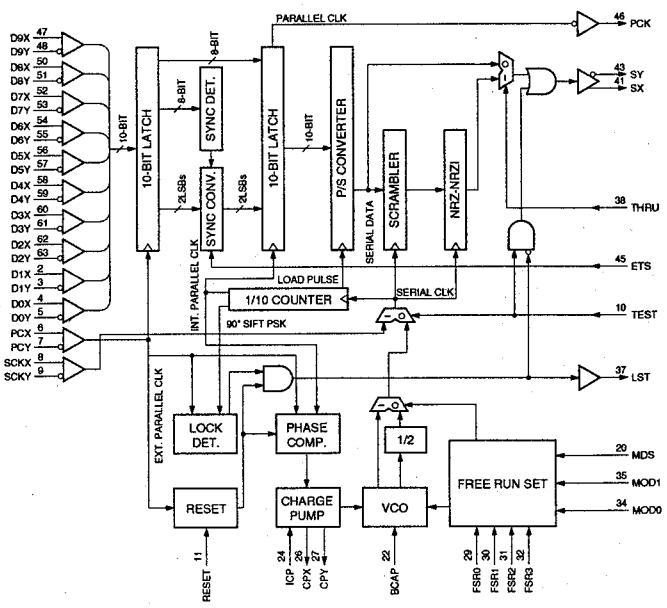

AK5340-VS (ASAHIKASEI MICRO)
AK5340-VS-E1

C-MOS 18-BIT 2 CHANNEL A/D CONVERTER

—TOP VIEW—

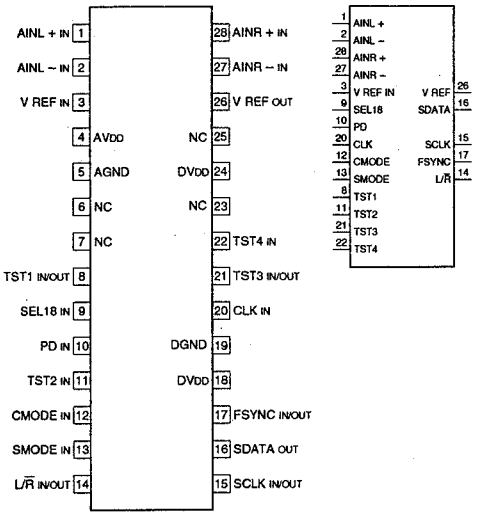

AVDD, AGND : FOR ANALOG BLOCK
DVDD, DGND : FOR DIGITAL BLOCK

INPUT

AINL +	; L-CH ANALOG POSITIVE INPUT
AINL –	; L-CH ANALOG NEGATIVE INPUT
AINR +	; R-CH ANALOG POSITIVE INPUT
AINR –	; R-CH ANALOG NEGATIVE INPUT
CLK	; MASTER CLOCK (CMODE = H : 384 fs) (CMODE = L : 256 fs)
CMODE	; MASTER CLOCK SELECT (L : CLK = 256 fs, 12.288 MHz @fs = 48 kHz) (H : CLK = 384 fs, 18.432 MHz @fs = 48 kHz)
PD	; POWER DOWN FOR DIGITAL SECTION
SEL 18	; 18/16 BIT SELECT (L : 16-BIT, H : 18-BIT)
SMODE	; INTERFACE CLOCK SELECT (L : SUB MODE) (H : MASTER MODE)
TST 2, 4	; TEST
V REF IN	; REFERENCE VOLTAGE

OUTPUT

SDATA	; SERIAL DATA
V REF	; REFERENCE VOLTAGE (–2.5V)

INPUT/OUTPUT

FSYNC	; FRAME SYNC CLOCK (SUB MODE : FSYNC INPUT) (MASTER MODE : FSYNC OUTPUT)
L/R	; INPUT CHANNEL SELECT (SUB MODE : fs CLK INPUT) (MASTER MODE : fs CLK OUTPUT)
SCLK	; SERIAL DATA CLOCK (SUB MODE : SCLK INPUT) (MASTER MODE : SCLK OUTPUT)
TST 1, 3	; TEST

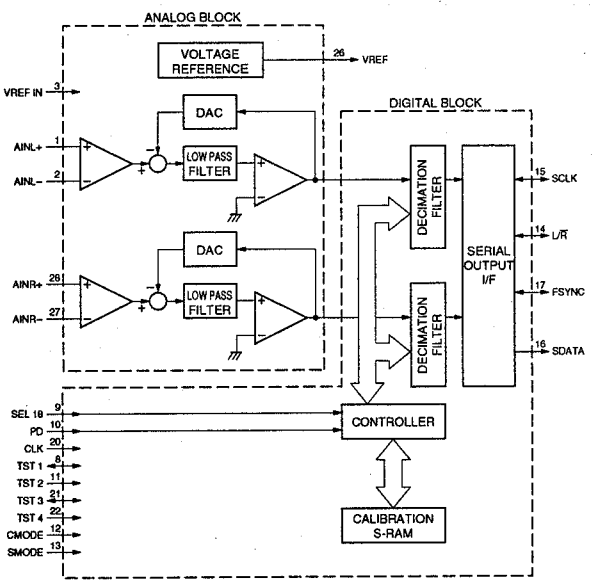

X24C02S-T1 (XICOR)(2 K-BIT)

C-MOS SERIAL EEPROM

—TOP VIEW—

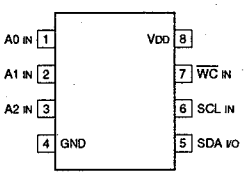

INPUT

A0 - A2 : ADDRESS
SCL : SERIAL CLOCK
$\overline{WC}$: WRITE CONTROL

INPUT/OUTPUT

SDA : SERIAL DATA

NOTE :

TYPE	PIN 7
NM24C16	NC
X24C02	$\overline{WC}$
X24C04	TEST

CXD606-101R (SONY)

RATE CONVERTER FOR 3CCD CAMERA
—TOP VIEW—

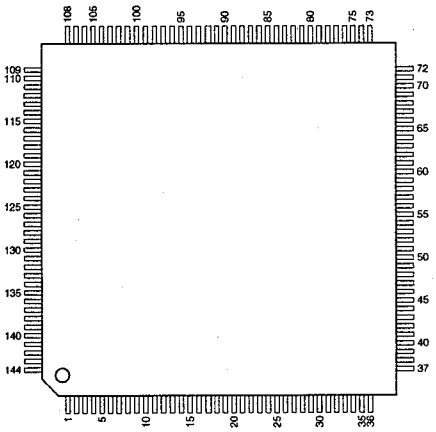

PIN NO.	I/O	SIGNAL	PIN NO.	I/O	SIGNAL	PIN NO.	I/O	SIGNAL	PIN NO.	I/O	SIGNAL
1	—	Vcc	37	—	Vcc	73	—	Vcc	109	—	Vcc
2	—	GND	38	—	GND	74	—	GND	110	—	GND
3	O	VCR5	39	I	PB	75	I/O	CCB7	111	O	DHD
4	O	VCR6	40	I	PS	76	I/O	CCB6	112	O	DVD
5	O	VCR7	41	I	TSTDIN4	77	I/O	CCB5	113	O	DSYNC
6	O	VCR8	42	I	TSTDIN3	78	I/O	CCB4	114	O	DCF
7	O	VCR9	43	I	TSTDIN2	79	I/O	CCB3	115	O	DBLKG
8	—	GND	44	I	TSTDIN1	80	I/O	CCB2	116	I/O	VYC0
9	—	GND	45	—	GND	81	—	GND	117	—	GND
10	I	VCRBCNT	46	I	CK1D	82	I/O	CCB1	118	I/O	VYC1
11	I	TSTDIN11	47	—	GND	83	I/O	CCB0	119	I/O	VYC2
12	I	TSTDIN10	48	I	TSTDIN0	84	I/O	CCR10	120	I/O	VYC3
13	I	TSTDIN9	49	I	$\overline{\text{TSTRST}}$	85	I/O	CCR9	121	I/O	VYC4
14	I	TSTDIN8	50	I	TSTSEL	86	I/O	CCR8	122	I/O	VYC5
15	I	TSTDIN7	51	—	GND	87	I/O	CCR7	123	I/O	VYC6
16	I	TSTDIN6	52	I	CK3D	88	I/O	CCR6	124	I/O	VYC7
17	I	TSTDIN5	53	—	GND	89	I/O	CCR5	125	I/O	VYC8
18	—	Vcc	54	—	Vcc	90	—	Vcc	126	—	Vcc
19	—	GND	55	—	GND	91	—	GND	127	—	GND
20	—	GND	56	O	CK2COMP	92	I/O	CCR4	128	I/O	VYC9
21	I/O	SDA3	57	I	CK2D	93	I/O	CCR3	129	I/O	VCRB0
22	I/O	SDA2	58	O	CK2COMN	94	I/O	CCR2	130	I/O	VCRB1
23	I/O	SDA1	59	—	GND	95	I/O	CCR1	131	I/O	VCRB2
24	I/O	SDA0	60	O	VCK	96	I/O	CCR0	132	I/O	VCRB3
25	I	SCK	61	—	GND	97	I/O	CY10	133	I/O	VCRB4
26	I	CS	62	—	GND	98	I/O	CY9	134	I/O	VCRB5
27	I	IOEN	63	I	CF	99	I/O	CY8	135	I/O	VCRB6
28	I	SRST	64	I	VD	100	I/O	CY7	136	I/O	VCRB7
29	I	TEST	65	I	HD	101	I/O	CY6	137	I/O	VCRB8
30	—	GND	66	—	GND	102	—	GND	138	—	GND
31	I	BC1	67	I	$\overline{\text{TRST1}}$	103	I/O	CY5	139	I/O	VCRB9
32	I	TCK	68	I	$\overline{\text{TRST2}}$	104	I/O	CY4	140	O	VCR0
33	I	TDI	69	—	GND	105	I/O	CY3	141	O	VCR1
34	I	TENA1	70	I/O	CCB10	106	I/O	CY2	142	O	VCR2
35	O	TDO	71	I/O	CCB9	107	I/O	CY1	143	O	VCR3
36	I	VST	72	I/O	CCB8	108	I/O	CY0	144	O	VCR4

CXD606-101R (3/3)

INPUTS

CF	: COLOR FLAMING PULSE
CK1D	: CAMERA CLOCK
CK2D	: 27 MHz OR 28 MHz OR 36 MHz
CK3D	: VCR 27 MHz
CS	: CHIP SELECT
HD	: HD
IOEN	: IN/OUT ENABLE
PB	: $\overline{\text{REC}}$/PLAY BACK CONTROL
PS	: POWER SAVE ON/$\overline{\text{OFF}}$
SCK	: SERIAL CLOCK
VCRBCNT	: VCR B CONTROL/$\overline{\text{OUTPUT}}$
VD	: VD

OUTPUTS

CK2COMN	: CK2 PLL COMN
CK2COMP	: CK2 PLL COMP
DBLKG	: DIGITAL BLANKING
DCF	: DIGITAL COLOR FLAMING PULSE
DHD	: DIGITAL HD
DSYNC	: DIGITAL SYNC
DVD	: DIGITAL VD
VCK	: 27 MHz CLOCK
VCR0 - VCR9	: VCR R-Y

INPUTS/OUTPUTS

CCB0 - CCB10	: CAMERA B-Y 0 - 10
CCR0 - CCR10	: CAMERA R-Y 0 - 10
CY0 - CY10	: CAMERA Y 0 - 10
SDA0 - SDA3	: SERIAL DATA 0 - 3
VCRB0 - VCRB9	: VCR R-Y, B-Y 0 - 9
VYC0 - VYC9	: VCR Y 0 - 9

OTHERS

BC1	: CROSS CHECK
SRST	: LSI TEST
TCK	: CROSS CHECK PIN
TDI	: CROSS CHECK PIN
TDO	: CROSS CHECK
TENA1	: CROSS CHECK PIN
TEST	: LSI TEST
$\overline{\text{TRST1}}$, $\overline{\text{TRST2}}$	: LSI TEST
TSTDIN0 - TSTDIN11	: LSI TEST
TSTRST	: LSI TEST
TSTSEL	: LSI TEST
VST	: CROSS CHECK

CXD8281Q (SONY)

C-MOS DIGITAL AUDIO TIME BASE COMPRESSION FOR SIF TRANSMITER

—TOP VIEW—

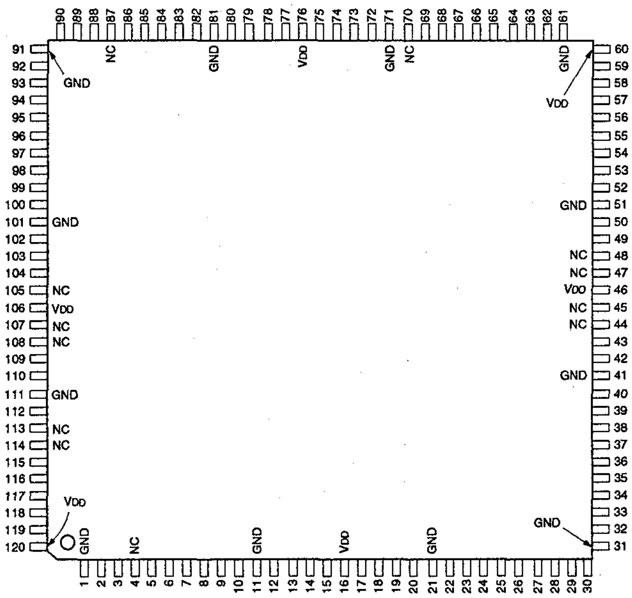

INPUT (WITH PULL-DOWN REGISTER)

128CK ; DIGITAL AUDIO 128 x Fs CLOCK
AD1/2 ; DIGITAL AUDIO CH-1/2 DATA
AD3/4 ; DIGITAL AUDIO CH-3/4 DATA
BCK ; DIGITAL AUDIO BIT CLOCK (=64 x Fs)
C1/2 ; DIGITAL AUDIO CH-1/2 CHANNEL STATUS BIT
C3/4 ; DIGITAL AUDIO CH-3/4 CHANNEL STATUS BIT
$\overline{OEAUX}$; OUTPUT ENABLE FOR AUX0–9 (L)
U1/2 ; DIGITAL AUDIO CH-1/2 USER DATA BIT
U3/4 ; DIGITAL AUDIO CH-3/4 USER DATA BIT
V1/2 ; DIGITAL AUDIO CH-1/2 VALIDITY FLAG
V3/4 ; DIGITAL AUDIO CH-3/4 VALIDITY FLAG
VCK ; VIDEO CLOCK (=4Fsc) INPUT
Z1/2 ; DIGITAL AUDIO CH-1/2 BLOCK SYNC (Z-FLAG)
Z3/4 ; DIGITAL AUDIO CH-3/4 BLOCK SYNC (Z-FLAG)

INPUT (WITH PULL-UP REGISTER)

20/16 ; DIGITAL AUDIO 20BIT/16BIT SELECT
AFS ; DIGITAL AUDIO FORMAT SELECT
CHEX0, 1 ; CHANNEL EXCHANGE 0, 1
$\overline{CHS1}$ - $\overline{CHS4}$; AUDIO CH1–CH4 OUTPUT SELECT (L)
$\overline{CLR}$; POWER ON CLEAR (L)
CWA0 - CWA3 ; *CHANNEL STATUS REGISTER WRITE ADDRESS 0 - 3*
CWCK ; CHANNEL STATUS REGISTER WRITE CLOCK
CWD0 - CWD7 ; CHANNEL STATUS REGISTER WRITE DATA 0 - 7
CWEN ; CHANNEL STATUS REGISTER WRITE ENABLE
D2/D1 ; VIDEO FORMAT D2/D1 SELECT
DID0, 1 ; DATA ID BIT0, 1
DIR ; DIGITAL AUDIO MSB FIRST/LSB FIRST SELECT
DLY0 - DLY4 ; DELAY CONTROL BIT0 - BIT3
$\overline{IT1}$ - $\overline{IT5}$; TEST (L)
LIM0, 1 ; LINE MODE 0, 1
LRCK ; DIGITAL AUDIO L/R CLOCK (=Fs)
LRS ; DIGITAL AUDIO LEFT/RIGHT BIT POSITION SELECT
SYNC ; VIDEO SYNC INPUT
ZCS ; DIGITAL AUDIO Z-FLAG C-BIT SELECT

OUTPUT

ADBT ; AUX. DATA BLOCK TIMING
ADFT ; AUX. DATA FLAG TIMING
AUXT ; AUX. DATA TIMING
OT1 = OT19 ; TEST
UDT ; USER DATA TIMING

OUTPUT (TRI-STATE)

AUX0 - AUX9 ; AUX. DATA 0 - 9

PIN NO.	I/O	SIGNAL	PIN NO.	I/O	SIGNAL	PIN NO.	I/O	SIGNAL	PIN NO.	I/O	SIGNAL
1	—	GND	31	—	GND	61	—	GND	91	—	GND
2	IU	$\overline{IT1}$	32	ID	C3/4	62	IU	CWA0 (LSB)	92	OT	AUX0 (LSB)
3	IU	$\overline{CLR}$	33	ID	C1/2	63	IU	CWA1	93	OT	AUX1
4	—	NC	34	ID	U3/4	64	IU	CWA2	94	OT	AUX2
5	O	OT1	35	ID	U1/2	65	IU	CWA3 (MSB)	95	OT	AUX3
6	O	OT2	36	ID	V3/4	66	IU	CWEN	96	OT	AUX4
7	O	OT3	37	ID	V1/2	67	IU	$\overline{IT3}$	97	OT	AUX5
8	O	OT4	38	ID	AD3/4	68	IU	$\overline{IT4}$	98	OT	AUX6
9	O	OT5	39	ID	AD1/2	69	IU	$\overline{IT5}$	99	OT	AUX7
10	O	OT6	40	ID	BCK	70	—	NC	100	OT	AUX8
11	—	GND	41	—	GND	71	—	GND	101	—	GND
12	O	OT7	42	ID	128CK	72	IU	DID0	102	OT	AUX9 (MSB)
13	O	OT8	43	IU	LRCK	73	IU	DID1	103	O	ADBT
14	O	OT9	44	—	NC	74	IU	LIM0	104	ID	$\overline{OEAUX}$
15	O	OT10	45	—	NC	75	IU	LIM1	105	—	NC
16	—	VDD	46	—	VDD	76	—	VDD	106	—	VDD
17	O	OT11	47	—	NC	77	IU	$\overline{CHS1}$	107	—	NC
18	O	OT12	48	—	NC	78	IU	$\overline{CHS2}$	108	—	NC
19	O	OT13	49	IU	$\overline{IT2}$	79	IU	$\overline{CHS3}$	109	IU	SYNC
20	O	OT14	50	IU	CWCK	80	IU	$\overline{CHS4}$	110	ID	VCK
21	—	GND	51	—	GND	81	—	GND	111	—	GND
22	IU	CHEX1	52	IU	CWD7 (MSB)	82	IU	DLY0 (LSB)	112	IU	D2/D1
23	IU	CHEX0	53	IU	CWD6	83	IU	DLY1	113	—	NC
24	IU	AFS	54	IU	CWD5	84	IU	DLY2	114	—	NC
25	IU	LRS	55	IU	CWD4	85	IU	DLY3	115	O	OT15
26	IU	DIR	56	IU	CWD3	86	IU	DLY4 (MSB)	116	O	OT16
27	IU	20/16	57	IU	CWD2	87	—	NC	117	O	OT17
28	IU	ZCS	58	IU	CWD1	88	O	AUXT	118	O	OT18
29	ID	Z3/4	59	IU	CWD0 (LSB)	89	O	UDT	119	O	OY19
30	ID	Z1/2	60	—	VDD	90	O	ADFT	120	—	VDD

U ; INPUT WITH *PULL-UP REGISTER*
D ; INPUT WITH PULL-DOWN REGISTER
OT ; TRI-STATE OUTPUT

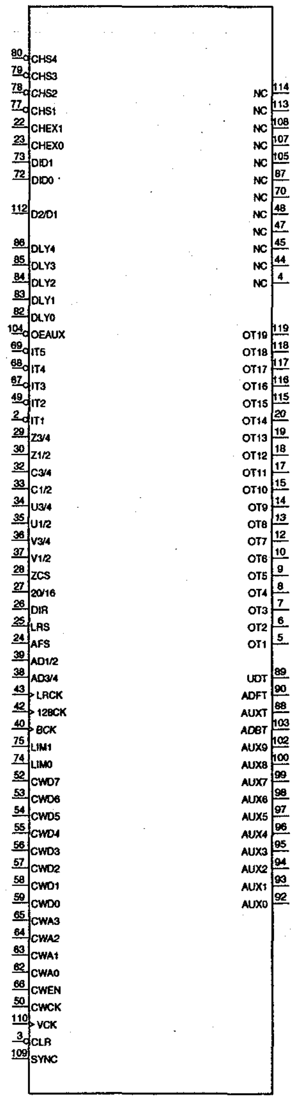

CXD8385Q (SONY)

C-MOS ENCODER

—TOP VIEW—

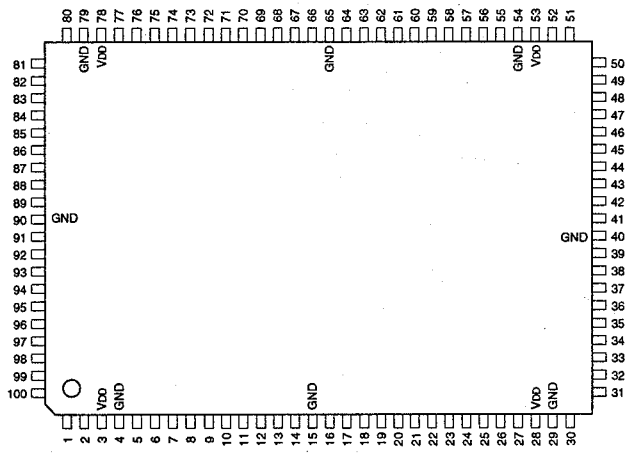

PIN No.	I/O	SIGNAL	PIN No.	I/O	SIGNAL	PIN No.	I/O	SIGNAL	PIN No.	I/O	SIGNAL
1	I	ANC9	26	I	VD1	51	O	MUD0	76	O	CM5
2	I	ANC8	27	I	VD0	52	O	MUD1	77	O	CM6
3	—	VDD	28	—	VDD	53	—	VDD	78	—	VDD
4	—	GND	29	—	GND	54	—	GND	79	—	GND
5	I	ANC7	30	I	PIN	55	O	MUD2	80	O	CM7
6	I	ANC6	31	I	PARAENC	56	O	MUD3	81	O	CM8
7	I	ANC5	32	I	HDELAY0	57	O	MUD4	82	O	CM9
8	I	ANC4	33	I	HDELAY1	58	I	VIEFENA	83	O	SYNC
9	I	ANC3	34	I	INX ON/OFF	59	O	CM0	84	O	PERROR1
10	I	ANC2	35	I	VC13	60	O	TFO	85	O	PERROR2
11	I	ANC1	36	I	VC12	61	O	TVO	86	I	MD0
12	I	ANC0	37	I	TRS MODE	62	O	MUD5	87	I	MD1
13	I	EXTH	38	I	CK27	63	O	MUD6	88	O	OC6
14	I	EXTF	39	I	INX B0/B2	64	O	MUD7	89	O	OC13
15	—	GND	40	—	GND	65	—	GND	90	—	GND
16	I	CF1	41	I	VC11	66	O	MUD8	91	O	OC27
17	I	CF2	42	I	VC10	67	O	MUD9	92	I	TX
18	I	VD9	43	I	XZLD	68	O	SYNC2	93	I	COMP
19	I	VD8	44	I	TCL	69	O	MFP	94	I	CFINFO
20	I	VD7	45	I	THCNT	70	O	CM1	95	I	SEL
21	I	VD6	46	I	TFCNT	71	O	CM2	96	I	RE
22	I	VD5	47	I	TFCK	72	O	CM3	97	I	INCH
23	I	VD4	48	I	TCNTO	73	O	ANEH	98	I	D1/J2
24	I	VD3	49	O	SAVPNT	74	O	ANEV	99	I	SLNP
25	I	VD2	50	O	POUT	75	O	CM4	100	I	ANIS

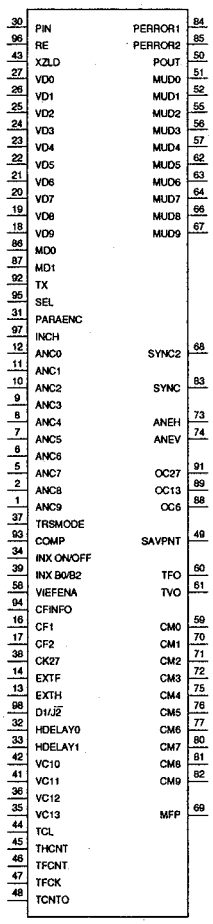

INPUT

ANC0 - ANC9	;	ANCILLARY DATA
ANIS	;	ANC GATE CONTROL
CF1/CF2	;	CF DATA
CFINFO	;	CFINFO CONTROL
CK27	;	27 MHz CLOCK
COMP	;	COMPOSIT/COMPONENT
D1/J2, SLNP	;	MODE CONTROL
EXTF	;	REF F
EXTH	;	REF H
HDELAY0, HDELAY1	;	JZ REF H TRS ADVANCE CONTROL
INCH, TCL, TCNTO, TFCK, TFCNT, THCNT, XZLD	;	TEST PIN
INX ON/OFF, INX B0/B2 VIEFENA	;	V. INX. CONTROL
PARAENC	;	SCRAMBLE NRZ CONVERT ON/OFF
PIN	;	PARITY
RE	;	ROUND CONTROL
TRSMODE	;	TRS 10-BIT/8-BIT SELECT
TX	;	TEST PIN
VC10 - VC13	;	525/60 V BLANK CONTROL
VD0 - VD9	;	VIDEO DATA

OUTPUT

ANEH, ANEV	;	PULSE
CM0 - CM9	;	H, F COUNTER
MFP	;	MULTIPLEX F COUNTER PULSE
MUD0 - MUD9	;	VIDEO DATA
OC13	;	13.5 MHz CLOCK
OC27	;	27 MHz CLOCK
OC6	;	6.75 MHz CLOCK
PERROR1, PERROR2	;	PARITY ERROR DETECT
POUT	;	PARITY
SAVPNT	;	SAV PULSE
SYNC, SYNC2	;	TIMING PULSE
TFO	;	F MONITOR
TVO	;	V MONITOR

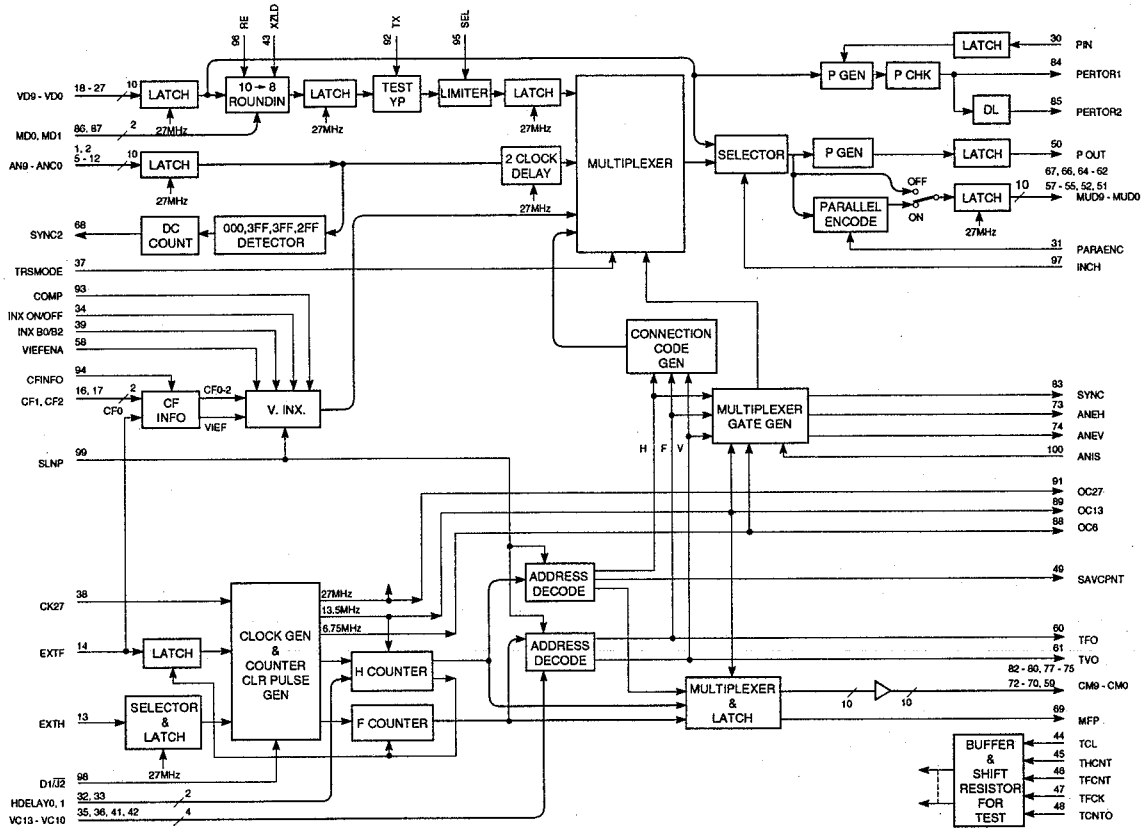

CXD2310AR-T4 (SONY)

C-MOS 10-BIT 20 MSPS VIDEO A/D CONVERTER

—TOP VIEW—

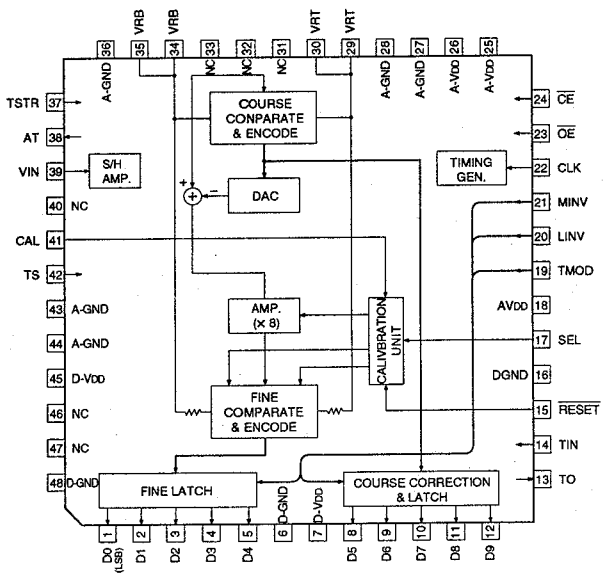

INPUT

CAL	:	CALIBRATION PULSE INPUT
CE	:	CHIP ENABLE
CLK	:	CLOCK
LINV	:	OUTPUT (D0 - D8) INVERSION
MINV	:	OUTPUT (D9) INVERSION
OE	:	DIGITAL DATA OUTPUT ENABLE
RESET	:	CALIBRATION CIRCUIT RESET
SEL	:	OUTPUT DATA (D5 - D9) SELECT FOR CALIBRATION (4-CLOCK) HIGH ; THROUGH OUTPUT, OW ; DATA FIXED AS WITH D0 - D4
TIN	:	TEST SIGNAL INPUT
TMOD	:	TEST MODE
TS	:	TEST SIGNAL INPUT
TSTR	:	TEST SIGNAL INPUT
VRB	:	REFERENCE BOTTOM VOLTAGE
VRT	:	REFERENCE TOP VOLTAGE

OUTPUT

AT	:	TEST SIGNAL OUTPUT
D0 - D9	:	DIGIRAL DATA OUTPUT
TO	:	TEST PIN

HD6413308RF10 (HITACHI)

C-MOS 8-BIT SINGLE CHIP MICROCOMPUTER
—TOP VIEW—

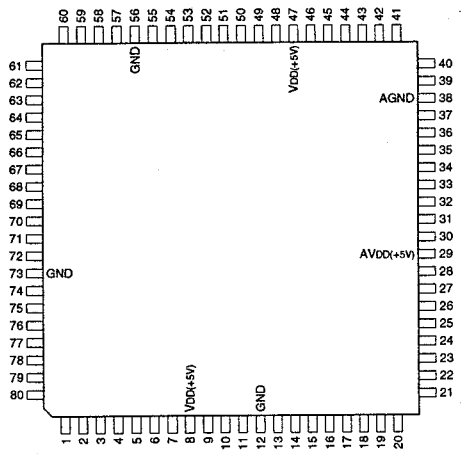

PIN NO.	I/O	SIGNAL	PIN NO.	I/O	SIGNAL	PIN NO.	I/O	SIGNAL	PIN NO.	I/O	SIGNAL
1	I	$\overline{RES}$	21	I/O	P60/FTCI	41	I/O	P42/TMRI0	61	I/O	P13/A3
2	I	XTAL	22	I/O	P61/FTOA	42	I/O	P43/TMCI1	62	I/O	P12/A2
3	I	EXTAL	23	I/O	P62/FTIA	43	I/O	P44/TMO1	63	I/O	P11/A1
4	I	MD1	24	I/O	P63/FTIB	44	I/O	P45/TMRI1	64	I/O	P10/A0
5	I	MD0	25	I/O	P64/FTIC	45	I/O	P46/PW0	65	I/O	P30/DDB0/D0
6	I	$\overline{NMI}$	26	I/O	P65/FTID	46	I/O	P47/PW1	66	I/O	P31/DDB1/D1
7	I	$\overline{STBY}$	27	I/O	P66/FTOB/$\overline{IRQ6}$	47	—	VDD	67	I/O	P32/DDB2/D2
8	—	VDD	28	I/O	P67/$\overline{IRQ7}$	48	I/O	P27/A15	68	I/O	P33/DDB3/D3
9	I/O	P52/ASCK	29	—	AVDD	49	I/O	P26/A14	69	I/O	P34/DDB4/D4
10	I/O	P51/ARXD	30	I	P70/AN0	50	I/O	P25/A13	70	I/O	P35/DDB5/D5
11	I/O	P50/ATXD	31	I	P71/AN1	51	I/O	P24/A12	71	I/O	P36/DDB6/D6
12	—	GND	32	I	P72/AN2	52	I/O	P23/A11	72	I/O	P37/DDB7/D7
13	I/O	P97/$\overline{WE}$/$\overline{WAIT}$	33	I	P73/AN3	53	I/O	P22/A10	73	—	GND
14	I/O	P96/Ø	34	I	P74/AN4	54	I/O	P21/A9	74	I/O	P80/RS0/E
15	I/O	P95/$\overline{RDY}$/$\overline{AS}$	35	I	P75/AN5	55	I/O	P20/A8	75	I/O	P81/RS1/$\overline{IOS}$
16	I/O	P94/$\overline{OE}$/$\overline{WR}$	36	I	P76/AN6	56	—	GND	76	I/O	P82/RS2
17	I/O	P93/$\overline{CS}$/$\overline{RD}$	37	I	P77/AN7	57	I/O	P17/A7	77	I/O	P83/RS3
18	I/O	P92/$\overline{IRQ0}$	38	—	AGND	58	I/O	P16/A6	78	I/O	P84/CTXD/$\overline{IRQ3}$
19	I/O	P91/$\overline{IRQ1}$	39	I/O	P40/TMCI0	59	I/O	P15/A5	79	I/O	P85/CRXD/$\overline{IRQ4}$
20	I/O	P90/$\overline{ADTRG}$/$\overline{IRQ2}$	40	I/O	P41/TMO0	60	I/O	P14/A4	80	I/O	P86/CSCK/$\overline{IRQ5}$

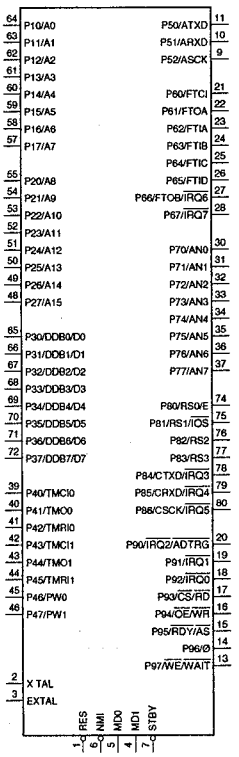

INPUT

A15 - A0	; ADDRESS BUS
ADTRG	; A/D CONVERSION EXIT TRIGGER
AN7 - AN0	; ANALOG
ARXD, CRXD	; RECEIVE DATA
CS	; CHIP SELECT
FTCI	; FREE RUNNING TIMER CLOCK
IRQ0 - IRQ7	; INTERRUPT REQUEST
MD0, MD1	; MODE
NMI	; INTERRUPT FOR NO MASKING
OE	; OUTPUT ENABLE
P77 - P70	; PORT 7
RES	; RESET
RS3 - RS0	; REGISTER SELECT
STBY	; STANDBY
TMCI0, TMCI1	; 8-BIT TIMER CLOCK
TMRI0, TMRI1	; 8-BIT TIMER COUNTER RESET
XTAL, EXTAL	; CRYSTAL
WAIT	; WAIT
WE	; WRITE ENABLE

OUTPUT

ATXD, CTXD	; TRANSMIT DATA
AS	; ADDRESS STROBE
E	; ENABLE CLOCK
FTOA, FTOB	; FREE RUNNING TIMER COMPARE
IOS	; I/O SELECT
PW0, PW1	; PWM TIMER
RD	; READ
RDY	; READY
TMO0, TMO1	; 8-BIT TIMER
WR	; WRITE
Ø	; SYSTEM CLOCK

INPUT/OUTPUT

ASCK, CSCK	; SERIAL CLOCK
D7 - D0	; DATA BUS
DDB7 - DDB0	; DPRAM DATA BUS
P17 - P10	; PORT 1
P27 - P20	; PORT 2
P37 - P30	; PORT 3
P47 - P40	; PORT 4
P52 - P50	; PORT 5
P67 - P60	; PORT 6
P86 - P80	; PORT 8
P97 - P90	; PORT 9

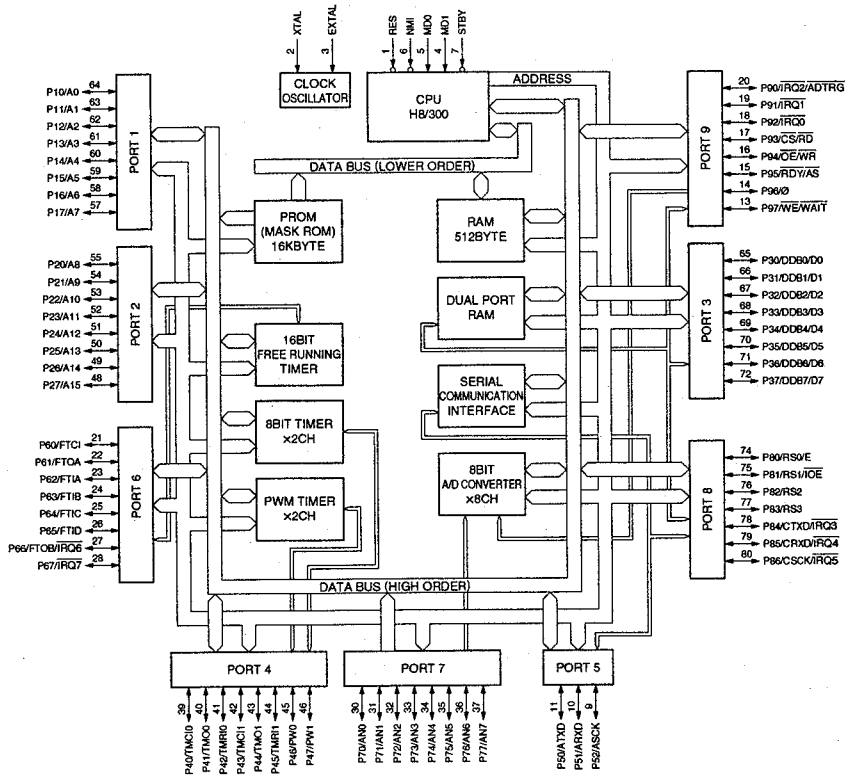

HD151015T (HITACHI)
HD151015TEL

C-MOS 9-BIT LEVEL SHIFTER/TRANSCEIVER WITH 3-STATE OUTPUTS
—TOP VIEW—

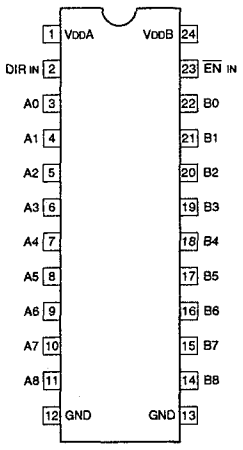

EN	DIR	OPERATION
0	0	B to A
0	1	A to B
1	×	HI-Z

0 : LOW LEVEL
1 : HIGH LEVEL
× : DON'T CARE
HI-Z : HIGH IMPEDANCE

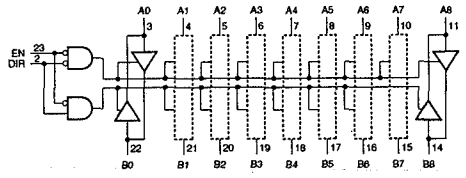

MB88346BPFV (FUJITSU)
MB88346BPFV-EF

C-MOS 8-BIT D/A CONVERTER
—TOP VIEW—

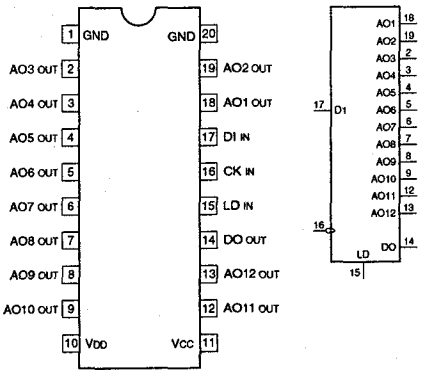

AO1 - AO12 : 8-BIT D/A OUTPUTS
CK : CLOCK INPUT
DI : SERIAL DATA INPUT
DO : DATA OUTPUT
LD : DATA LOAD CONTROL INPUT (H : LOAD)

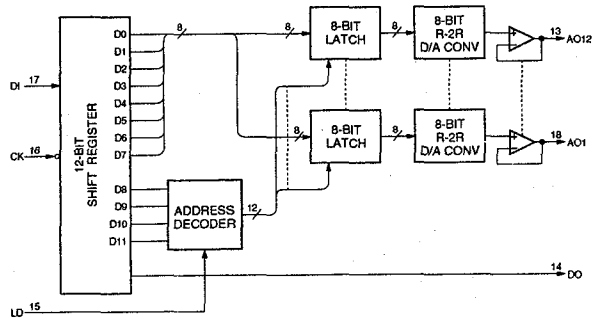

QL12X16B-XPF100C

C-MOS FIELD PROGRAMMABLE GATE ARRAY
—TOP VIEW—

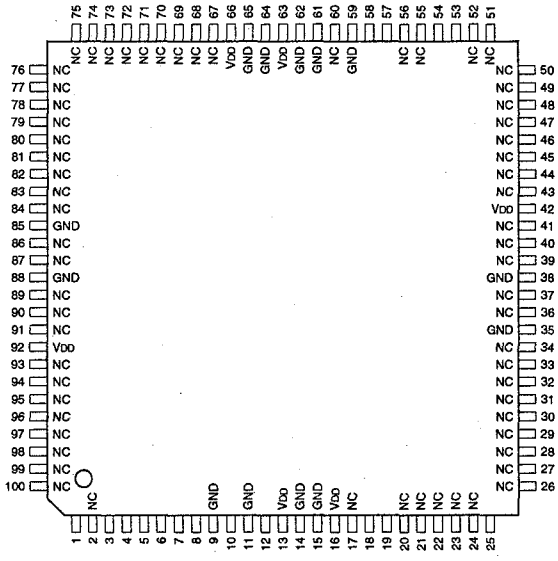

PIN NO.	I/O	SIGNAL	PIN NO.	I/O	SIGNAL	PIN NO.	I/O	SIGNAL	PIN NO.	I/O	SIGNAL
1	I/O	CLR	26	—	NC	51	—	NC	76	—	NC
2	—	NC	27	—	NC	52	—	NC	77	—	NC
3	I/O	PAL NTSC	28	—	NC	53	I/O	BLKG	78	—	NC
4	I/O	FULL NORMAL	29	—	NC	54	I/O	XBLKG	79	—	NC
5	I/O	CLKSEL	30	—	NC	55	—	NC	80	—	NC
6	I/O	CLK2IN	31	—	NC	56	—	NC	81	—	NC
7	I/O	CLK2OUT	32	—	NC	57	I/O	WIDE ID	82	—	NC
8	I/O	CLK1IN	33	—	NC	58	I/O	XWIDE ID	83	—	NC
9	—	GND	34	—	NC	59	—	GND	84	—	NC
10	I/O	CLK1 2OUT	35	—	GND	60	—	NC	85	—	GND
11	—	GND	36	—	NC	61	—	GND	86	—	NC
12	I	CLK	37	—	NC	62	—	GND	87	—	NC
13	—	VDD	38	—	GND	63	—	VDD	88	—	GND
14	—	GND	39	—	NC	64	—	GND	89	—	NC
15	—	GND	40	—	NC	65	—	GND	90	—	NC
16	—	VDD	41	—	NC	66	—	VDD	91	—	NC
17	—	NC	42	—	VDD	67	—	NC	92	—	VDD
18	I/O	HDIN	43	—	NC	68	—	NC	93	—	NC
19	I/O	VDIN	44	—	NC	69	—	NC	94	—	NC
20	—	NC	45	—	NC	70	—	NC	95	—	NC
21	—	NC	46	—	NC	71	—	NC	96	—	NC
22	—	NC	47	—	NC	72	—	NC	97	—	NC
23	—	NC	48	—	NC	73	—	NC	98	—	NC
24	—	NC	49	—	NC	74	—	NC	99	—	NC
25	I/O	MODE FULL	50	—	NC	75	—	NC	100	—	NC

SC7S02F (MOTOROLA)
TC7S02F(TE85R)

C-MOS 2-INPUT NOR GATE
—TOP VIEW—

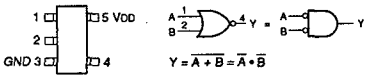

A	B	Y
0	0	1
0	1	0
1	0	0
1	1	0

0 : LOW LEVEL
1 : HIGH LEVEL

SN74HC32APW-E05 (TI)
TC74VHC32FT(EL) (TOSHIBA)

C-MOS QUAD 2-INPUT OR GATES
—TOP VIEW—

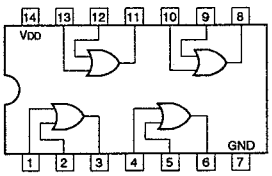

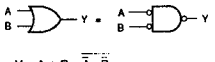

$Y = A + B = \overline{\overline{A} \cdot \overline{B}}$

A	B	Y
0	0	0
0	1	1
1	0	1
1	1	1

0 : LOW LEVEL
1 : HIGH LEVEL

TC74VHC123AFT(EL) (TOSHIBA)

C-MOS DUAL RETRIGGERABLE MONOSTABLE MULTIVIBRATORS
—TOP VIEW—

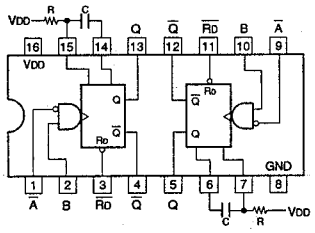

INPUTS			OUTPUTS	
RD	A	B	Q	Q̄
0	×	×	0	1
1	1	×	0	1
1	×	0	0	1
1	0	↑	⊓	⊔
1	↓	1	⊓	⊔
↓	0	1	⊓	⊔

0 : LOW LEVEL
1 : HIGH LEVEL
× : DON'T CARE

OUTPUT PULSE WIDTH = 0.46 CR

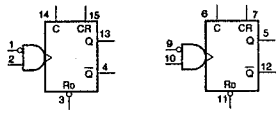

TC74VHC163FT(EL) (TOSHIBA)

C-MOS PRESETTABLE SYNCHRONOUS 4-BIT BINARY COUNTER
—TOP VIEW—

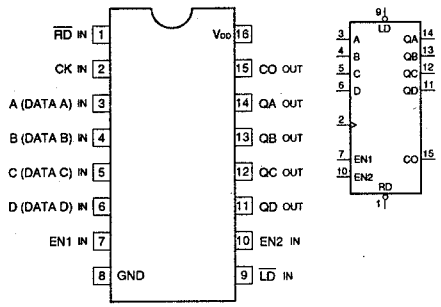

MODE SELECTION

CONTROL INPUTS				MODE
RD	LD	EN1	EN2	
0	×	×	×	RESET (SYNCHRONOUS)
1	0	×	×	PRESET (SYNCHRONOUS)
1	1	0	×	NO COUNT
1	1	×	0	NO COUNT
1	1	1	1	COUNT

CARRY OUTPUT "CO"

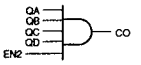

CO IS HIGH WHEN EN2 INPUT IS HIGH AND COUNT IS "15".

COUNT SEQUENCE

COUNT	OUTPUTS			
	QD	QC	QB	QA
0	0	0	0	0
1	0	0	0	1
2	0	0	1	0
3	0	0	1	1
4	0	1	0	0
5	0	1	0	1
6	0	1	1	0
7	0	1	1	1
8	1	0	0	0
9	1	0	0	1
10	1	0	1	0
11	1	0	1	1
12	1	1	0	0
13	1	1	0	1
14	1	1	1	0
15	1	1	1	1

TC74VHC164FT(EL) (TOSHIBA)

C-MOS 8-BIT SERIAL-IN/PARALLEL-OUT SHIFT REGISTER
—TOP VIEW—

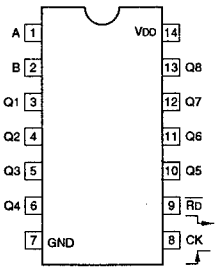

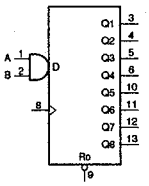

INPUTS				OUTPUTS			
RD	CK	A	B	Q1	Q2	---	Q8
0	×	×	×	0	0	0	0
1	0	×	×	Q1o	Q2o	---	Q8o
1	↑	1	1	1	Q1n	---	Q7n
1	↑	0	×	0	Q1n	---	Q7n
1	↑	×	0	0	Q1n	---	Q7n

0 : LOW LEVEL
1 : HIGH LEVEL
× : DON'T CARE

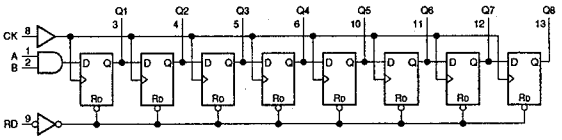

TC74VHC574FT(EL) (TOSHIBA)

C-MOS 3-STATE D-TYPE EDGE-TRIGGERED FLIP-FLOP
—TOP VIEW—

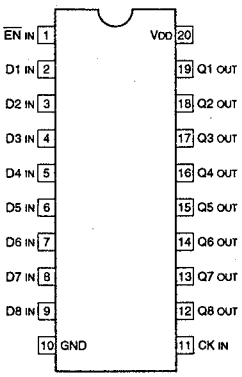

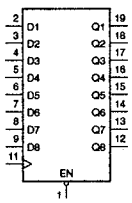

EACH FLIP-FLOP

INPUTS				OUT
EN	CK	D	Q	
0	↑	1	1	
0	↑	0	0	
0	↓	×	Q0	
1	×	×	HI-Z	

0 : LOW LEVEL
1 : HIGH LEVEL
× : DON'T CARE
HI-Z : HIGH IMPEDANCE
Q0 : NONSTABLE

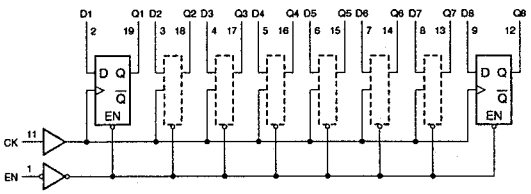

TC74VHC86FT(EL) (TOSHIBA)

C-MOS QUAD EXCLUSIVE OR GATES
—TOP VIEW—

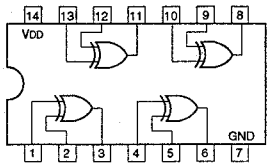

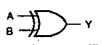

$Y = \overline{A} \cdot B + A \cdot \overline{B}$

A	B	Y
0	0	0
0	1	1
1	0	1
1	1	0

0 : LOW LEVEL
1 : HIGH LEVEL

TC7S32FU(TE85R) (TOSHIBA)

C-MOS 2-INPUT OR GATE
—TOP VIEW—

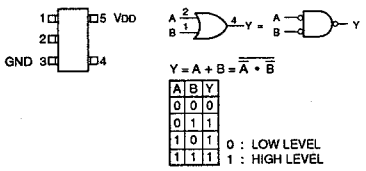

$Y = A + B = \overline{\overline{A} \cdot \overline{B}}$

A	B	Y
0	0	0
0	1	1
1	0	1
1	1	1

0 : LOW LEVEL
1 : HIGH LEVEL

TC7S86F(TE85R)
TC7S86F-TE85L (TOSHIBA)

C-MOS 2-INPUT EXCLUSIVE OR GATE
—TOP VIEW—

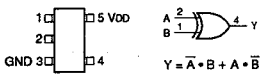

$Y = \overline{A} \cdot B + A \cdot \overline{B}$

A	B	Y
0	0	0
0	1	1
1	0	1
1	1	0

0 : LOW LEVEL
1 : HIGH LEVEL

TC7SH08FU-TE85R (TOSHIBA)

C-MOS 2-INPUT AND GATE
—TOP VIEW—

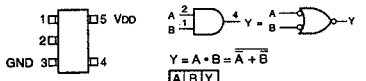

$Y = A \cdot B = \overline{\overline{A} + \overline{B}}$

A	B	Y
0	0	0
0	1	0
1	0	0
1	1	1

0 : LOW LEVEL
1 : HIGH LEVEL

TC7W04FU (TOSHIBA)
TC7W04FU(TE12R) (TOSHIBA)
TC7WU04FU(TE12R) (TOSHIBA)

C-MOS HEX INVERTERS
—TOP VIEW—

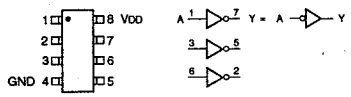

$Y = \overline{A}$

A	Y
0	1
1	0

0 : LOW LEVEL
1 : HIGH LEVEL

TL1451ACPW-E05 (TI)

DUAL PWM POWER CONTROLLER
—TOP VIEW—

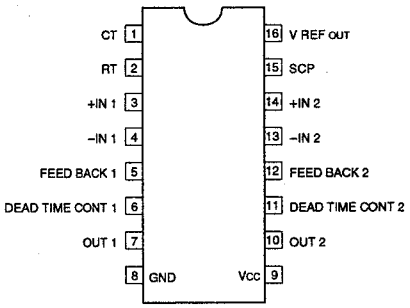

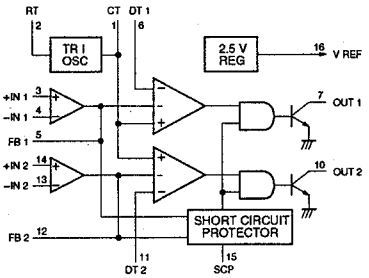

TL7705CPS-B (TI)
TL7705CPS-B-E05

POWER VOLTAGE SUPERVISOR
—TOP VIEW—

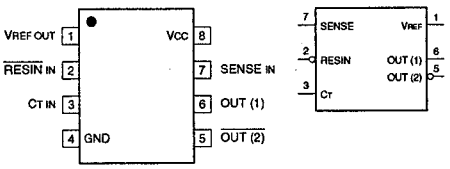

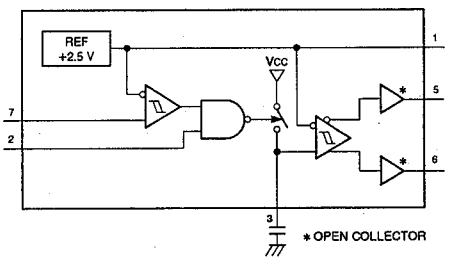

TLC2932IPW-E20 (TI)

C-MOS VCO AND PHASE FREQUENCY DETECTOR

—TOP VIEW—

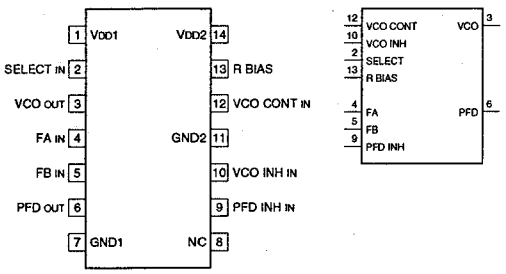

INPUT

FA	: REFERENCE FREQUENCY
FB	: INPUT FREQUENCY FROM OUTSIDE COUNTER
PFD INH	: PFD INHIBIT
SELECT	: VCO OUTPUT FREQUENCY SELECT
VCO CONT	: VCO CONTROL VOLTAGE
VCO INH	: VCO INHIBIT

OUTPUT

PFD	: PHASE FREQUENCY DETECTOR
VCO	: VOLTAGE CONTROLLED OSCILLATOR

OTHER

R BIAS	: BIAS RESISTOR FOR VCO OSCILLATION FREQUENCY SETTING

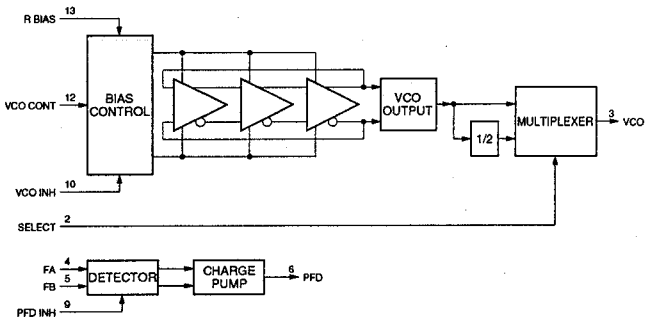

X24164SIT1 (XICOR)(16 K-BIT)

C-MOS SERIAL EEPROM

—TOP VIEW—

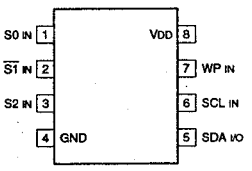

INPUT

S0, S1, S2	: DEVICE SELECT
SCL	: SERIAL CLOCK
WP	: WRITE PROTECT

INPUT/OUTPUT

SDA	: SERIAL DATA

CXD8924Q (SONY)

COLOR BARS GENERATOR

—TOP VIEW—

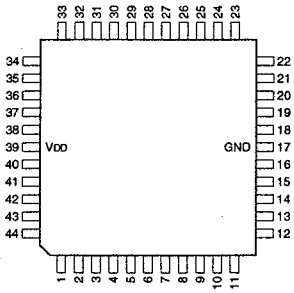

PIN NO.	I/O	SIGNAL	PIN NO.	I/O	SIGNAL	PIN NO.	I/O	SIGNAL	PIN NO.	I/O	SIGNAL
1	I	SAF	12	I	$\overline{CD2}$	23	I	VBL19	34	O	R
2	I	9080	13	I	$\overline{CD1}$	24	I	VBL20	35	O	G
3	I	CENT	14	I	$\overline{CD0}$	25	O	BLKG	36	O	B
4	O	MARK	15	O	BFO	26	I	$\overline{HB3}$	37	I	SNGE
5	I	TEST	16	O	SYNCO	27	I	$\overline{HB2}$	38	O	CLP
6	O	ZBR	17	—	GND	28	I	$\overline{HB1}$	39	—	VDD
7	I	ZBRE	18	I	CLK	29	I	$\overline{HB0}$	40	O	NSU
8	O	PBLK	19	O	CLKO	30	O	I	41	O	PSU
9	O	VSAMP	20	I	NP	31	O	Q	42	I	BARE
10	I	BF	21	I	HD	32	O	Y1	43	I	TSAWE
11	I	SYNC	22	I	VD	33	O	Y2	44	O	TSAW

INPUTS

9080	: 90%/80% SAFETY MARKER CONTROL
BARE	: BARS OUTPUT ENABLE
BF	: BURST FLAG PULSE
CENT	: CENTER MARKER CONTROL
CLK	: CLOCK
HD	: HORIZONTAL DRIVE PULSE
NP	: NTSC/PAL SELECT
SAF	: SAFETY MARKER CONTROL
SNGE	: SNG BARS OUTPUT ENABLE
SYNC	: COMPOSITE SYNC PULSE
TEST	: TEST SIGNAL
TSAWE	: TEST SAW OUTPUT ENABLE
VBL19, VBL20	: V-BLANKING CONTROL
$\overline{VD}$	: VERTICAL DRIVE PULSE
$\overline{CD0}$ - $\overline{CD2}$	: SYNC/BF DELAY CONTROL
$\overline{HB0}$ - $\overline{HB3}$	: H-BLANKING WIDTH CONTROL
ZBRE	: ZEBRA PULSE OUTPUT ENABLE

OUTPUTS

B	: B CH PULSE
BFO	: BURST FLAG PULSE
BLKG	: COMPOSITE BLANKING PULSE
CLKO	: CLOCK
CLP	: CLAMP PULSE
G	: G CH PULSE
I	: I PULSE
MARK	: MARKER PULSE
NSU	: BARS –4 BLACK PULSE
PBLK	: PRE-BLANKING PULSE
PSU	: BARS +4 BLACK PULSE
Q	: Q PULSE
R	: R CH PULSE
SYNCO	: COMPOSITE SYNC PULSE
TSAW	: TEST SAW PULSE
VSAMP	: V-SAMPLING PULSE
Y1, Y2	: BARS 100% WHITE PULSE
ZBR	: ZEBRA

CXD8826Q (SONY)

MONITOR OUTPUT SELECTOR
—TOP VIEW—

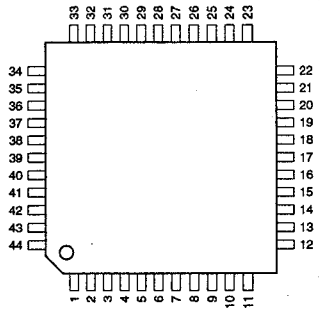

PIN NO.	I/O	SIGNAL	PIN NO.	I/O	SIGNAL	PIN NO.	I/O	SIGNAL	PIN NO.	I/O	SIGNAL
1	I	SECT	12	I	CNT1	23	O	OX1	34	O	OS2
2	I	WP1	13	I	CNT2	24	O	OS1	35	O	O2Q1
3	I	AB1	14	I	SPCT	25	O	O1Q1	36	O	O2Q0
4	I	WP2	15	I	RST1	26	O	O1Q0	37	I	CLK1
5	I	AB2	16	I	RST2	27	O	OR2	38	I	CLK2
6	—	GND	17	—	GND	28	—	Vcc	39	—	Vcc
7	I	SEL1	18	O	OR1	29	O	OG2	40	O	CLKO
8	I	SEL2	19	O	OG1	30	O	OB2	41	I	CLKI
9	I	RIN	20	O	OB1	31	O	OY2	42	—	NC
10	I	GIN	21	O	OY1	32	O	OE2	43	—	NC
11	I	BIN	22	O	OE1	33	O	OX2	44	I	EN

INPUTS

AB1, AB2 : CH1, 2 SYSTEM A/B SELECT
(H: A, L: B)
BIN : B SIGNAL ON/OFF CONTROL
(H: ON, L: OFF)
CLK1, CLK2 : LOAD CLOCK FOR INTPUT DATA
CLKI : 1/64 COUNTER
CNT1, CNT2 : INPUT FUNCTION SELECT 1, 2

CNT1	CNT2	INPUT
L	L	OFF
L	H	–G
H	L	ENC
H	H	SEQ

EN : ENABLE
GIN : G SIGNAL ON/OFF CONTROL
(H: ON, L: OFF)
RIN : R SIGNAL ON/OFF CONTROL
(H: ON, L: OFF)
RST1, RST2 : CH1, 2 RESET
SECT : SEQUENTIAL CONTROL
(H: SEQ2 (4-WAVE), L: SEQ1 (3-WAVE))
SEL1, SEL2 : INPUT DATA SELECT 1, 2

SEL1	SEL2	INPUT
L	L	WF A
L	H	WF B
H	L	PIX A
H	H	PIX B

SPCT : SERIAL/PARALLEL CONTROL
WP1, WP2 : CH1, 2 WF/PIX SELECT
(H: PIX, L: WF)

OUTPUTS

CLKO : 1/64 COUNTER
O1Q0, O2Q0 : CH1, 2 COUNTER LOWER BIT
O1Q1, O2Q1 : CH1, 2 COUNTER UPPER BIT
OB1, OB2 : CH1, 2 B ON/OFF CONTROL
OE1, OE2 : CH1, 2 ENC ON/OFF CONTROL
OG1, OG2 : CH1, 2 G ON/OFF CONTROL
OR1, OR2 : CH1, 2 R ON/OFF CONTROL
OS1, OS2 : CH1, 2 SEQUENTIAL ON/OFF CONTROL
OX1, OX2 : CH1, 2 –G ON/OFF CONTROL
OY1, OY2 : CH1, 2 Y ON/OFF CONTROL

OTHER

NC : NO CONNECTION

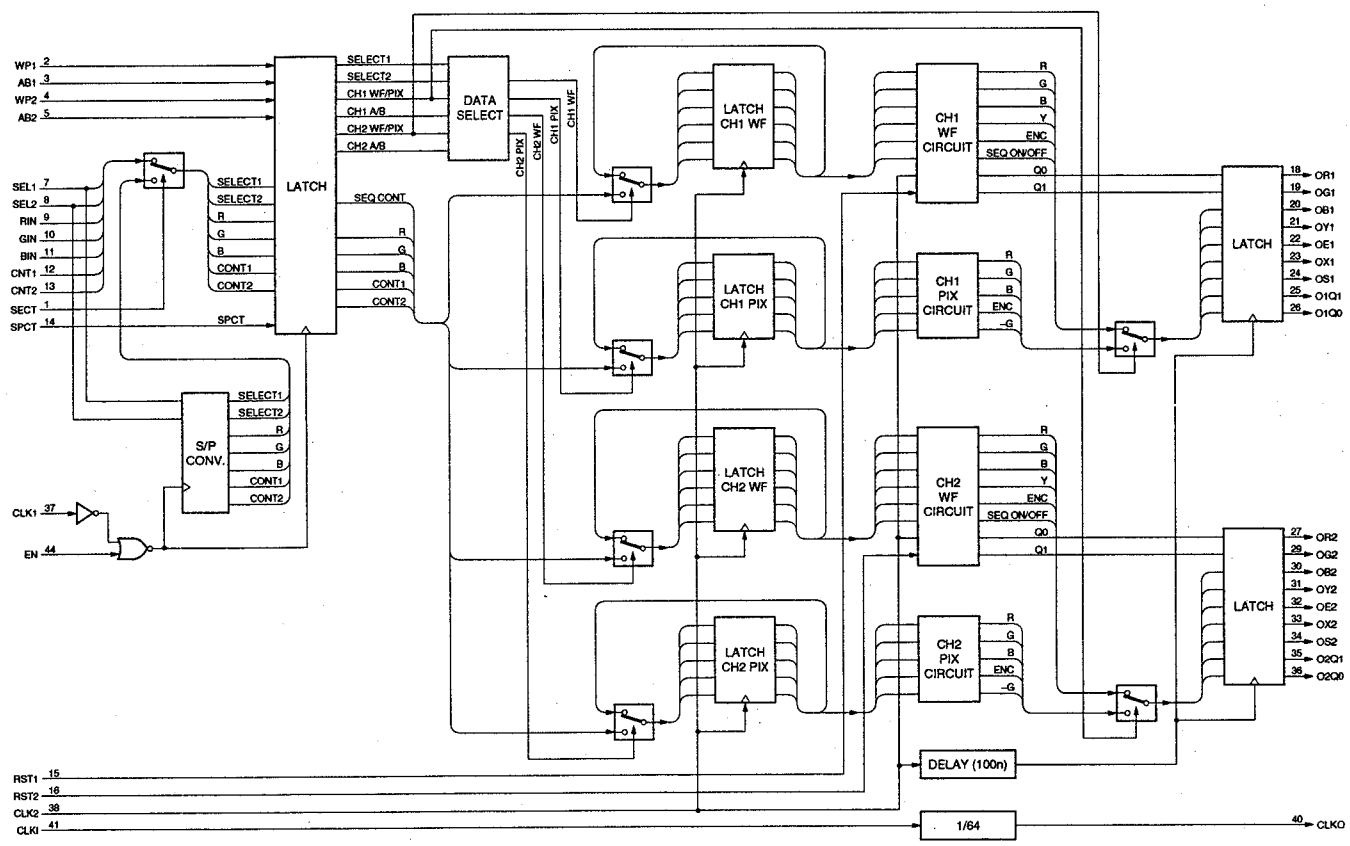

SECTION 6
SPARE PARTS

6-1. NOTES ON REPAIR PARTS

(1) Safety Related Components Warning
Components marked ⚠ are critical to safe operation. Therefore, specified parts should be used in the case of replacement.

(2) Standardization of Parts
Repair parts supplied from Sony Parts Center may not be always identical with the parts which actually in use due to "accommodating the improved parts and/or engineering changes" or "standardization of genuine parts".
This manual's exploded views and electrical spare parts list are indicating the part numbers of "the standardized genuine parts at present" .

(3) Stock of Parts
Parts marked with "o" SP (Supply Code) column of the spare parts list are not normally required for routine service work. Orders for parts marked with "o" will be processed, but allow for additional delivery time.

(4) Units for Capacitors, Inductors and Resistors
The following units are assumed in schematic diagrams, electrical parts list and exploded views unless otherwise specified.

Capacitors	:	μF
Inductors	:	μH
Resistors	:	Ω

6-1. 補修部品注意事項

(1) 安全重要部品
⚠警告
⚠印のついた部品は安全性を維持するために重要な部品です。したがって，交換する時は必ず指定の部品を使ってください。

(2) 部品の共通化
ソニーから供給される部品は，セットに実装されているものと異なることがあります。これは部品の共通化，改良等によるものです。
分解図や電気部品表には現時点での共通化された部品が記載されています。

(3) 部品の在庫
部品表のSP (Supply code) 欄に "o" で示される部品は交換頻度が低い部品ですので在庫していないことがあり，納期が長くなることがあります。

(4) コンデンサ，インダクタ，抵抗の単位
回路図，分解図，電気部品表中，特に明記したものを除き，下記の単位は省略されています。

コンデンサ	:	μF
インダクタ	:	μH
抵抗	:	Ω

6-2. EXPLODED VIEW

FRONT PANEL

No.	Part No.	SP	Description
1	A-8315-038-C	o	MOUNTED CIRCUIT BOARD, AU-234
2	X-2355-502-1	s	KNOB ASSY, CONTROL
3	1-563-159-11	s	CONNECTOR, XLR 5P FEMALE "INCOM"
4	2-126-669-11	o	HINGE (LARGE)
5	2-249-303-00	o	WINDOW (2), REMOTE CONTROL
6	2-249-304-02	o	FRAME(2), WINDOW, REMOTE CONTROL
7	2-249-353-00	s	COVER, LAMP
8	2-295-991-00	o	GUARD, SWITCH
9	3-608-368-02	s	SCREW
10	3-608-370-01	o	PANEL SIDE, FRONT
11	3-608-373-01	o	PANEL, FRONT
12	3-608-402-21	o	SPACER
13	3-613-164-00	o	SHAFT, STEP

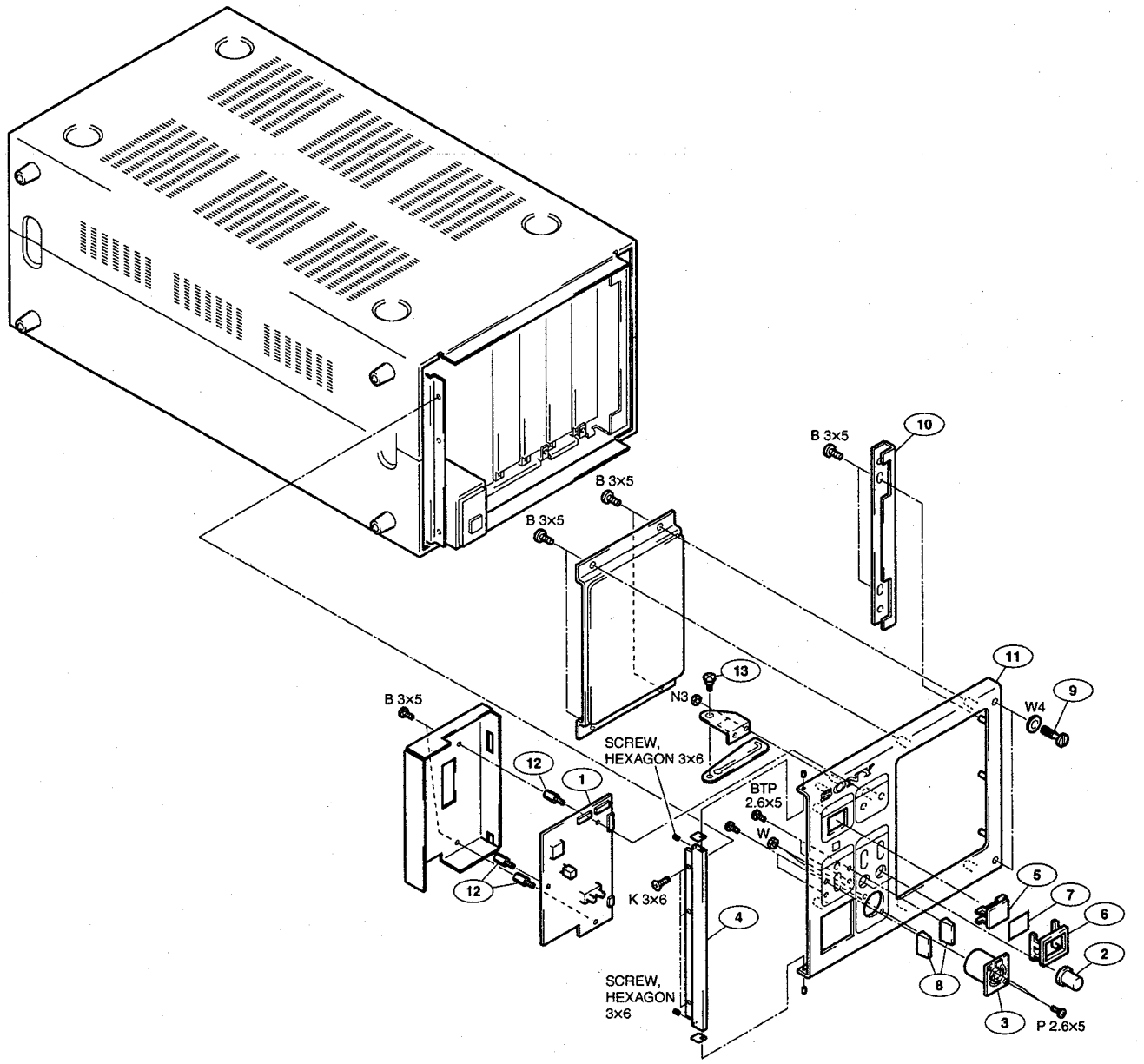

BOARDS

No.	Part No.	SP	Description
101	A-8315-033-A	o	MOUNTED CIRCUIT BOARD, CT-181
102	A-8315-034-B	o	MOUNTED CIRCUIT BOARD, AA-90
103	A-8315-035-A	o	MOUNTED CIRCUIT BOARD, YD-26
104	A-8315-041-C	o	MOUNTED CIRCUIT BOARD, ES-20 [For UC]
	A-8315-061-C	o	MOUNTED CIRCUIT BOARD, ES-20 [For J]
	A-8315-066-C	o	MOUNTED CIRCUIT BOARD, ES-20 [For CE]
105	2-251-622-01	o	LEVER, PC BOARD
106	A-8319-157-A	o	MOUNTED CIRCUIT BOARD, DU-33 S/N 10601 and Higher (for UC) S/N 30061 and Higher (for J) S/N 40251 and Higher (for CE)

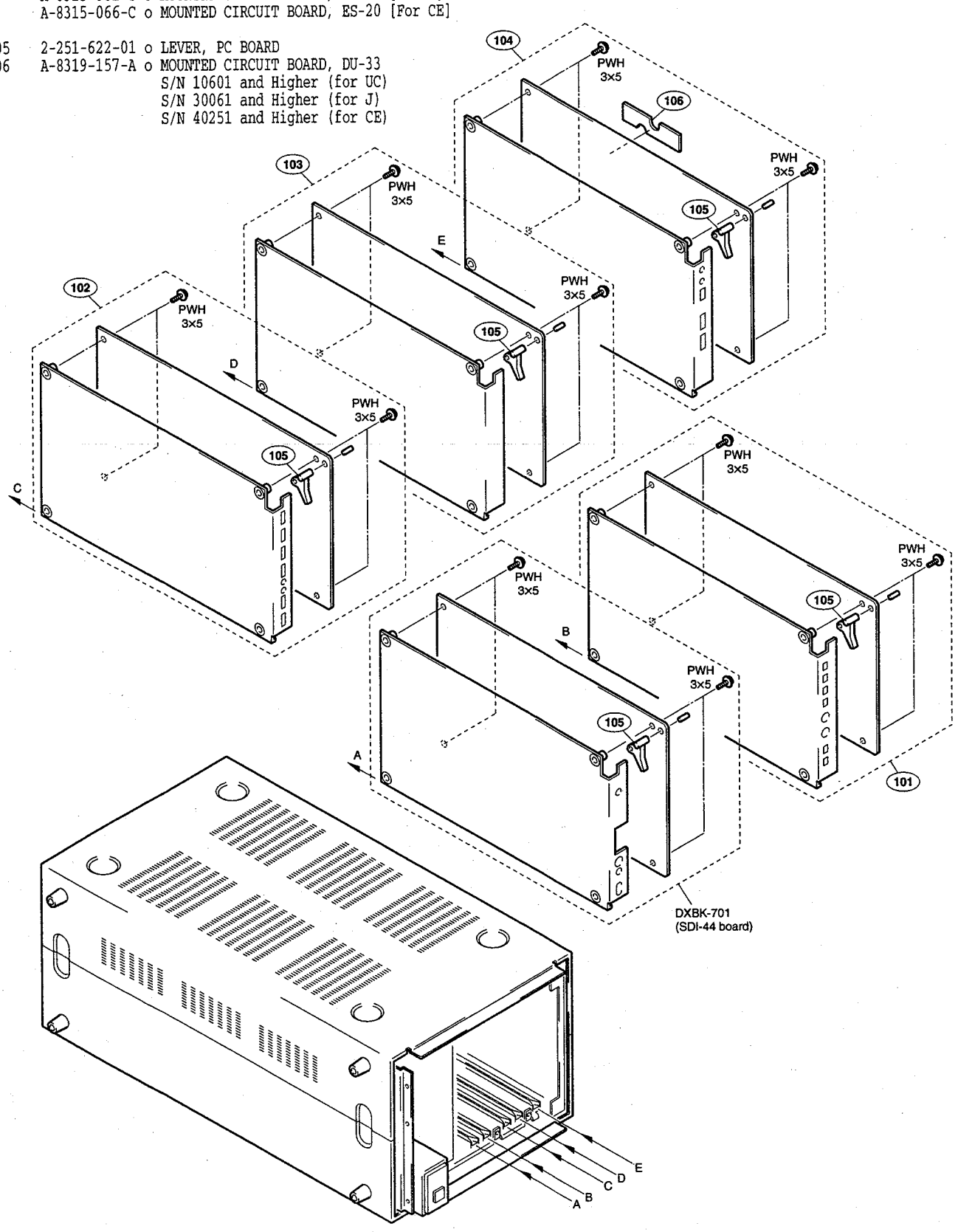

CHASSIS

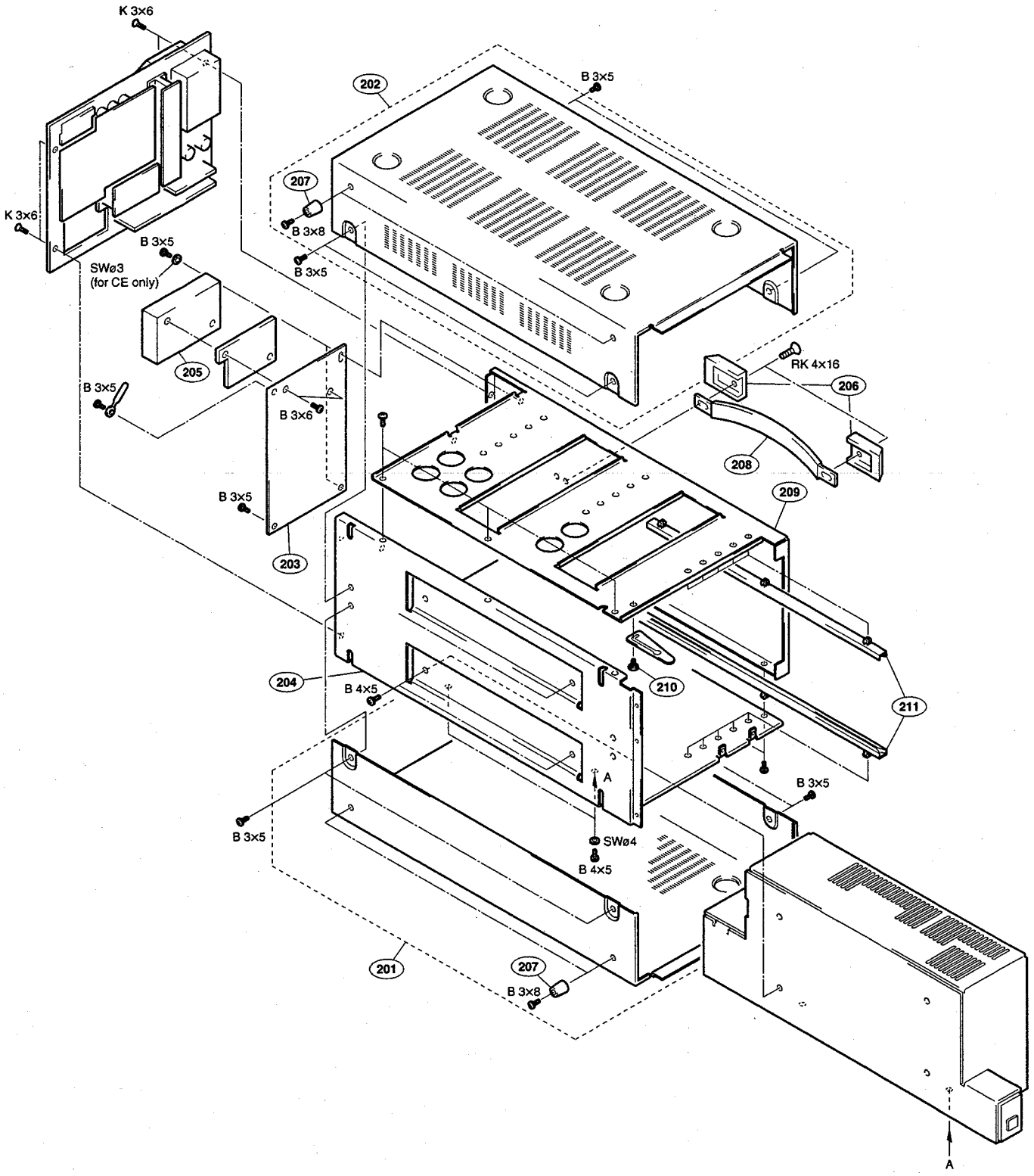
K 3x6
202
B 3x5
207
B 3x8
B 3x5
K 3x6
B 3x5
SWø3
(for CE only)
205
B 3x5
B 3x6
RK 4x16
206
208
B 3x5
203
209
204
B 4x5
210
211
A
B 3x5
B 3x5
SWø4
B 4x5
201
207
B 3x8
A

No.	Part No.	SP	Description
201	A-8278-597-B	o	COVER ASSY, BOTTOM
202	A-8278-603-B	o	COVER TOP, ASSY
203	A-8322-093-A	o	MOUNTED CIRCUIT BOARD, MB-693A S/N 11001 and Higher (for UC) S/N 31001 and Higher (for J) S/N 41001 and Higher (for CE)
	A-8315-052-A	o	MOUNTED CIRCUIT BOARD, MB-693 S/N 10001 through 11000 (for UC) S/N 30001 through 31000 (for J) S/N 40001 through 41000 (for CE)
204	X-3679-297-2	o	BOTTOM CHASSIS, SUBASSY
205	1-233-915-11	s	FILTER, MPX
206	2-253-306-31	o	TABLE, HANDLE
207	3-143-272-02	s	FOOT, RUBBER
208	3-419-372-31	s	HANDLE
209	3-608-374-01	o	CHASSIS, TOP
210	3-613-164-00	o	SHAFT, STEP
211	3-673-676-31	o	RAIL, PC BOARD GUIDE

REAR PANEL

Applicable Serial No.
11001 and Higher (for UC)
31001 and Higher (for J)
41001 and Higher (for CE)

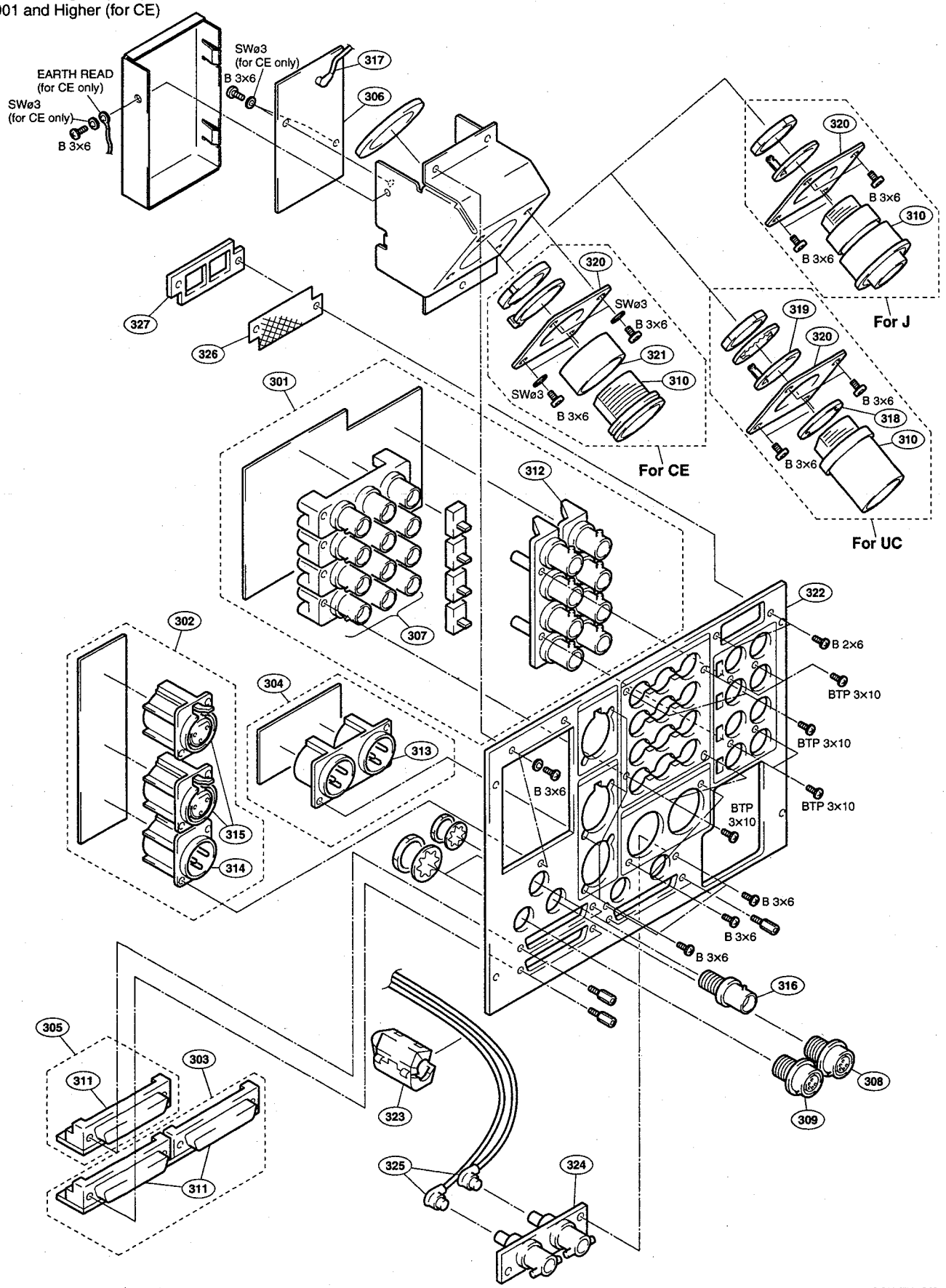

No.	Part No.	SP	Description
301	A-8322-094-A	o	MOUNTED CIRCUIT BOARD, CN-1325A
302	A-8315-044-A	o	MOUNTED CIRCUIT BOARD, CN-1327
303	A-8315-045-A	o	MOUNTED CIRCUIT BOARD, CN-1328 [For UC, CE]
	A-8315-059-A	o	MOUNTED CIRCUIT BOARD, CN-1328 [For J]
304	A-8315-046-A	o	MOUNTED CIRCUIT BOARD, CN-1351
305	A-8315-047-A	o	MOUNTED CIRCUIT BOARD, CN-1350 [For UC]
	A-8315-060-A	o	MOUNTED CIRCUIT BOARD, CN-1350 [For J, CE]
306	A-8315-048-A	o	MOUNTED CIRCUIT BOARD, IO-140
307	1-573-584-11	s	CONNECTOR, BNC "PIX" "WF" " VBS1/2" "SYNC" "G/Y/Y" "R/R-Y/C" "B/B-Y"
308	1-561-376-00	s	CONNECTOR, 4P FEMALE "WF MODE"
309	1-562-782-21	s	CONNECTOR, 10P FEMALE "REMOTE"
310	1-565-796-11	s	CONNECTOR, DOUBLE COAXIAL "TRIAX" [For UC]
	1-565-798-12	s	CONNECTOR, DOUBLE COAXIAL "TRIAX" [For J]
	1-560-744-11	s	CONNECTOR, COAXIAL "TRIAX" [For CE]
311	1-569-713-11	s	CONNECTOR, D-SUB 25P FEMALE "INTERCOM/TALLY" "RS-232C CH1/CH2"
312	1-793-260-11	s	CONNECTOR, BNC "GEN LOCK" "RETURN VIDEO 1/2" "PROMPT VIDEO"
313	1-750-785-11	s	CONNECTOR, XLR 3P MALE "MIC OUT CH1/CH2"
314	1-750-787-11	s	CONNECTOR, XLR 3P MALE "RTS"
315	1-750-788-11	s	CONNECTOR, XLR 3P FEMALE "PGM/RTS"
316	1-774-157-11	s	CONVERTER, COAXIAL CONNECTOR "COAX"
317	1-776-444-11	s	CABLE ASSEMBLY, COAXIAL
318	2-132-244-01	o	SPACER [For UC]
319	2-365-236-00	o	LUG (K), GROUND [For UC]
320	2-365-207-11	o	PLATE(K)(2), CONNECTOR [For J,UC]
	2-361-588-11	o	PLATE(F)(2), CONNECTOR [For CE]
321	2-361-587-11	o	SLEEVE [For CE]
322	3-608-403-02	o	PANEL, REAR
323	1-500-051-11	s	BEAD, FERRITE (WITE CASE)
324	1-750-881-11	s	CONVERTER, COAXIAL CONNECTOR "SDI OUT"
325	1-765-112-12	o	CABLE ASSEMBLY, COAXIAL
326	3-617-683-01	o	COVER, VENTIATOR
327	3-617-684-01	o	COVER RETAINER

REAR PANEL

Applicable Serial No.
10001 through 11000 (for UC)
30001 through 31000 (for J)
40001 through 41000 (for CE)

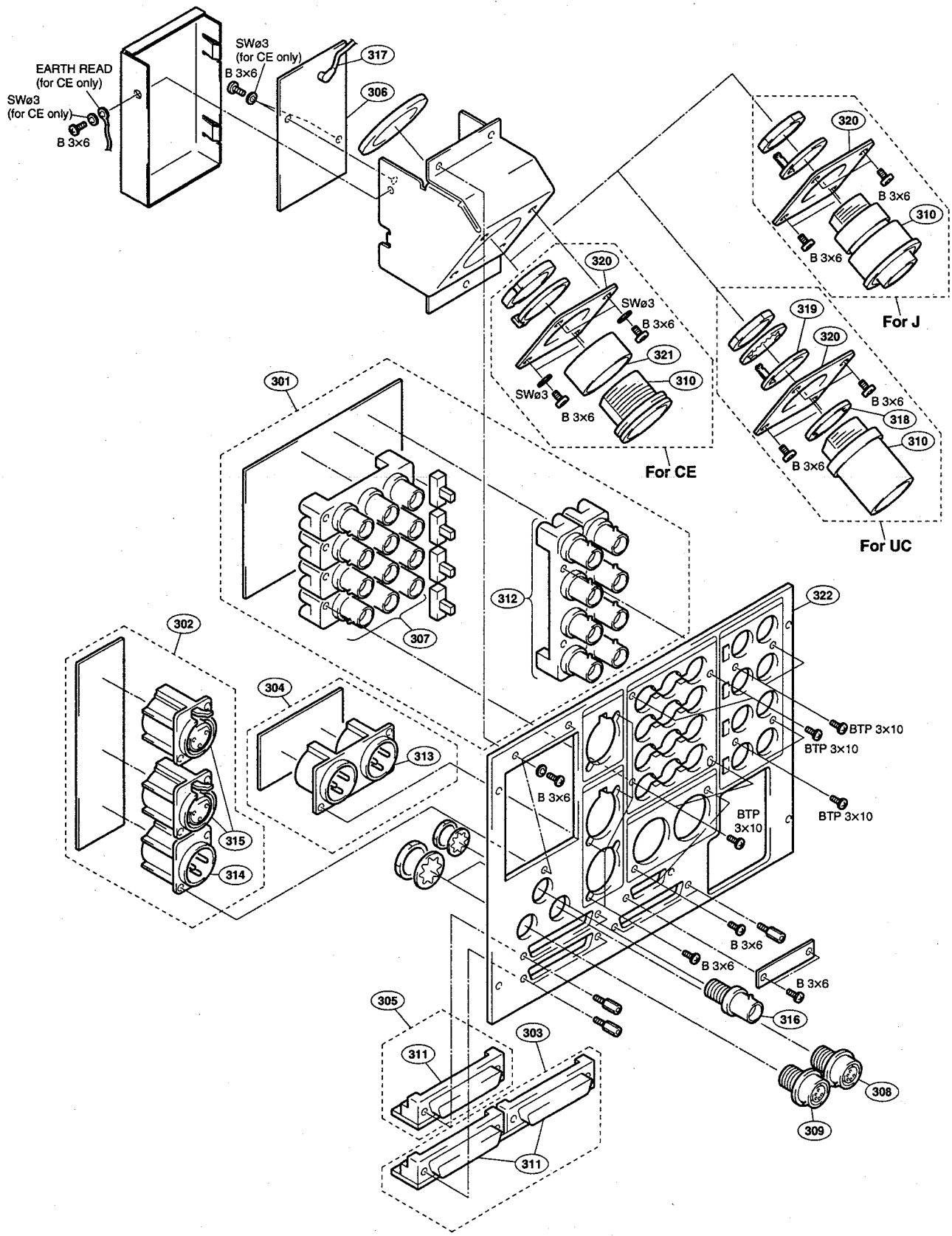

No.	Part No.	SP	Description
301	A-8315-043-A	o	MOUNTED CIRCUIT BOARD, CN-1325
302	A-8315-044-A	o	MOUNTED CIRCUIT BOARD, CN-1327
303	A-8315-045-A	o	MOUNTED CIRCUIT BOARD, CN-1328 [For UC, CE]
	A-8315-059-A	o	MOUNTED CIRCUIT BOARD, CN-1328 [For J]
304	A-8315-046-A	o	MOUNTED CIRCUIT BOARD, CN-1351
305	A-8315-047-A	o	MOUNTED CIRCUIT BOARD, CN-1350 [For UC]
	A-8315-060-A	o	MOUNTED CIRCUIT BOARD, CN-1350 [For J, CE]
306	A-8315-048-A	o	MOUNTED CIRCUIT BOARD, IO-140
307	1-573-584-11	s	CONNECTOR, BNC "PIX" "WF" " VBS1/2" "SYNC" "G/Y/Y" "R/R-Y/C" "B/B-Y"
308	1-561-376-00	s	CONNECTOR, 4P FEMALE "WF MODE"
309	1-562-782-21	s	CONNECTOR, 10P FEMALE "REMOTE"
310	1-565-796-11	s	CONNECTOR, DOUBLE COAXIAL "TRIAX" [For UC]
	1-565-798-12	s	CONNECTOR, DOUBLE COAXIAL "TRIAX" [For J]
	1-560-744-11	s	CONNECTOR, COAXIAL "TRIAX" [For CE]
311	1-569-713-11	s	CONNECTOR, D-SUB 25P FEMALE "INTERCOM/TALLY" "RS-232C CH1/CH2"
312	1-770-081-12	s	CONNECTOR, BNC "GEN LOCK" "RETURN VIDEO 1/2" "PROMPT VIDEO"
313	1-750-785-11	s	CONNECTOR, XLR 3P MALE "MIC OUT CH1/CH2"
314	1-750-787-11	s	CONNECTOR, XLR 3P MALE "RTS"
315	1-750-788-11	s	CONNECTOR, XLR 3P FEMALE "PGM/RTS"
316	1-774-157-11	s	CONVERTER, COAXIAL CONNECTOR "COAX"
317	1-776-444-11	s	CABLE ASSEMBLY, COAXIAL
318	2-132-244-01	o	SPACER [For UC]
319	2-365-236-00	o	LUG (K), GROUND [For UC]
320	2-365-207-11	o	PLATE(K)(2), CONNECTOR [For J,UC]
	2-361-588-11	o	PLATE(F)(2), CONNECTOR [For CE]
321	2-361-587-11	o	SLEEVE [For CE]
322	3-608-403-01	o	PANEL, REAR

SWITCHING REGULATOR

No.	Part No.	SP	Description
401	⚠ 1-468-215-13	s	REGULATOR, SWITCHING
402	1-620-916-11	o	PRINTED CIRCUIT BOARD, PE-18
403	2-990-241-02	s	HOLDER (A), PLUG
404	3-715-610-21	s	KNOB, PS
405	3-715-611-03	o	GURDE, PS
406	9-939-947-01	o	MOUNTED CIRCUIT BOARD, PS-502
407	9-939-948-01	o	MOUNTED CIRCUIT BOARD, PS-503
408	9-939-949-01	o	PRINTED CIRCUIT BOARD, SW (POWER SWITCH)
409	1-698-786-11	s	FAN, DC (60 SQUARE) S/N 11001 and Higher (for UC) S/N 31001 and Higher (for J) S/N 41001 and Higher (for CE)

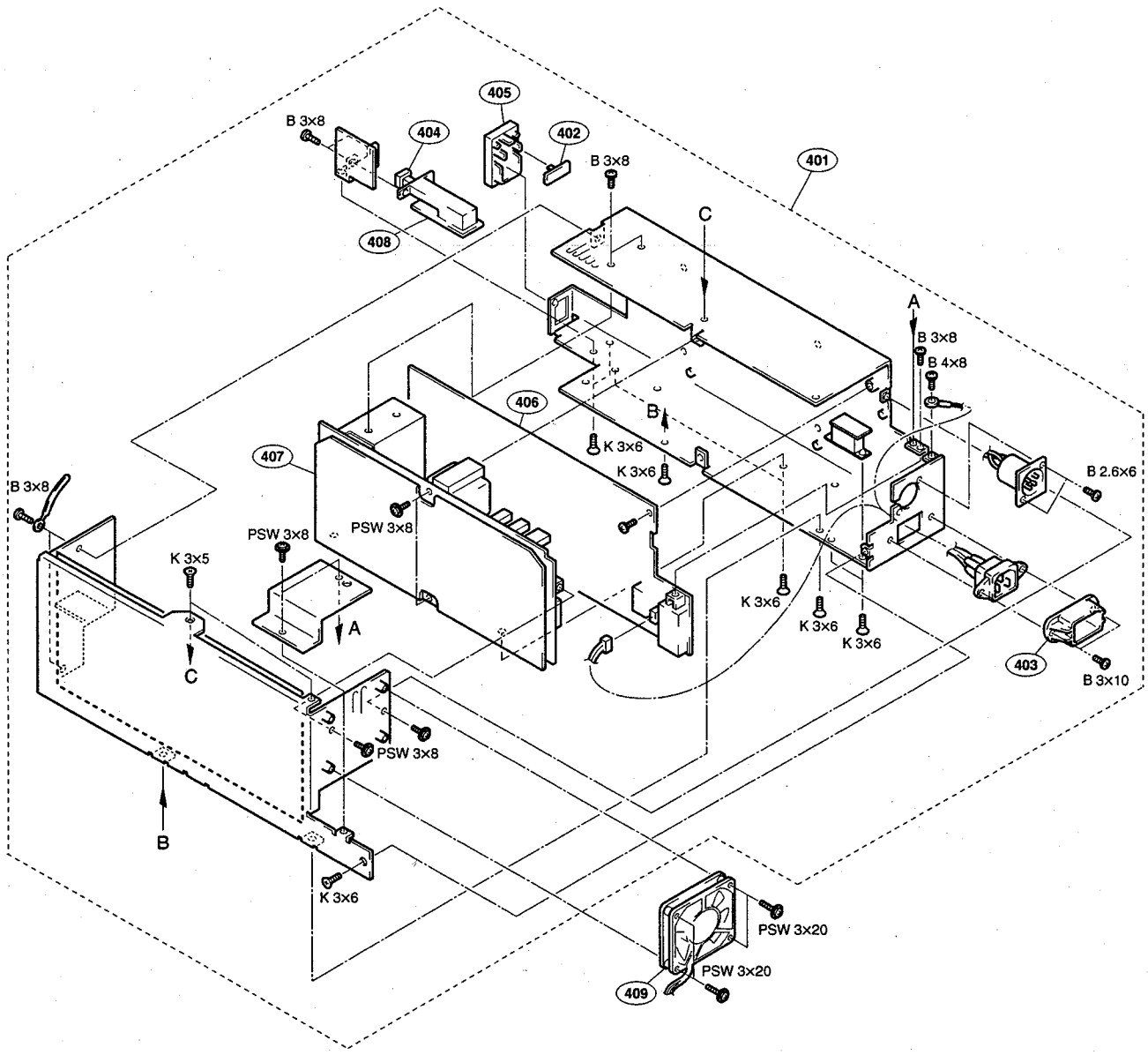

COU-TX7

No.	Part No.	SP	Description
1001	A-8315-069-A	o	MOUNTED CIRCUIT BOARD, SW-892
1002	X-2355-502-1	s	KNOB ASSY, CONTROL
1003	X-2387-004-1	s	KNOB ASSY
1004	X-3679-302-1	s	KNOB, VOLUME ASSY
1005	2-270-659-00	s	MARKER (B)
1006	2-270-660-00	s	MARKER (R)
1007	2-295-991-00	o	GUARD, SWITCH
1008	3-608-397-01	o	COVER, ACRYLIC
1009	3-608-398-03	o	PANEL COU
1010	3-608-400-01	o	CLAMP FCW
1011	3-608-401-01	s	WASHER
1012	3-608-402-11	o	SPACER
1013	4-937-336-21	o	HOLDER, LED

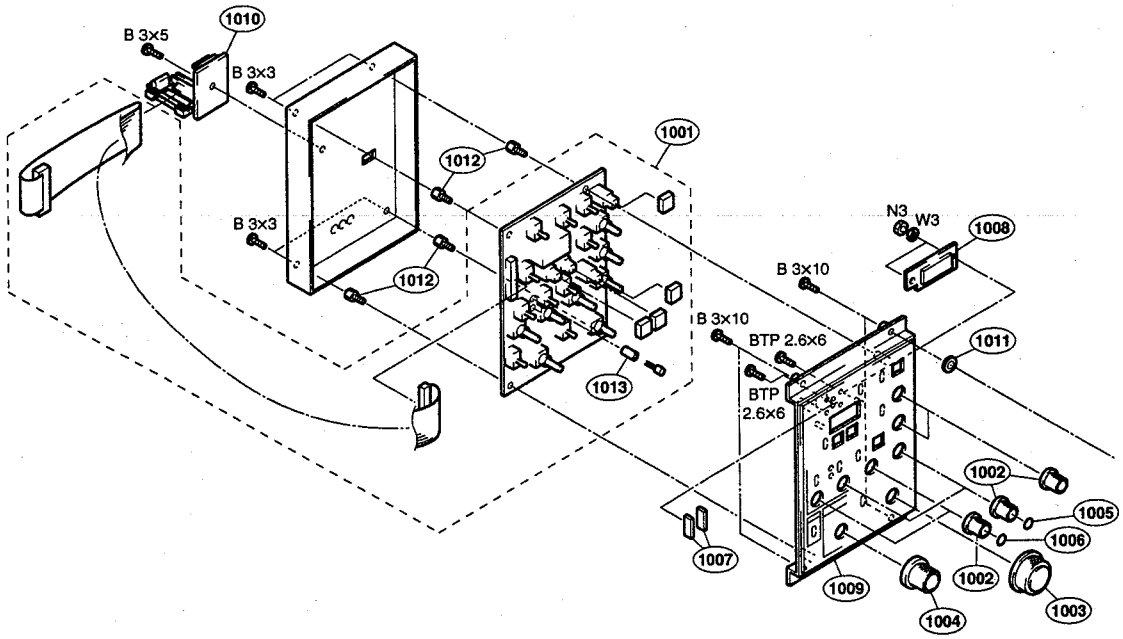

6-3. ELECTRICAL PARTS LIST

6-3-1. CCU-TX7/TX7P

AA-90 BOARD

Ref. No. or Q'ty	Part No.	SP	Description
1pc	A-8315-034-B	o	MOUNTED CIRCUIT BOARD, AA-90
1pc	2-251-622-01	o	LEVER, PC BOARD
1pc	7-682-903-01	s	SCREW +PWH 3X5
3pcs	3-719-381-21	s	SCREW (M2X6)
C1	1-163-038-00	s	CERAMIC, CHIP 0.1uF 25V
C2	1-163-038-00	s	CERAMIC, CHIP 0.1uF 25V
C3	1-163-038-00	s	CERAMIC, CHIP 0.1uF 25V
C4	1-163-251-11	s	CERAMIC, CHIP 100PF 5% 50V
C5	1-163-245-11	s	CERAMIC, CHIP 56PF 5% 50V
C7	1-163-131-00	s	CERAMIC, CHIP 390PF 5% 50V
C8	1-163-038-00	s	CERAMIC, CHIP 0.1uF 25V
C9	1-163-113-00	s	CERAMIC, CHIP 68PF 5% 50V
C10	1-104-852-11	s	TANTALUM, CHIP 22uF 20% 10V
C11	1-163-009-11	s	CERAMIC, CHIP 0.001uF 10% 50V
C12	1-163-009-11	s	CERAMIC, CHIP 0.001uF 10% 50V
C20	1-163-009-11	s	CERAMIC, CHIP 0.001uF 10% 50V
C21	1-163-038-00	s	CERAMIC, CHIP 0.1uF 25V
C22	1-163-038-00	s	CERAMIC, CHIP 0.1uF 25V
C23	1-163-038-00	s	CERAMIC, CHIP 0.1uF 25V
C24	1-163-251-11	s	CERAMIC, CHIP 100PF 5% 50V
C25	1-163-251-11	s	CERAMIC, CHIP 100PF 5% 50V
C26	1-163-131-00	s	CERAMIC, CHIP 390PF 5% 50V
C27	1-163-038-00	s	CERAMIC, CHIP 0.1uF 25V
C28	1-163-113-00	s	CERAMIC, CHIP 68PF 5% 50V
C29	1-163-038-00	s	CERAMIC, CHIP 0.1uF 25V
C30	1-163-989-11	s	CERAMIC, CHIP 0.033uF 10% 25V
C31	1-163-009-11	s	CERAMIC, CHIP 0.001uF 10% 50V
C32	1-104-852-11	s	TANTALUM, CHIP 22uF 20% 10V
C33	1-163-235-11	s	CERAMIC, CHIP 22PF 5% 50V
C41	1-163-038-00	s	CERAMIC, CHIP 0.1uF 25V
C42	1-163-038-00	s	CERAMIC, CHIP 0.1uF 25V
C43	1-163-251-11	s	CERAMIC, CHIP 100PF 5% 50V
C45	1-163-131-00	s	CERAMIC, CHIP 390PF 5% 50V
C46	1-163-038-00	s	CERAMIC, CHIP 0.1uF 25V
C47	1-163-113-00	s	CERAMIC, CHIP 68PF 5% 50V
C48	1-163-038-00	s	CERAMIC, CHIP 0.1uF 25V
C49	1-135-177-21	s	TANTALUM, CHIP 1uF 10% 25V
C50	1-104-852-11	s	TANTALUM, CHIP 22uF 20% 10V
C81	1-163-038-00	s	CERAMIC, CHIP 0.1uF 25V
C82	1-163-038-00	s	CERAMIC, CHIP 0.1uF 25V
C83	1-163-251-11	s	CERAMIC, CHIP 100PF 5% 50V
C84	1-163-227-11	s	CERAMIC, CHIP 10PF 0.5PF 50V
C85	1-163-131-00	s	CERAMIC, CHIP 390PF 5% 50V
C86	1-163-038-00	s	CERAMIC, CHIP 0.1uF 25V
C87	1-163-113-00	s	CERAMIC, CHIP 68PF 5% 50V
C88	1-163-038-00	s	CERAMIC, CHIP 0.1uF 25V
C89	1-135-177-21	s	TANTALUM, CHIP 1uF 10% 25V
C90	1-104-852-11	s	TANTALUM, CHIP 22uF 20% 10V
C101	1-163-038-00	s	CERAMIC, CHIP 0.1uF 25V
C102	1-163-038-00	s	CERAMIC, CHIP 0.1uF 25V
C103	1-163-243-11	s	CERAMIC, CHIP 47PF 5% 50V
C104	1-163-038-00	s	CERAMIC, CHIP 0.1uF 25V
C105	1-163-038-00	s	CERAMIC, CHIP 0.1uF 25V
C106	1-163-038-00	s	CERAMIC, CHIP 0.1uF 25V
C107	1-163-038-00	s	CERAMIC, CHIP 0.1uF 25V
C108	1-163-241-11	s	CERAMIC, CHIP 39PF 5% 50V
C109	1-163-231-11	s	CERAMIC, CHIP 15PF 5% 50V
C110	1-163-021-91	s	CERAMIC 0.01uF 10% 50V
C111	1-163-021-91	s	CERAMIC 0.01uF 10% 50V

(AA-90 BOARD)

Ref. No. or Q'ty	Part No.	SP	Description
C112	1-163-038-00	s	CERAMIC, CHIP 0.1uF 25V
C113	1-135-177-21	s	TANTALUM, CHIP 1uF 10% 25V
C114	1-104-823-11	s	TANTALUM, CHIP 47uF 20% 16V
C115	1-163-125-00	s	CERAMIC, CHIP 220PF 5% 50V
C116	1-163-263-11	s	CERAMIC, CHIP 330PF 5% 50V
C117	1-163-245-11	s	CERAMIC, CHIP 56PF 5% 50V
C118	1-163-227-11	s	CERAMIC, CHIP 10PF 0.5PF 50V
C119	1-163-133-00	s	CERAMIC, CHIP 470PF 5% 50V
C120	1-104-852-11	s	TANTALUM, CHIP 22uF 20% 10V
C126	1-163-038-00	s	CERAMIC, CHIP 0.1uF 25V
C127	1-163-037-11	s	CERAMIC, CHIP 0.022uF 10% 25V
C128	1-164-690-91	s	CHIP, CERAMIC 0.0022uF 5% 50V
C129	1-163-038-00	s	CERAMIC, CHIP 0.1uF 25V
C130	1-164-690-91	s	CHIP, CERAMIC 0.0022uF 5% 50V
C131	1-164-690-91	s	CHIP, CERAMIC 0.0022uF 5% 50V
C132	1-164-690-91	s	CHIP, CERAMIC 0.0022uF 5% 50V
C133	1-135-181-21	s	TANTALUM, CHIP 4.7uF 10% 6.3V
C134	1-135-181-21	s	TANTALUM, CHIP 4.7uF 10% 6.3V
C135	1-104-852-11	s	TANTALUM, CHIP 22uF 20% 10V
C136	1-104-852-11	s	TANTALUM, CHIP 22uF 20% 10V
C137	1-104-852-11	s	TANTALUM, CHIP 22uF 20% 10V
C138	1-128-391-11	s	ELECT 330uF 20% 6.3V
C139	1-104-852-11	s	TANTALUM, CHIP 22uF 20% 10V
C140	1-135-181-21	s	TANTALUM, CHIP 4.7uF 10% 6.3V
C141	1-164-690-91	s	CHIP, CERAMIC 0.0022uF 5% 50V
C142	1-164-690-91	s	CHIP, CERAMIC 0.0022uF 5% 50V
C143	1-164-690-91	s	CHIP, CERAMIC 0.0022uF 5% 50V
C145	1-163-019-00	s	CERAMIC, CHIP 0.0068uF 10% 50V
C201	1-163-038-00	s	CERAMIC, CHIP 0.1uF 25V
C202	1-163-038-00	s	CERAMIC, CHIP 0.1uF 25V
C203	1-163-243-11	s	CERAMIC, CHIP 47PF 5% 50V
C204	1-163-038-00	s	CERAMIC, CHIP 0.1uF 25V
C205	1-163-038-00	s	CERAMIC, CHIP 0.1uF 25V
C206	1-104-852-11	s	TANTALUM, CHIP 22uF 20% 10V
C207	1-163-038-00	s	CERAMIC, CHIP 0.1uF 25V
C208	1-163-038-00	s	CERAMIC, CHIP 0.1uF 25V
C209	1-163-038-00	s	CERAMIC, CHIP 0.1uF 25V
C210	1-135-177-21	s	TANTALUM, CHIP 1uF 10% 25V
C211	1-163-038-00	s	CERAMIC, CHIP 0.1uF 25V
C212	1-135-177-21	s	TANTALUM, CHIP 1uF 10% 25V
C213	1-135-070-00	s	TANTALUM, CHIP 0.1uF 10% 35V
C214	1-135-177-21	s	TANTALUM, CHIP 1uF 10% 25V
C215	1-128-391-11	s	ELECT 330uF 20% 6.3V
C216	1-135-070-00	s	TANTALUM, CHIP 0.1uF 10% 35V
C217	1-164-690-91	s	CHIP, CERAMIC 0.0022uF 5% 50V
C218	1-163-038-00	s	CERAMIC, CHIP 0.1uF 25V
C219	1-163-131-00	s	CERAMIC, CHIP 390PF 5% 50V
C220	1-135-177-21	s	TANTALUM, CHIP 1uF 10% 25V
C221	1-104-852-11	s	TANTALUM, CHIP 22uF 20% 10V
C222	1-163-133-00	s	CERAMIC, CHIP 470PF 5% 50V
C223	1-163-243-11	s	CERAMIC, CHIP 47PF 5% 50V
C224	1-113-991-11	s	TANTALUM, CHIP 33uF 20% 16V
C225	1-113-991-11	s	TANTALUM, CHIP 33uF 20% 16V
C301	1-163-038-00	s	CERAMIC, CHIP 0.1uF 25V
C302	1-163-038-00	s	CERAMIC, CHIP 0.1uF 25V
C303	1-163-243-11	s	CERAMIC, CHIP 47PF 5% 50V
C304	1-163-038-00	s	CERAMIC, CHIP 0.1uF 25V
C305	1-163-038-00	s	CERAMIC, CHIP 0.1uF 25V
C306	1-104-852-11	s	TANTALUM, CHIP 22uF 20% 10V

(AA-90 BOARD)

Ref. No. or Q'ty	Part No.	SP	Description
C307	1-163-038-00	s	CERAMIC, CHIP 0.1uF 25V
C308	1-163-038-00	s	CERAMIC, CHIP 0.1uF 25V
C309	1-163-038-00	s	CERAMIC, CHIP 0.1uF 25V
C310	1-135-177-21	s	TANTALUM, CHIP 1uF 10% 25V
C311	1-163-038-00	s	CERAMIC, CHIP 0.1uF 25V
C312	1-135-177-21	s	TANTALUM, CHIP 1uF 10% 25V
C313	1-135-070-00	s	TANTALUM, CHIP 0.1uF 10% 35V
C314	1-135-177-21	s	TANTALUM, CHIP 1uF 10% 25V
C315	1-128-391-11	s	ELECT 330uF 20% 6.3V
C316	1-135-070-00	s	TANTALUM, CHIP 0.1uF 10% 35V
C317	1-164-690-91	s	CHIP, CERAMIC 0.0022uF 5% 50V
C318	1-163-038-00	s	CERAMIC, CHIP 0.1uF 25V
C319	1-163-131-00	s	CERAMIC, CHIP 390PF 5% 50V
C320	1-135-177-21	s	TANTALUM, CHIP 1uF 10% 25V
C321	1-104-852-11	s	TANTALUM, CHIP 22uF 20% 10V
C322	1-163-133-00	s	CERAMIC, CHIP 470PF 5% 50V
C323	1-163-243-11	s	CERAMIC, CHIP 47PF 5% 50V
C324	1-113-991-11	s	TANTALUM, CHIP 33uF 20% 16V
C325	1-113-991-11	s	TANTALUM, CHIP 33uF 20% 16V
C401	1-163-038-00	s	CERAMIC, CHIP 0.1uF 25V
C402	1-163-038-00	s	CERAMIC, CHIP 0.1uF 25V
C403	1-163-243-11	s	CERAMIC, CHIP 47PF 5% 50V
C404	1-163-038-00	s	CERAMIC, CHIP 0.1uF 25V
C405	1-163-038-00	s	CERAMIC, CHIP 0.1uF 25V
C406	1-104-852-11	s	TANTALUM, CHIP 22uF 20% 10V
C407	1-163-038-00	s	CERAMIC, CHIP 0.1uF 25V
C408	1-163-038-00	s	CERAMIC, CHIP 0.1uF 25V
C409	1-163-038-00	s	CERAMIC, CHIP 0.1uF 25V
C410	1-135-177-21	s	TANTALUM, CHIP 1uF 10% 25V
C411	1-163-038-00	s	CERAMIC, CHIP 0.1uF 25V
C412	1-135-177-21	s	TANTALUM, CHIP 1uF 10% 25V
C413	1-135-070-00	s	TANTALUM, CHIP 0.1uF 10% 35V
C414	1-135-177-21	s	TANTALUM, CHIP 1uF 10% 25V
C415	1-128-391-11	s	ELECT 330uF 20% 6.3V
C416	1-163-239-11	s	CERAMIC, CHIP 33PF 5% 50V
C417	1-135-070-00	s	TANTALUM, CHIP 0.1uF 10% 35V
C418	1-163-038-00	s	CERAMIC, CHIP 0.1uF 25V
C419	1-163-131-00	s	CERAMIC, CHIP 390PF 5% 50V
C420	1-164-690-91	s	CHIP, CERAMIC 0.0022uF 5% 50V
C421	1-104-852-11	s	TANTALUM, CHIP 22uF 20% 10V
C423	1-163-089-00	s	CERAMIC, CHIP 6PF 0.5PF 50V
C601	1-163-038-00	s	CERAMIC, CHIP 0.1uF 25V
C603	1-163-222-11	s	CERAMIC, CHIP 5PF 0.5PF 50V
C605	1-163-038-00	s	CERAMIC, CHIP 0.1uF 25V
C608	1-163-038-00	s	CERAMIC, CHIP 0.1uF 25V
C2000	1-126-391-11	s	ELECT 47uF 20% 6.3V
C2001	1-126-391-11	s	ELECT 47uF 20% 6.3V
C2085	1-163-017-00	s	CERAMIC, CHIP 0.0047uF 10% 50V
C2086	1-126-390-11	s	ELECT, CHIP 22uF 20% 6.3V
C2087	1-126-390-11	s	ELECT, CHIP 22uF 20% 6.3V
C2211	1-123-566-00	s	ELECT 2200uF 20% 16V
C2212	1-123-566-00	s	ELECT 2200uF 20% 16V
C2213	1-126-395-11	s	ELECT 22uF 20% 16V
C2214	1-126-395-11	s	ELECT 22uF 20% 16V
C2215	1-126-395-11	s	ELECT 22uF 20% 16V
C2216	1-126-395-11	s	ELECT 22uF 20% 16V
C2217	1-113-991-11	s	TANTALUM, CHIP 33uF 20% 16V
C2218	1-113-991-11	s	TANTALUM, CHIP 33uF 20% 16V
C2241	1-104-823-11	s	TANTALUM, CHIP 47uF 20% 16V

(AA-90 BOARD)

Ref. No. or Q'ty	Part No.	SP	Description
C2242	1-126-400-11	s	ELECT, CHIP 22uF 20% 35V
C2243	1-126-400-11	s	ELECT, CHIP 22uF 20% 35V
C2244	1-126-395-11	s	ELECT 22uF 20% 16V
C2245	1-126-395-11	s	ELECT 22uF 20% 16V
C2252	1-104-823-11	s	TANTALUM, CHIP 47uF 20% 16V
C2253	1-126-400-11	s	ELECT, CHIP 22uF 20% 35V
C2254	1-126-400-11	s	ELECT, CHIP 22uF 20% 35V
C2271	1-128-397-21	s	ELECT 100uF 20% 16V
C2272	1-128-397-21	s	ELECT 100uF 20% 16V
C2273	1-128-397-21	s	ELECT 100uF 20% 16V
C2274	1-128-397-21	s	ELECT 100uF 20% 16V
C2275	1-126-395-11	s	ELECT 22uF 20% 16V
C2276	1-126-395-11	s	ELECT 22uF 20% 16V
C2451	1-123-566-00	s	ELECT 2200uF 20% 16V
C2452	1-123-566-00	s	ELECT 2200uF 20% 16V
C2453	1-126-395-11	s	ELECT 22uF 20% 16V
C2454	1-126-395-11	s	ELECT 22uF 20% 16V
C2455	1-126-395-11	s	ELECT 22uF 20% 16V
C2456	1-126-395-11	s	ELECT 22uF 20% 16V
C2457	1-113-991-11	s	TANTALUM, CHIP 33uF 20% 16V
C2458	1-113-991-11	s	TANTALUM, CHIP 33uF 20% 16V
C2541	1-104-823-11	s	TANTALUM, CHIP 47uF 20% 16V
C2542	1-126-400-11	s	ELECT, CHIP 22uF 20% 35V
C2543	1-126-400-11	s	ELECT, CHIP 22uF 20% 35V
C2544	1-126-395-11	s	ELECT 22uF 20% 16V
C2545	1-126-395-11	s	ELECT 22uF 20% 16V
C2546	1-104-823-11	s	TANTALUM, CHIP 47uF 20% 16V
C2547	1-126-400-11	s	ELECT, CHIP 22uF 20% 35V
C2548	1-126-400-11	s	ELECT, CHIP 22uF 20% 35V
C2581	1-128-397-21	s	ELECT 100uF 20% 16V
C2582	1-128-397-21	s	ELECT 100uF 20% 16V
C2583	1-128-397-21	s	ELECT 100uF 20% 16V
C2584	1-128-397-21	s	ELECT 100uF 20% 16V
C2585	1-126-395-11	s	ELECT 22uF 20% 16V
C2586	1-126-395-11	s	ELECT 22uF 20% 16V
C2600	1-126-390-11	s	ELECT, CHIP 22uF 20% 6.3V
C2601	1-126-390-11	s	ELECT, CHIP 22uF 20% 6.3V
C2602	1-126-390-11	s	ELECT, CHIP 22uF 20% 6.3V
C2603	1-126-390-11	s	ELECT, CHIP 22uF 20% 6.3V
C2604	1-126-390-11	s	ELECT, CHIP 22uF 20% 6.3V
C2605	1-126-390-11	s	ELECT, CHIP 22uF 20% 6.3V
C2606	1-126-390-11	s	ELECT, CHIP 22uF 20% 6.3V
C2607	1-126-390-11	s	ELECT, CHIP 22uF 20% 6.3V
C2610	1-126-390-11	s	ELECT, CHIP 22uF 20% 6.3V
C2611	1-126-390-11	s	ELECT, CHIP 22uF 20% 6.3V
C2612	1-126-391-11	s	ELECT 47uF 20% 6.3V
C2613	1-163-038-00	s	CERAMIC, CHIP 0.1uF 25V
C2614	1-126-390-11	s	ELECT, CHIP 22uF 20% 6.3V
C2615	1-126-390-11	s	ELECT, CHIP 22uF 20% 6.3V
C2616	1-126-390-11	s	ELECT, CHIP 22uF 20% 6.3V
C2617	1-126-390-11	s	ELECT, CHIP 22uF 20% 6.3V
C2618	1-163-137-00	s	CERAMIC, CHIP 680PF 5% 50V
C2619	1-163-137-00	s	CERAMIC, CHIP 680PF 5% 50V
C2620	1-163-038-00	s	CERAMIC, CHIP 0.1uF 25V
C2621	1-163-038-00	s	CERAMIC, CHIP 0.1uF 25V
C2622	1-163-137-00	s	CERAMIC, CHIP 680PF 5% 50V
C2623	1-126-390-11	s	ELECT, CHIP 22uF 20% 6.3V
C2624	1-126-390-11	s	ELECT, CHIP 22uF 20% 6.3V
C2625	1-104-823-11	s	TANTALUM, CHIP 47uF 20% 16V

(AA-90 BOARD)

Ref. No. or Q'ty	Part No.	SP	Description
C2626	1-104-823-11	s	TANTALUM, CHIP 47uF 20% 16V
C2627	1-104-852-11	s	TANTALUM, CHIP 22uF 20% 10V
C2628	1-104-852-11	s	TANTALUM, CHIP 22uF 20% 10V
C2629	1-126-390-11	s	ELECT, CHIP 22uF 20% 6.3V
C2630	1-126-390-11	s	ELECT, CHIP 22uF 20% 6.3V
C2631	1-104-823-11	s	TANTALUM, CHIP 47uF 20% 16V
C2632	1-104-823-11	s	TANTALUM, CHIP 47uF 20% 16V
C2633	1-104-852-11	s	TANTALUM, CHIP 22uF 20% 10V
C2634	1-104-852-11	s	TANTALUM, CHIP 22uF 20% 10V
C2635	1-163-038-00	s	CERAMIC, CHIP 0.1uF 25V
C2636	1-163-038-00	s	CERAMIC, CHIP 0.1uF 25V
C2637	1-163-038-00	s	CERAMIC, CHIP 0.1uF 25V
C2638	1-163-038-00	s	CERAMIC, CHIP 0.1uF 25V
C2639	1-163-038-00	s	CERAMIC, CHIP 0.1uF 25V
C2640	1-163-038-00	s	CERAMIC, CHIP 0.1uF 25V
C2641	1-163-038-00	s	CERAMIC, CHIP 0.1uF 25V
C2642	1-163-038-00	s	CERAMIC, CHIP 0.1uF 25V
C2643	1-163-038-00	s	CERAMIC, CHIP 0.1uF 25V
C2644	1-163-038-00	s	CERAMIC, CHIP 0.1uF 25V
C2645	1-163-038-00	s	CERAMIC, CHIP 0.1uF 25V
C2646	1-163-038-00	s	CERAMIC, CHIP 0.1uF 25V
C2647	1-163-038-00	s	CERAMIC, CHIP 0.1uF 25V
C2648	1-163-038-00	s	CERAMIC, CHIP 0.1uF 25V
C2649	1-163-038-00	s	CERAMIC, CHIP 0.1uF 25V
C2650	1-163-038-00	s	CERAMIC, CHIP 0.1uF 25V
C2651	1-163-038-00	s	CERAMIC, CHIP 0.1uF 25V
C2652	1-163-038-00	s	CERAMIC, CHIP 0.1uF 25V
C2653	1-163-038-00	s	CERAMIC, CHIP 0.1uF 25V
C2654	1-163-038-00	s	CERAMIC, CHIP 0.1uF 25V
C2655	1-163-038-00	s	CERAMIC, CHIP 0.1uF 25V
C2656	1-163-038-00	s	CERAMIC, CHIP 0.1uF 25V
C2657	1-163-038-00	s	CERAMIC, CHIP 0.1uF 25V
C2658	1-163-038-00	s	CERAMIC, CHIP 0.1uF 25V
C2659	1-163-038-00	s	CERAMIC, CHIP 0.1uF 25V
C2660	1-163-038-00	s	CERAMIC, CHIP 0.1uF 25V
C2661	1-163-038-00	s	CERAMIC, CHIP 0.1uF 25V
C2662	1-163-038-00	s	CERAMIC, CHIP 0.1uF 25V
C2663	1-163-038-00	s	CERAMIC, CHIP 0.1uF 25V
C2664	1-163-038-00	s	CERAMIC, CHIP 0.1uF 25V
C2665	1-163-038-00	s	CERAMIC, CHIP 0.1uF 25V
C2666	1-163-038-00	s	CERAMIC, CHIP 0.1uF 25V
C2667	1-163-038-00	s	CERAMIC, CHIP 0.1uF 25V
C2668	1-163-038-00	s	CERAMIC, CHIP 0.1uF 25V
C2669	1-163-038-00	s	CERAMIC, CHIP 0.1uF 25V
C2670	1-163-038-00	s	CERAMIC, CHIP 0.1uF 25V
C2671	1-163-038-00	s	CERAMIC, CHIP 0.1uF 25V
C2672	1-163-038-00	s	CERAMIC, CHIP 0.1uF 25V
C2673	1-163-038-00	s	CERAMIC, CHIP 0.1uF 25V
C2674	1-163-038-00	s	CERAMIC, CHIP 0.1uF 25V
C2675	1-163-038-00	s	CERAMIC, CHIP 0.1uF 25V
C2676	1-163-038-00	s	CERAMIC, CHIP 0.1uF 25V
C3001	1-126-396-11	s	ELECT, CHIP 47uF 20% 16V
C3002	1-126-396-11	s	ELECT, CHIP 47uF 20% 16V
C3003	1-126-391-11	s	ELECT 47uF 20% 6.3V
C3004	1-126-391-11	s	ELECT 47uF 20% 6.3V
C3005	1-113-991-11	s	TANTALUM, CHIP 33uF 20% 16V
C3006	1-126-391-11	s	ELECT 47uF 20% 6.3V
C3007	1-135-177-21	s	TANTALUM, CHIP 1uF 10% 25V
C3008	1-126-396-11	s	ELECT, CHIP 47uF 20% 16V

(AA-90 BOARD)

Ref. No. or Q'ty	Part No.	SP	Description
C3009	1-104-852-11	s	TANTALUM, CHIP 22uF 20% 10V
C3010	1-126-396-11	s	ELECT, CHIP 47uF 20% 16V
C3011	1-126-396-11	s	ELECT, CHIP 47uF 20% 16V
C3012	1-126-391-11	s	ELECT 47uF 20% 6.3V
C3013	1-126-391-11	s	ELECT 47uF 20% 6.3V
C3014	1-126-391-11	s	ELECT 47uF 20% 6.3V
C3015	1-135-177-21	s	TANTALUM, CHIP 1uF 10% 25V
C3016	1-126-396-11	s	ELECT, CHIP 47uF 20% 16V
C3017	1-163-038-00	s	CERAMIC, CHIP 0.1uF 25V
C3019	1-163-038-00	s	CERAMIC, CHIP 0.1uF 25V
C3020	1-163-038-00	s	CERAMIC, CHIP 0.1uF 25V
C3021	1-135-179-21	s	TANTALUM, CHIP 2.2uF 10% 16V
C3022	1-135-179-21	s	TANTALUM, CHIP 2.2uF 10% 16V
C3023	1-163-038-00	s	CERAMIC, CHIP 0.1uF 25V
C3024	1-163-038-00	s	CERAMIC, CHIP 0.1uF 25V
C3025	1-135-179-21	s	TANTALUM, CHIP 2.2uF 10% 16V
C3026	1-135-179-21	s	TANTALUM, CHIP 2.2uF 10% 16V
CF41	1-760-443-11	s	FILTER, CERAMIC 3.600MHz
CF81	1-760-445-11	s	FILTER, CERAMIC 4.300MHz
CF101	1-760-446-11	s	FILTER, CERAMIC 5.600MHz
CF102	1-760-446-11	s	FILTER, CERAMIC 5.600MHz
CF201	1-760-447-12	s	FILTER, CERAMIC
CF202	1-760-447-12	s	FILTER, CERAMIC
CF301	1-578-067-11	s	FILTER, CERAMIC 6.700MHz
CF302	1-578-067-11	s	FILTER, CERAMIC 6.700MHz
CF401	1-578-068-12	s	FILTER, CERAMIC 7.100MHz
CF402	1-578-068-12	s	FILTER, CERAMIC 7.100MHz
CN2	1-766-703-11	s	CONNECTOR, COAXIAL
CN3	1-766-703-11	s	CONNECTOR, COAXIAL
D1	8-719-800-76	s	DIODE 1SS226
D2	8-719-041-39	s	DIODE KV1470
D21	8-719-800-76	s	DIODE 1SS226
D22	8-719-041-39	s	DIODE KV1470
D23	8-719-800-76	s	DIODE 1SS226
D41	8-719-800-76	s	DIODE 1SS226
D42	8-719-041-39	s	DIODE KV1470
D43	8-719-800-76	s	DIODE 1SS226
D81	8-719-800-76	s	DIODE 1SS226
D82	8-719-041-39	s	DIODE KV1470
D83	8-719-800-76	s	DIODE 1SS226
D601	8-719-800-76	s	DIODE 1SS226
D2000	8-719-159-85	s	DIODE RD2.0MB
D2001	8-719-159-85	s	DIODE RD2.0MB
D2002	8-719-159-85	s	DIODE RD2.0MB
D2003	8-719-159-85	s	DIODE RD2.0MB
D2005	8-719-801-78	s	DIODE 1SS184
D2006	8-719-801-78	s	DIODE 1SS184
D2007	8-719-801-78	s	DIODE 1SS184
D2008	8-719-801-78	s	DIODE 1SS184
D2081	8-719-159-85	s	DIODE RD2.0MB
D2082	8-719-159-85	s	DIODE RD2.0MB
D2181	8-719-159-85	s	DIODE RD2.0MB
D2182	8-719-159-85	s	DIODE RD2.0MB
D2421	8-719-159-85	s	DIODE RD2.0MB
D2422	8-719-159-85	s	DIODE RD2.0MB
D3001	8-719-800-13	s	DIODE TLUR163
D3002	8-719-800-13	s	DIODE TLUR163
D3003	8-719-157-23	s	DIODE RD4.7M-B

(AA-90 BOARD)

Ref. No. or Q'ty	Part No.	SP	Description
D3005	8-719-106-53	s	DIODE RD10M-B2
D3006	8-719-800-13	s	DIODE TLUR163
D3007	8-719-800-13	s	DIODE TLUR163
D3008	8-719-157-23	s	DIODE RD4.7M-B
D3009	8-719-106-53	s	DIODE RD10M-B2
D3010	8-719-800-76	s	DIODE 1SS226
D3011	8-719-800-76	s	DIODE 1SS226
D3012	8-719-800-76	s	DIODE 1SS226
D3013	8-719-800-76	s	DIODE 1SS226
D3014	8-719-157-23	s	DIODE RD4.7M-B
D3015	8-719-981-49	s	DIODE GL3ED8
D3017	8-719-800-76	s	DIODE 1SS226
D3018	8-719-157-23	s	DIODE RD4.7M-B
D3019	8-719-981-49	s	DIODE GL3ED8
FL1	1-239-941-11	s	FILTER, BAND PASS 3.0MHz
FL21	1-239-940-11	s	FILTER, BAND PASS 2.5MHz
FL601	1-417-189-11	s	SEPARATOR
IC101	8-759-271-14	s	IC TA8129Z
IC102	8-759-906-53	s	IC TL062CPS
IC103	8-759-100-93	s	IC UPC393G2
IC104	8-759-906-53	s	IC TL062CPS
IC105	8-759-710-52	s	IC NJM567M
IC201	8-759-812-35	s	IC LA1235
IC202	8-759-745-64	s	IC NJM4560M
IC301	8-759-812-35	s	IC LA1235
IC302	8-759-745-64	s	IC NJM4560M
IC401	8-759-812-35	s	IC LA1235
IC402	8-759-100-96	s	IC UPC4558G2
IC600	8-759-054-61	s	IC CLC505AJE
IC2000	8-759-009-07	s	IC MC14053BF
IC2001	8-759-100-96	s	IC UPC4558G2
IC2002	8-759-100-96	s	IC UPC4558G2
IC2003	8-759-100-96	s	IC UPC4558G2
IC2004	8-759-009-07	s	IC MC14053BF
IC2005	8-759-100-96	s	IC UPC4558G2
IC2006	8-759-100-96	s	IC UPC4558G2
IC2007	8-759-100-96	s	IC UPC4558G2
IC2008	8-759-009-07	s	IC MC14053BF
IC2009	8-759-009-07	s	IC MC14053BF
IC2010	8-759-233-44	s	IC TC74HC595AF
IC2011	8-759-100-96	s	IC UPC4558G2
IC2012	8-759-100-96	s	IC UPC4558G2
IC2081	8-759-100-96	s	IC UPC4558G2
IC2181	8-759-100-96	s	IC UPC4558G2
IC2182	8-759-009-07	s	IC MC14053BF
IC2211	8-759-100-96	s	IC UPC4558G2
IC2212	8-759-745-64	s	IC NJM4560M
IC2241	8-759-100-96	s	IC UPC4558G2
IC2242	8-759-745-64	s	IC NJM4560M
IC2271	8-759-745-64	s	IC NJM4560M
IC2421	8-759-100-96	s	IC UPC4558G2
IC2422	8-759-009-07	s	IC MC14053BF
IC2451	8-759-100-96	s	IC UPC4558G2
IC2452	8-759-745-64	s	IC NJM4560M
IC2491	8-759-100-96	s	IC UPC4558G2
IC2492	8-759-745-64	s	IC NJM4560M
IC2521	8-759-745-64	s	IC NJM4560M
IC3001	8-759-906-53	s	IC TL062CPS

(AA-90 BOARD)

Ref. No. or Q'ty	Part No.	SP	Description
IC3002	8-759-906-53	s	IC TL062CPS
IC3003	8-759-236-19	s	IC TC74HC151AF(EL)
IC3004	8-759-906-53	s	IC TL062CPS
IC3005	8-759-085-67	s	IC LM339NS
IC3006	8-759-906-53	s	IC TL062CPS
IC3007	8-759-085-67	s	IC LM339NS
IC3008	8-759-274-67	s	IC LM4040BIM3X-5.0
L1	1-410-381-11	s	INDUCTOR, CHIP 10uH
L21	1-410-381-11	s	INDUCTOR, CHIP 10uH
L41	1-410-381-11	s	INDUCTOR, CHIP 10uH
L81	1-410-381-11	s	INDUCTOR, CHIP 10uH
L101	1-410-381-11	s	INDUCTOR, CHIP 10uH
L102	1-410-381-11	s	INDUCTOR, CHIP 10uH
L103	1-410-145-11	s	MICRO INDUCTOR 18uH
L201	1-410-381-11	s	INDUCTOR, CHIP 10uH
L202	1-410-381-11	s	INDUCTOR, CHIP 10uH
L203	1-410-148-11	s	MICRO INDUCTOR 33uH
L204	1-410-144-11	s	MICRO INDUCTOR 15uH
L301	1-410-381-11	s	INDUCTOR, CHIP 10uH
L302	1-410-381-11	s	INDUCTOR, CHIP 10uH
L303	1-410-148-11	s	MICRO INDUCTOR 33uH
L304	1-410-143-11	s	MICRO INDUCTOR 12uH
L401	1-410-381-11	s	INDUCTOR, CHIP 10uH
L402	1-410-381-11	s	INDUCTOR, CHIP 10uH
L403	1-410-148-11	s	MICRO INDUCTOR 33uH
L404	1-410-142-11	s	MICRO INDUCTOR 10uH
L601	1-410-381-11	s	INDUCTOR, CHIP 10uH
L602	1-410-381-11	s	INDUCTOR, CHIP 10uH
L2181	1-410-381-11	s	INDUCTOR, CHIP 10uH
L2182	1-410-381-11	s	INDUCTOR, CHIP 10uH
L2183	1-410-381-11	s	INDUCTOR, CHIP 10uH
L2184	1-410-381-11	s	INDUCTOR, CHIP 10uH
L2185	1-410-381-11	s	INDUCTOR, CHIP 10uH
L2186	1-410-381-11	s	INDUCTOR, CHIP 10uH
L2187	1-410-381-11	s	INDUCTOR, CHIP 10uH
L2188	1-410-381-11	s	INDUCTOR, CHIP 10uH
L2189	1-410-381-11	s	INDUCTOR, CHIP 10uH
L2421	1-410-381-11	s	INDUCTOR, CHIP 10uH
L2422	1-410-381-11	s	INDUCTOR, CHIP 10uH
L3001	1-410-948-11	s	INDUCTOR 100uH
L3002	1-410-948-11	s	INDUCTOR 100uH
L3003	1-410-948-11	s	INDUCTOR 100uH
L3004	1-410-948-11	s	INDUCTOR 100uH
LV1	1-459-890-11	s	COIL, VARIABLE
LV21	1-459-890-11	s	COIL, VARIABLE
LV41	1-459-890-11	s	COIL, VARIABLE
LV81	1-459-889-11	s	COIL, VARIABLE
LV101	1-459-890-11	s	COIL, VARIABLE
Q1	8-729-120-28	s	TRANSISTOR 2SC1623-L5L6
Q2	8-729-120-28	s	TRANSISTOR 2SC1623-L5L6
Q17	8-729-216-22	s	TRANSISTOR 2SA1162
Q21	8-729-120-28	s	TRANSISTOR 2SC1623-L5L6
Q22	8-729-120-28	s	TRANSISTOR 2SC1623-L5L6
Q41	8-729-120-28	s	TRANSISTOR 2SC1623-L5L6
Q42	8-729-120-28	s	TRANSISTOR 2SC1623-L5L6
Q81	8-729-120-28	s	TRANSISTOR 2SC1623-L5L6
Q82	8-729-120-28	s	TRANSISTOR 2SC1623-L5L6
Q101	8-729-200-87	s	TRANSISTOR 2SC2714Y

(AA-90 BOARD)

Ref. No. or Q'ty	Part No.	SP	Description
Q102	8-729-200-87	s	TRANSISTOR 2SC2714Y
Q103	8-729-120-28	s	TRANSISTOR 2SC1623-L5L6
Q104	8-729-120-28	s	TRANSISTOR 2SC1623-L5L6
Q201	8-729-200-87	s	TRANSISTOR 2SC2714Y
Q202	8-729-200-87	s	TRANSISTOR 2SC2714Y
Q203	8-729-120-28	s	TRANSISTOR 2SC1623-L5L6
Q204	8-729-120-28	s	TRANSISTOR 2SC1623-L5L6
Q301	8-729-200-87	s	TRANSISTOR 2SC2714Y
Q302	8-729-200-87	s	TRANSISTOR 2SC2714Y
Q303	8-729-120-28	s	TRANSISTOR 2SC1623-L5L6
Q304	8-729-120-28	s	TRANSISTOR 2SC1623-L5L6
Q401	8-729-200-87	s	TRANSISTOR 2SC2714Y
Q402	8-729-200-87	s	TRANSISTOR 2SC2714Y
Q403	8-729-120-28	s	TRANSISTOR 2SC1623-L5L6
Q2000	8-729-109-44	s	TRANSISTOR 2SK94
Q2001	8-729-109-44	s	TRANSISTOR 2SK94
Q2002	8-729-109-44	s	TRANSISTOR 2SK94
Q2003	8-729-109-44	s	TRANSISTOR 2SK94
Q2004	8-729-120-28	s	TRANSISTOR 2SC1623-L5L6
Q2005	8-729-120-28	s	TRANSISTOR 2SC1623-L5L6
Q2006	8-729-120-28	s	TRANSISTOR 2SC1623-L5L6
Q2007	8-729-216-22	s	TRANSISTOR 2SA1162
Q2008	8-729-120-28	s	TRANSISTOR 2SC1623-L5L6
Q2211	8-729-216-22	s	TRANSISTOR 2SA1162
Q2212	8-729-120-28	s	TRANSISTOR 2SC1623-L5L6
Q2213	8-729-120-28	s	TRANSISTOR 2SC1623-L5L6
Q2241	8-729-216-22	s	TRANSISTOR 2SA1162
Q2242	8-729-120-28	s	TRANSISTOR 2SC1623-L5L6
Q2243	8-729-120-28	s	TRANSISTOR 2SC1623-L5L6
Q2271	8-729-216-22	s	TRANSISTOR 2SA1162
Q2272	8-729-120-28	s	TRANSISTOR 2SC1623-L5L6
Q2273	8-729-120-28	s	TRANSISTOR 2SC1623-L5L6
Q2421	8-729-216-22	s	TRANSISTOR 2SA1162
Q2422	8-729-120-28	s	TRANSISTOR 2SC1623-L5L6
Q2423	8-729-120-28	s	TRANSISTOR 2SC1623-L5L6
Q2424	8-729-216-22	s	TRANSISTOR 2SA1162
Q2425	8-729-120-28	s	TRANSISTOR 2SC1623-L5L6
Q2426	8-729-120-28	s	TRANSISTOR 2SC1623-L5L6
Q2521	8-729-216-22	s	TRANSISTOR 2SA1162
Q2522	8-729-120-28	s	TRANSISTOR 2SC1623-L5L6
Q2523	8-729-120-28	s	TRANSISTOR 2SC1623-L5L6
Q3001	8-729-101-07	s	TRANSISTOR 2SB798
Q3002	8-729-101-07	s	TRANSISTOR 2SB798
Q3003	8-729-807-51	s	TRANSISTOR 2SD1623-S
Q3004	8-729-807-51	s	TRANSISTOR 2SD1623-S
Q3005	8-729-216-22	s	TRANSISTOR 2SA1162
Q3006	8-729-216-22	s	TRANSISTOR 2SA1162
Q3007	8-729-216-22	s	TRANSISTOR 2SA1162
Q3008	8-729-216-22	s	TRANSISTOR 2SA1162
Q3009	8-729-216-22	s	TRANSISTOR 2SA1162
Q3010	8-729-216-22	s	TRANSISTOR 2SA1162
R1	1-208-782-11	s	METAL, CHIP 1K 0.50% 1/10W
R2	1-208-782-11	s	METAL, CHIP 1K 0.50% 1/10W
R3	1-208-790-11	s	METAL, CHIP 2.2K 0.50% 1/10W
R4	1-208-802-11	s	METAL, CHIP 6.8K 0.50% 1/10W
R5	1-208-812-11	s	METAL, CHIP 18K 0.50% 1/10W
R6	1-208-790-11	s	METAL, CHIP 2.2K 0.50% 1/10W
R7	1-208-782-11	s	METAL, CHIP 1K 0.50% 1/10W

(AA-90 BOARD)

Ref. No. or Q'ty	Part No.	SP	Description
R8	1-208-814-91	s	METAL, CHIP 22K 0.50% 1/10W
R9	1-208-802-11	s	METAL, CHIP 6.8K 0.50% 1/10W
R10	1-208-814-91	s	METAL, CHIP 22K 0.50% 1/10W
R11	1-208-822-11	s	METAL, CHIP 47K 0.50% 1/10W
R12	1-208-810-11	s	METAL, CHIP 15K 0.50% 1/10W
R13	1-208-822-11	s	METAL, CHIP 47K 0.50% 1/10W
R21	1-208-782-11	s	METAL, CHIP 1K 0.50% 1/10W
R22	1-208-782-11	s	METAL, CHIP 1K 0.50% 1/10W
R23	1-208-790-11	s	METAL, CHIP 2.2K 0.50% 1/10W
R24	1-208-802-11	s	METAL, CHIP 6.8K 0.50% 1/10W
R25	1-208-812-11	s	METAL, CHIP 18K 0.50% 1/10W
R26	1-208-806-11	s	METAL, CHIP 10K 0.50% 1/10W
R27	1-208-782-11	s	METAL, CHIP 1K 0.50% 1/10W
R28	1-208-814-91	s	METAL, CHIP 22K 0.50% 1/10W
R29	1-208-806-11	s	METAL, CHIP 10K 0.50% 1/10W
R30	1-208-814-91	s	METAL, CHIP 22K 0.50% 1/10W
R31	1-208-808-11	s	METAL, CHIP 12K 0.50% 1/10W
R32	1-208-830-11	s	METAL, CHIP 100K 0.50% 1/10W
R33	1-208-805-11	s	METAL, CHIP 9.1K 0.50% 1/10W
R34	1-208-787-11	s	METAL, CHIP 1.6K 0.50% 1/10W
R35	1-208-820-11	s	METAL, CHIP 39K 0.50% 1/10W
R41	1-208-782-11	s	METAL, CHIP 1K 0.50% 1/10W
R42	1-208-782-11	s	METAL, CHIP 1K 0.50% 1/10W
R43	1-208-790-11	s	METAL, CHIP 2.2K 0.50% 1/10W
R44	1-208-802-11	s	METAL, CHIP 6.8K 0.50% 1/10W
R45	1-208-812-11	s	METAL, CHIP 18K 0.50% 1/10W
R46	1-208-793-11	s	METAL, CHIP 3K 0.50% 1/10W
R47	1-208-782-11	s	METAL, CHIP 1K 0.50% 1/10W
R48	1-208-814-91	s	METAL, CHIP 22K 0.50% 1/10W
R49	1-208-802-11	s	METAL, CHIP 6.8K 0.50% 1/10W
R50	1-208-814-91	s	METAL, CHIP 22K 0.50% 1/10W
R51	1-208-806-11	s	METAL, CHIP 10K 0.50% 1/10W
R52	1-208-808-11	s	METAL, CHIP 12K 0.50% 1/10W
R53	1-208-830-11	s	METAL, CHIP 100K 0.50% 1/10W
R54	1-208-805-11	s	METAL, CHIP 9.1K 0.50% 1/10W
R55	1-208-800-11	s	METAL, CHIP 5.6K 0.50% 1/10W
R81	1-208-782-11	s	METAL, CHIP 1K 0.50% 1/10W
R82	1-208-782-11	s	METAL, CHIP 1K 0.50% 1/10W
R83	1-208-790-11	s	METAL, CHIP 2.2K 0.50% 1/10W
R84	1-208-802-11	s	METAL, CHIP 6.8K 0.50% 1/10W
R85	1-208-812-11	s	METAL, CHIP 18K 0.50% 1/10W
R86	1-208-791-11	s	METAL, CHIP 2.4K 0.50% 1/10W
R87	1-208-782-11	s	METAL, CHIP 1K 0.50% 1/10W
R88	1-208-814-91	s	METAL, CHIP 22K 0.50% 1/10W
R89	1-208-802-11	s	METAL, CHIP 6.8K 0.50% 1/10W
R90	1-208-814-91	s	METAL, CHIP 22K 0.50% 1/10W
R91	1-208-806-11	s	METAL, CHIP 10K 0.50% 1/10W
R92	1-208-808-11	s	METAL, CHIP 12K 0.50% 1/10W
R93	1-208-830-11	s	METAL, CHIP 100K 0.50% 1/10W
R94	1-208-805-11	s	METAL, CHIP 9.1K 0.50% 1/10W
R95	1-208-800-11	s	METAL, CHIP 5.6K 0.50% 1/10W
R101	1-208-777-11	s	METAL, CHIP 620 0.50% 1/10W
R102	1-208-777-11	s	METAL, CHIP 620 0.50% 1/10W
R103	1-208-794-11	s	METAL, CHIP 3.3K 0.50% 1/10W
R104	1-208-798-11	s	METAL, CHIP 4.7K 0.50% 1/10W
R105	1-208-802-11	s	METAL, CHIP 6.8K 0.50% 1/10W
R106	1-208-777-11	s	METAL, CHIP 620 0.50% 1/10W
R107	1-208-796-11	s	METAL, CHIP 3.9K 0.50% 1/10W
R108	1-208-777-11	s	METAL, CHIP 620 0.50% 1/10W

(AA-90 BOARD)

Ref. No. or Q'ty	Part No.	SP	Description
R109	1-208-784-11	s	METAL, CHIP 1.2K 0.50% 1/10W
R111	1-208-806-11	s	METAL, CHIP 10K 0.50% 1/10W
R112	1-208-798-11	s	METAL, CHIP 4.7K 0.50% 1/10W
R113	1-208-810-11	s	METAL, CHIP 15K 0.50% 1/10W
R114	1-208-788-11	s	METAL, CHIP 1.8K 0.50% 1/10W
R115	1-208-808-11	s	METAL, CHIP 12K 0.50% 1/10W
R116	1-208-788-11	s	METAL, CHIP 1.8K 0.50% 1/10W
R117	1-208-799-11	s	METAL, CHIP 5.1K 0.50% 1/10W
R118	1-208-799-11	s	METAL, CHIP 5.1K 0.50% 1/10W
R119	1-208-798-11	s	METAL, CHIP 4.7K 0.50% 1/10W
R120	1-208-782-11	s	METAL, CHIP 1K 0.50% 1/10W
R121	1-208-806-11	s	METAL, CHIP 10K 0.50% 1/10W
R122	1-208-806-11	s	METAL, CHIP 10K 0.50% 1/10W
R123	1-208-814-91	s	METAL, CHIP 22K 0.50% 1/10W
R124	1-208-806-11	s	METAL, CHIP 10K 0.50% 1/10W
R125	1-208-782-11	s	METAL, CHIP 1K 0.50% 1/10W
R126	1-208-814-91	s	METAL, CHIP 22K 0.50% 1/10W
R129	1-208-830-11	s	METAL, CHIP 100K 0.50% 1/10W
R130	1-208-806-11	s	METAL, CHIP 10K 0.50% 1/10W
R131	1-218-761-11	s	METAL, CHIP 240K 0.50% 1/10W
R132	1-208-827-11	s	METAL, CHIP 75K 0.50% 1/10W
R133	1-208-827-11	s	METAL, CHIP 75K 0.50% 1/10W
R134	1-208-827-11	s	METAL, CHIP 75K 0.50% 1/10W
R135	1-208-758-11	s	METAL, CHIP 100 0.50% 1/10W
R136	1-208-850-11	s	METAL, CHIP 680K 0.50% 1/10W
R137	1-208-830-11	s	METAL, CHIP 100K 0.50% 1/10W
R138	1-208-814-91	s	METAL, CHIP 22K 0.50% 1/10W
R139	1-208-814-91	s	METAL, CHIP 22K 0.50% 1/10W
R140	1-208-806-11	s	METAL, CHIP 10K 0.50% 1/10W
R141	1-208-846-11	s	METAL, CHIP 470K 0.50% 1/10W
R142	1-216-001-00	s	METAL, CHIP 10 5% 1/10W
R143	1-208-782-11	s	METAL, CHIP 1K 0.50% 1/10W
R144	1-208-822-11	s	METAL, CHIP 47K 0.50% 1/10W
R145	1-208-806-11	s	METAL, CHIP 10K 0.50% 1/10W
R201	1-208-774-11	s	METAL, CHIP 470 0.50% 1/10W
R202	1-208-774-11	s	METAL, CHIP 470 0.50% 1/10W
R203	1-208-794-11	s	METAL, CHIP 3.3K 0.50% 1/10W
R204	1-208-798-11	s	METAL, CHIP 4.7K 0.50% 1/10W
R205	1-208-802-11	s	METAL, CHIP 6.8K 0.50% 1/10W
R206	1-208-774-11	s	METAL, CHIP 470 0.50% 1/10W
R207	1-208-796-11	s	METAL, CHIP 3.9K 0.50% 1/10W
R208	1-208-774-11	s	METAL, CHIP 470 0.50% 1/10W
R209	1-208-800-11	s	METAL, CHIP 5.6K 0.50% 1/10W
R210	1-208-800-11	s	METAL, CHIP 5.6K 0.50% 1/10W
R211	1-208-816-11	s	METAL, CHIP 27K 0.50% 1/10W
R212	1-208-826-11	s	METAL, CHIP 68K 0.50% 1/10W
R213	1-208-806-11	s	METAL, CHIP 10K 0.50% 1/10W
R214	1-208-798-11	s	METAL, CHIP 4.7K 0.50% 1/10W
R215	1-208-792-11	s	METAL, CHIP 2.7K 0.50% 1/10W
R216	1-208-822-11	s	METAL, CHIP 47K 0.50% 1/10W
R217	1-208-836-11	s	METAL, CHIP 180K 0.50% 1/10W
R218	1-208-803-11	s	METAL, CHIP 7.5K 0.50% 1/10W
R219	1-208-803-11	s	METAL, CHIP 7.5K 0.50% 1/10W
R220	1-208-806-11	s	METAL, CHIP 10K 0.50% 1/10W
R221	1-208-806-11	s	METAL, CHIP 10K 0.50% 1/10W
R222	1-208-809-11	s	METAL, CHIP 13K 0.50% 1/10W
R223	1-208-832-11	s	METAL, CHIP 120K 0.50% 1/10W
R224	1-208-814-91	s	METAL, CHIP 22K 0.50% 1/10W
R225	1-216-603-11	s	METAL, CHIP 10 0.50% 1/10W

(AA-90 BOARD)

Ref. No. or Q'ty	Part No.	SP	Description
R226	1-208-814-91	s	METAL, CHIP 22K 0.50% 1/10W
R227	1-216-603-11	s	METAL, CHIP 10 0.50% 1/10W
R228	1-208-758-11	s	METAL, CHIP 100 0.50% 1/10W
R229	1-208-758-11	s	METAL, CHIP 100 0.50% 1/10W
R230	1-208-830-11	s	METAL, CHIP 100K 0.50% 1/10W
R231	1-208-830-11	s	METAL, CHIP 100K 0.50% 1/10W
R301	1-208-774-11	s	METAL, CHIP 470 0.50% 1/10W
R302	1-208-774-11	s	METAL, CHIP 470 0.50% 1/10W
R303	1-208-794-11	s	METAL, CHIP 3.3K 0.50% 1/10W
R304	1-208-798-11	s	METAL, CHIP 4.7K 0.50% 1/10W
R305	1-208-802-11	s	METAL, CHIP 6.8K 0.50% 1/10W
R306	1-208-774-11	s	METAL, CHIP 470 0.50% 1/10W
R307	1-208-796-11	s	METAL, CHIP 3.9K 0.50% 1/10W
R308	1-208-774-11	s	METAL, CHIP 470 0.50% 1/10W
R309	1-208-799-11	s	METAL, CHIP 5.1K 0.50% 1/10W
R310	1-208-800-11	s	METAL, CHIP 5.6K 0.50% 1/10W
R311	1-208-816-11	s	METAL, CHIP 27K 0.50% 1/10W
R312	1-208-826-11	s	METAL, CHIP 68K 0.50% 1/10W
R313	1-208-806-11	s	METAL, CHIP 10K 0.50% 1/10W
R314	1-208-797-11	s	METAL, CHIP 4.3K 0.50% 1/10W
R315	1-208-792-11	s	METAL, CHIP 2.7K 0.50% 1/10W
R316	1-208-822-11	s	METAL, CHIP 47K 0.50% 1/10W
R317	1-208-836-11	s	METAL, CHIP 180K 0.50% 1/10W
R318	1-208-803-11	s	METAL, CHIP 7.5K 0.50% 1/10W
R319	1-208-803-11	s	METAL, CHIP 7.5K 0.50% 1/10W
R320	1-208-806-11	s	METAL, CHIP 10K 0.50% 1/10W
R321	1-208-806-11	s	METAL, CHIP 10K 0.50% 1/10W
R322	1-208-809-11	s	METAL, CHIP 13K 0.50% 1/10W
R323	1-208-832-11	s	METAL, CHIP 120K 0.50% 1/10W
R324	1-208-814-91	s	METAL, CHIP 22K 0.50% 1/10W
R325	1-216-603-11	s	METAL, CHIP 10 0.50% 1/10W
R326	1-208-814-91	s	METAL, CHIP 22K 0.50% 1/10W
R327	1-216-603-11	s	METAL, CHIP 10 0.50% 1/10W
R328	1-208-758-11	s	METAL, CHIP 100 0.50% 1/10W
R329	1-208-758-11	s	METAL, CHIP 100 0.50% 1/10W
R330	1-208-830-11	s	METAL, CHIP 100K 0.50% 1/10W
R331	1-208-830-11	s	METAL, CHIP 100K 0.50% 1/10W
R401	1-208-774-11	s	METAL, CHIP 470 0.50% 1/10W
R402	1-208-774-11	s	METAL, CHIP 470 0.50% 1/10W
R403	1-208-794-11	s	METAL, CHIP 3.3K 0.50% 1/10W
R404	1-208-798-11	s	METAL, CHIP 4.7K 0.50% 1/10W
R405	1-208-802-11	s	METAL, CHIP 6.8K 0.50% 1/10W
R406	1-208-774-11	s	METAL, CHIP 470 0.50% 1/10W
R407	1-208-796-11	s	METAL, CHIP 3.9K 0.50% 1/10W
R408	1-208-774-11	s	METAL, CHIP 470 0.50% 1/10W
R409	1-208-796-11	s	METAL, CHIP 3.9K 0.50% 1/10W
R410	1-208-802-11	s	METAL, CHIP 6.8K 0.50% 1/10W
R411	1-208-816-11	s	METAL, CHIP 27K 0.50% 1/10W
R412	1-208-826-11	s	METAL, CHIP 68K 0.50% 1/10W
R413	1-208-806-11	s	METAL, CHIP 10K 0.50% 1/10W
R414	1-208-794-11	s	METAL, CHIP 3.3K 0.50% 1/10W
R415	1-208-792-11	s	METAL, CHIP 2.7K 0.50% 1/10W
R416	1-208-816-11	s	METAL, CHIP 27K 0.50% 1/10W
R417	1-208-813-11	s	METAL, CHIP 20K 0.50% 1/10W
R418	1-208-813-11	s	METAL, CHIP 20K 0.50% 1/10W
R419	1-208-826-11	s	METAL, CHIP 68K 0.50% 1/10W
R420	1-208-802-11	s	METAL, CHIP 6.8K 0.50% 1/10W
R421	1-208-808-11	s	METAL, CHIP 12K 0.50% 1/10W
R601	1-247-804-11	s	CARBON 75 5% 1/4W

(AA-90 BOARD)

Ref. No. or Q'ty	Part No.	SP	Description
R602	1-208-758-11	s	METAL, CHIP 100 0.50% 1/10W
R603	1-208-758-11	s	METAL, CHIP 100 0.50% 1/10W
R604	1-208-830-11	s	METAL, CHIP 100K 0.50% 1/10W
R605	1-208-789-11	s	METAL, CHIP 2K 0.50% 1/10W
R2000	1-216-025-11	s	METAL, CHIP 100 5% 1/10W
R2082	1-216-073-00	s	METAL, CHIP 10K 5% 1/10W
R2083	1-208-836-11	s	METAL, CHIP 180K 0.50% 1/10W
R2084	1-208-813-11	s	METAL, CHIP 20K 0.50% 1/10W
R2085	1-208-813-11	s	METAL, CHIP 20K 0.50% 1/10W
R2086	1-208-836-11	s	METAL, CHIP 180K 0.50% 1/10W
R2087	1-208-805-11	s	METAL, CHIP 9.1K 0.50% 1/10W
R2088	1-216-073-00	s	METAL, CHIP 10K 5% 1/10W
R2089	1-208-812-11	s	METAL, CHIP 18K 0.50% 1/10W
R2091	1-208-814-91	s	METAL, CHIP 22K 0.50% 1/10W
R2092	1-208-814-91	s	METAL, CHIP 22K 0.50% 1/10W
R2093	1-208-814-91	s	METAL, CHIP 22K 0.50% 1/10W
R2100	1-216-001-00	s	METAL, CHIP 10 5% 1/10W
R2101	1-216-001-00	s	METAL, CHIP 10 5% 1/10W
R2181	1-216-081-00	s	METAL, CHIP 22K 5% 1/10W
R2182	1-216-025-11	s	METAL, CHIP 100 5% 1/10W
R2183	1-216-081-00	s	METAL, CHIP 22K 5% 1/10W
R2184	1-216-081-00	s	METAL, CHIP 22K 5% 1/10W
R2185	1-216-081-00	s	METAL, CHIP 22K 5% 1/10W
R2186	1-216-073-00	s	METAL, CHIP 10K 5% 1/10W
R2187	1-216-073-00	s	METAL, CHIP 10K 5% 1/10W
R2189	1-208-830-11	s	METAL, CHIP 100K 0.50% 1/10W
R2190	1-216-089-91	s	METAL, CHIP 47k 5% 1/10W
R2191	1-216-089-91	s	METAL, CHIP 47k 5% 1/10W
R2192	1-216-081-00	s	METAL, CHIP 22K 5% 1/10W
R2193	1-208-818-11	s	METAL, CHIP 33K 0.50% 1/10W
R2194	1-208-830-11	s	METAL, CHIP 100K 0.50% 1/10W
R2211	1-216-073-00	s	METAL, CHIP 10K 5% 1/10W
R2212	1-216-025-11	s	METAL, CHIP 100 5% 1/10W
R2213	1-208-830-11	s	METAL, CHIP 100K 0.50% 1/10W
R2214	1-208-830-11	s	METAL, CHIP 100K 0.50% 1/10W
R2215	1-216-073-00	s	METAL, CHIP 10K 5% 1/10W
R2216	1-208-782-11	s	METAL, CHIP 1K 0.50% 1/10W
R2217	1-208-806-11	s	METAL, CHIP 10K 0.50% 1/10W
R2218	1-216-081-00	s	METAL, CHIP 22K 5% 1/10W
R2219	1-216-081-00	s	METAL, CHIP 22K 5% 1/10W
R2220	1-216-081-00	s	METAL, CHIP 22K 5% 1/10W
R2221	1-216-081-00	s	METAL, CHIP 22K 5% 1/10W
R2222	1-211-963-11	s	METAL, CHIP 30 0.50% 1/10W
R2223	1-216-097-00	s	METAL, CHIP 100K 5% 1/10W
R2224	1-216-121-91	s	METAL, CHIP 1M 5% 1/10W
R2225	1-216-121-91	s	METAL, CHIP 1M 5% 1/10W
R2227	1-208-784-11	s	METAL, CHIP 1.2K 0.50% 1/10W
R2228	1-216-073-00	s	METAL, CHIP 10K 5% 1/10W
R2229	1-216-065-00	s	METAL, CHIP 4.7K 5% 1/10W
R2230	1-208-814-91	s	METAL, CHIP 22K 0.50% 1/10W
R2231	1-216-073-00	s	METAL, CHIP 10K 5% 1/10W
R2232	1-216-065-00	s	METAL, CHIP 4.7K 5% 1/10W
R2233	1-216-081-00	s	METAL, CHIP 22K 5% 1/10W
R2234	1-216-081-00	s	METAL, CHIP 22K 5% 1/10W
R2235	1-216-073-00	s	METAL, CHIP 10K 5% 1/10W
R2236	1-216-065-00	s	METAL, CHIP 4.7K 5% 1/10W
R2237	1-208-814-91	s	METAL, CHIP 22K 0.50% 1/10W
R2238	1-216-073-00	s	METAL, CHIP 10K 5% 1/10W
R2239	1-216-065-00	s	METAL, CHIP 4.7K 5% 1/10W

(AA-90 BOARD)

Ref. No. or Q'ty	Part No.	SP	Description
R2242	1-216-025-11	s	METAL, CHIP 100 5% 1/10W
R2243	1-208-830-11	s	METAL, CHIP 100K 0.50% 1/10W
R2244	1-208-830-11	s	METAL, CHIP 100K 0.50% 1/10W
R2245	1-208-814-91	s	METAL, CHIP 22K 0.50% 1/10W
R2246	1-208-814-91	s	METAL, CHIP 22K 0.50% 1/10W
R2247	1-208-814-91	s	METAL, CHIP 22K 0.50% 1/10W
R2248	1-208-814-91	s	METAL, CHIP 22K 0.50% 1/10W
R2249	1-208-814-91	s	METAL, CHIP 22K 0.50% 1/10W
R2250	1-208-814-91	s	METAL, CHIP 22K 0.50% 1/10W
R2251	1-208-814-91	s	METAL, CHIP 22K 0.50% 1/10W
R2252	1-208-765-11	s	METAL, CHIP 200 0.50% 1/10W
R2254	1-216-097-00	s	METAL, CHIP 100K 5% 1/10W
R2265	1-208-784-11	s	METAL, CHIP 1.2K 0.50% 1/10W
R2266	1-208-818-11	s	METAL, CHIP 33K 0.50% 1/10W
R2267	1-216-089-91	s	METAL, CHIP 47k 5% 1/10W
R2268	1-208-818-11	s	METAL, CHIP 33K 0.50% 1/10W
R2269	1-216-089-91	s	METAL, CHIP 47k 5% 1/10W
R2270	1-216-089-91	s	METAL, CHIP 47k 5% 1/10W
R2271	1-208-813-11	s	METAL, CHIP 20K 0.50% 1/10W
R2272	1-216-097-00	s	METAL, CHIP 100K 5% 1/10W
R2273	1-216-025-11	s	METAL, CHIP 100 5% 1/10W
R2274	1-208-822-11	s	METAL, CHIP 47K 0.50% 1/10W
R2275	1-208-822-11	s	METAL, CHIP 47K 0.50% 1/10W
R2276	1-216-025-11	s	METAL, CHIP 100 5% 1/10W
R2277	1-216-025-11	s	METAL, CHIP 100 5% 1/10W
R2278	1-216-025-11	s	METAL, CHIP 100 5% 1/10W
R2279	1-216-073-00	s	METAL, CHIP 10K 5% 1/10W
R2280	1-216-073-00	s	METAL, CHIP 10K 5% 1/10W
R2491	1-216-081-00	s	METAL, CHIP 22K 5% 1/10W
R2492	1-216-025-11	s	METAL, CHIP 100 5% 1/10W
R2493	1-216-081-00	s	METAL, CHIP 22K 5% 1/10W
R2494	1-216-081-00	s	METAL, CHIP 22K 5% 1/10W
R2495	1-216-081-00	s	METAL, CHIP 22K 5% 1/10W
R2496	1-216-073-00	s	METAL, CHIP 10K 5% 1/10W
R2497	1-208-830-11	s	METAL, CHIP 100K 0.50% 1/10W
R2498	1-208-830-11	s	METAL, CHIP 100K 0.50% 1/10W
R2499	1-216-073-00	s	METAL, CHIP 10K 5% 1/10W
R2500	1-216-089-91	s	METAL, CHIP 47k 5% 1/10W
R2501	1-216-089-91	s	METAL, CHIP 47k 5% 1/10W
R2502	1-216-081-00	s	METAL, CHIP 22K 5% 1/10W
R2523	1-216-073-00	s	METAL, CHIP 10K 5% 1/10W
R2524	1-216-025-11	s	METAL, CHIP 100 5% 1/10W
R2525	1-208-830-11	s	METAL, CHIP 100K 0.50% 1/10W
R2526	1-208-830-11	s	METAL, CHIP 100K 0.50% 1/10W
R2527	1-216-073-00	s	METAL, CHIP 10K 5% 1/10W
R2528	1-208-782-11	s	METAL, CHIP 1K 0.50% 1/10W
R2529	1-208-806-11	s	METAL, CHIP 10K 0.50% 1/10W
R2530	1-216-081-00	s	METAL, CHIP 22K 5% 1/10W
R2531	1-216-081-00	s	METAL, CHIP 22K 5% 1/10W
R2532	1-216-081-00	s	METAL, CHIP 22K 5% 1/10W
R2533	1-216-081-00	s	METAL, CHIP 22K 5% 1/10W
R2534	1-211-963-11	s	METAL, CHIP 30 0.50% 1/10W
R2535	1-216-097-00	s	METAL, CHIP 100K 5% 1/10W
R2536	1-216-121-91	s	METAL, CHIP 1M 5% 1/10W
R2537	1-216-121-91	s	METAL, CHIP 1M 5% 1/10W
R2539	1-208-784-11	s	METAL, CHIP 1.2K 0.50% 1/10W
R2540	1-216-081-00	s	METAL, CHIP 22K 5% 1/10W
R2542	1-216-025-11	s	METAL, CHIP 100 5% 1/10W
R2543	1-208-830-11	s	METAL, CHIP 100K 0.50% 1/10W

(AA-90 BOARD)

Ref. No. or Q'ty	Part No.	SP	Description
R2544	1-208-830-11	s	METAL, CHIP 100K 0.50% 1/10W
R2547	1-208-814-91	s	METAL, CHIP 22K 0.50% 1/10W
R2548	1-208-814-91	s	METAL, CHIP 22K 0.50% 1/10W
R2549	1-208-814-91	s	METAL, CHIP 22K 0.50% 1/10W
R2551	1-208-814-91	s	METAL, CHIP 22K 0.50% 1/10W
R2552	1-208-814-91	s	METAL, CHIP 22K 0.50% 1/10W
R2553	1-208-814-91	s	METAL, CHIP 22K 0.50% 1/10W
R2554	1-208-814-91	s	METAL, CHIP 22K 0.50% 1/10W
R2557	1-208-765-11	s	METAL, CHIP 200 0.50% 1/10W
R2559	1-216-097-00	s	METAL, CHIP 100K 5% 1/10W
R2560	1-216-073-00	s	METAL, CHIP 10K 5% 1/10W
R2561	1-216-065-00	s	METAL, CHIP 4.7K 5% 1/10W
R2562	1-208-814-91	s	METAL, CHIP 22K 0.50% 1/10W
R2563	1-216-073-00	s	METAL, CHIP 10K 5% 1/10W
R2564	1-216-065-00	s	METAL, CHIP 4.7K 5% 1/10W
R2581	1-208-813-11	s	METAL, CHIP 20K 0.50% 1/10W
R2582	1-216-097-00	s	METAL, CHIP 100K 5% 1/10W
R2583	1-216-025-11	s	METAL, CHIP 100 5% 1/10W
R2584	1-208-822-11	s	METAL, CHIP 47K 0.50% 1/10W
R2585	1-208-822-11	s	METAL, CHIP 47K 0.50% 1/10W
R2586	1-216-025-11	s	METAL, CHIP 100 5% 1/10W
R2587	1-216-025-11	s	METAL, CHIP 100 5% 1/10W
R2588	1-216-025-11	s	METAL, CHIP 100 5% 1/10W
R2589	1-216-073-00	s	METAL, CHIP 10K 5% 1/10W
R2590	1-216-073-00	s	METAL, CHIP 10K 5% 1/10W
R2591	1-216-073-00	s	METAL, CHIP 10K 5% 1/10W
R2592	1-216-065-00	s	METAL, CHIP 4.7K 5% 1/10W
R2593	1-208-814-91	s	METAL, CHIP 22K 0.50% 1/10W
R2594	1-216-073-00	s	METAL, CHIP 10K 5% 1/10W
R2595	1-216-065-00	s	METAL, CHIP 4.7K 5% 1/10W
R2596	1-216-073-00	s	METAL, CHIP 10K 5% 1/10W
R2597	1-216-065-00	s	METAL, CHIP 4.7K 5% 1/10W
R2598	1-208-814-91	s	METAL, CHIP 22K 0.50% 1/10W
R2599	1-216-073-00	s	METAL, CHIP 10K 5% 1/10W
R2600	1-216-065-00	s	METAL, CHIP 4.7K 5% 1/10W
R2601	1-216-081-00	s	METAL, CHIP 22K 5% 1/10W
R2602	1-208-817-11	s	METAL, CHIP 30K 0.50% 1/10W
R2603	1-208-810-11	s	METAL, CHIP 15K 0.50% 1/10W
R2604	1-216-025-11	s	METAL, CHIP 100 5% 1/10W
R2605	1-208-830-11	s	METAL, CHIP 100K 0.50% 1/10W
R2606	1-208-810-11	s	METAL, CHIP 15K 0.50% 1/10W
R2607	1-208-817-11	s	METAL, CHIP 30K 0.50% 1/10W
R2608	1-208-817-11	s	METAL, CHIP 30K 0.50% 1/10W
R2609	1-208-810-11	s	METAL, CHIP 15K 0.50% 1/10W
R2610	1-216-025-11	s	METAL, CHIP 100 5% 1/10W
R2611	1-208-830-11	s	METAL, CHIP 100K 0.50% 1/10W
R2612	1-208-810-11	s	METAL, CHIP 15K 0.50% 1/10W
R2613	1-208-817-11	s	METAL, CHIP 30K 0.50% 1/10W
R2614	1-216-089-91	s	METAL, CHIP 47k 5% 1/10W
R2615	1-216-089-91	s	METAL, CHIP 47k 5% 1/10W
R2616	1-216-089-91	s	METAL, CHIP 47k 5% 1/10W
R2661	1-216-073-00	s	METAL, CHIP 10K 5% 1/10W
R2662	1-216-065-00	s	METAL, CHIP 4.7K 5% 1/10W
R2663	1-208-814-91	s	METAL, CHIP 22K 0.50% 1/10W
R2664	1-216-073-00	s	METAL, CHIP 10K 5% 1/10W
R2665	1-216-065-00	s	METAL, CHIP 4.7K 5% 1/10W
R2666	1-208-818-11	s	METAL, CHIP 33K 0.50% 1/10W
R2667	1-208-784-11	s	METAL, CHIP 1.2K 0.50% 1/10W
R2668	1-208-818-11	s	METAL, CHIP 33K 0.50% 1/10W

(AA-90 BOARD)

Ref. No. or Q'ty	Part No.	SP	Description
R2670	1-208-818-11	s	METAL, CHIP 33K 0.50% 1/10W
R2700	1-208-814-91	s	METAL, CHIP 22K 0.50% 1/10W
R2701	1-208-814-91	s	METAL, CHIP 22K 0.50% 1/10W
R2702	1-216-025-11	s	METAL, CHIP 100 5% 1/10W
R2703	1-208-806-11	s	METAL, CHIP 10K 0.50% 1/10W
R2704	1-208-806-11	s	METAL, CHIP 10K 0.50% 1/10W
R2705	1-208-806-11	s	METAL, CHIP 10K 0.50% 1/10W
R2706	1-216-025-11	s	METAL, CHIP 100 5% 1/10W
R2707	1-208-814-91	s	METAL, CHIP 22K 0.50% 1/10W
R2708	1-208-814-91	s	METAL, CHIP 22K 0.50% 1/10W
R2709	1-216-025-11	s	METAL, CHIP 100 5% 1/10W
R2710	1-208-806-11	s	METAL, CHIP 10K 0.50% 1/10W
R2711	1-208-806-11	s	METAL, CHIP 10K 0.50% 1/10W
R2712	1-208-806-11	s	METAL, CHIP 10K 0.50% 1/10W
R2713	1-216-025-11	s	METAL, CHIP 100 5% 1/10W
R2714	1-208-814-91	s	METAL, CHIP 22K 0.50% 1/10W
R2715	1-216-025-11	s	METAL, CHIP 100 5% 1/10W
R2716	1-208-814-91	s	METAL, CHIP 22K 0.50% 1/10W
R2717	1-208-814-91	s	METAL, CHIP 22K 0.50% 1/10W
R2718	1-208-814-91	s	METAL, CHIP 22K 0.50% 1/10W
R2719	1-208-814-91	s	METAL, CHIP 22K 0.50% 1/10W
R2720	1-208-814-91	s	METAL, CHIP 22K 0.50% 1/10W
R2721	1-208-814-91	s	METAL, CHIP 22K 0.50% 1/10W
R2722	1-208-814-91	s	METAL, CHIP 22K 0.50% 1/10W
R2723	1-208-814-91	s	METAL, CHIP 22K 0.50% 1/10W
R2724	1-208-814-91	s	METAL, CHIP 22K 0.50% 1/10W
R2725	1-216-025-11	s	METAL, CHIP 100 5% 1/10W
R2726	1-216-025-11	s	METAL, CHIP 100 5% 1/10W
R2727	1-208-806-11	s	METAL, CHIP 10K 0.50% 1/10W
R2728	1-208-806-11	s	METAL, CHIP 10K 0.50% 1/10W
R2729	1-208-806-11	s	METAL, CHIP 10K 0.50% 1/10W
R2730	1-208-806-11	s	METAL, CHIP 10K 0.50% 1/10W
R2731	1-208-814-91	s	METAL, CHIP 22K 0.50% 1/10W
R2732	1-208-814-91	s	METAL, CHIP 22K 0.50% 1/10W
R2733	1-216-025-11	s	METAL, CHIP 100 5% 1/10W
R2734	1-208-814-91	s	METAL, CHIP 22K 0.50% 1/10W
R2735	1-208-814-91	s	METAL, CHIP 22K 0.50% 1/10W
R2736	1-216-025-11	s	METAL, CHIP 100 5% 1/10W
R2737	1-208-814-91	s	METAL, CHIP 22K 0.50% 1/10W
R2738	1-216-025-11	s	METAL, CHIP 100 5% 1/10W
R2739	1-208-814-91	s	METAL, CHIP 22K 0.50% 1/10W
R2740	1-216-097-00	s	METAL, CHIP 100K 5% 1/10W
R2741	1-208-806-11	s	METAL, CHIP 10K 0.50% 1/10W
R2742	1-208-806-11	s	METAL, CHIP 10K 0.50% 1/10W
R2743	1-208-806-11	s	METAL, CHIP 10K 0.50% 1/10W
R2744	1-208-806-11	s	METAL, CHIP 10K 0.50% 1/10W
R2745	1-216-025-11	s	METAL, CHIP 100 5% 1/10W
R2746	1-208-806-11	s	METAL, CHIP 10K 0.50% 1/10W
R2747	1-216-025-11	s	METAL, CHIP 100 5% 1/10W
R2748	1-216-073-00	s	METAL, CHIP 10K 5% 1/10W
R2749	1-216-025-11	s	METAL, CHIP 100 5% 1/10W
R2750	1-216-001-00	s	METAL, CHIP 10 5% 1/10W
R2751	1-208-814-91	s	METAL, CHIP 22K 0.50% 1/10W
R2752	1-216-001-00	s	METAL, CHIP 10 5% 1/10W
R2753	1-216-073-00	s	METAL, CHIP 10K 5% 1/10W
R2754	1-216-025-11	s	METAL, CHIP 100 5% 1/10W
R2755	1-216-001-00	s	METAL, CHIP 10 5% 1/10W
R2756	1-208-814-91	s	METAL, CHIP 22K 0.50% 1/10W
R2757	1-216-001-00	s	METAL, CHIP 10 5% 1/10W

(AA-90 BOARD)

Ref. No. or Q'ty	Part No.	SP	Description
R2761	1-216-025-11	s	METAL, CHIP 100 5% 1/10W
R2762	1-216-025-11	s	METAL, CHIP 100 5% 1/10W
R2764	1-216-133-00	s	METAL, CHIP 3.3M 5% 1/10W
R2765	1-216-133-00	s	METAL, CHIP 3.3M 5% 1/10W
R2766	1-216-133-00	s	METAL, CHIP 3.3M 5% 1/10W
R2767	1-216-133-00	s	METAL, CHIP 3.3M 5% 1/10W
R2768	1-216-089-91	s	METAL, CHIP 47k 5% 1/10W
R2769	1-208-765-11	s	METAL, CHIP 200 0.50% 1/10W
R2770	1-208-765-11	s	METAL, CHIP 200 0.50% 1/10W
R2771	1-208-806-11	s	METAL, CHIP 10K 0.50% 1/10W
R2772	1-208-806-11	s	METAL, CHIP 10K 0.50% 1/10W
R2773	1-208-814-91	s	METAL, CHIP 22K 0.50% 1/10W
R2774	1-208-765-11	s	METAL, CHIP 200 0.50% 1/10W
R2775	1-208-765-11	s	METAL, CHIP 200 0.50% 1/10W
R2776	1-208-814-91	s	METAL, CHIP 22K 0.50% 1/10W
R2777	1-208-765-11	s	METAL, CHIP 200 0.50% 1/10W
R2778	1-208-765-11	s	METAL, CHIP 200 0.50% 1/10W
R2779	1-208-814-91	s	METAL, CHIP 22K 0.50% 1/10W
R2780	1-216-655-11	s	METAL, CHIP 1.5K 0.50% 1/10W
R2781	1-216-655-11	s	METAL, CHIP 1.5K 0.50% 1/10W
R2782	1-216-089-91	s	METAL, CHIP 47k 5% 1/10W
R2783	1-216-097-00	s	METAL, CHIP 100K 5% 1/10W
R2784	1-216-089-91	s	METAL, CHIP 47k 5% 1/10W
R2785	1-216-089-91	s	METAL, CHIP 47k 5% 1/10W
R2786	1-216-073-00	s	METAL, CHIP 10K 5% 1/10W
R2787	1-216-073-00	s	METAL, CHIP 10K 5% 1/10W
R2788	1-216-073-00	s	METAL, CHIP 10K 5% 1/10W
R2789	1-216-073-00	s	METAL, CHIP 10K 5% 1/10W
R2790	1-216-089-91	s	METAL, CHIP 47k 5% 1/10W
R2791	1-216-097-00	s	METAL, CHIP 100K 5% 1/10W
R3001	1-208-799-11	s	METAL, CHIP 5.1K 0.50% 1/10W
R3002	1-208-787-11	s	METAL, CHIP 1.6K 0.50% 1/10W
R3003	1-208-814-91	s	METAL, CHIP 22K 0.50% 1/10W
R3004	1-208-814-91	s	METAL, CHIP 22K 0.50% 1/10W
R3005	1-208-806-11	s	METAL, CHIP 10K 0.50% 1/10W
R3006	1-208-814-91	s	METAL, CHIP 22K 0.50% 1/10W
R3007	1-208-814-91	s	METAL, CHIP 22K 0.50% 1/10W
R3008	1-208-822-11	s	METAL, CHIP 47K 0.50% 1/10W
R3009	1-208-818-11	s	METAL, CHIP 33K 0.50% 1/10W
R3010	1-208-830-11	s	METAL, CHIP 100K 0.50% 1/10W
R3011	1-208-799-11	s	METAL, CHIP 5.1K 0.50% 1/10W
R3012	1-208-787-11	s	METAL, CHIP 1.6K 0.50% 1/10W
R3013	1-208-822-11	s	METAL, CHIP 47K 0.50% 1/10W
R3014	1-208-822-11	s	METAL, CHIP 47K 0.50% 1/10W
R3015	1-208-830-11	s	METAL, CHIP 100K 0.50% 1/10W
R3016	1-208-830-11	s	METAL, CHIP 100K 0.50% 1/10W
R3017	1-216-097-00	s	METAL, CHIP 100K 5% 1/10W
R3018	1-216-097-00	s	METAL, CHIP 100K 5% 1/10W
R3019	1-216-097-00	s	METAL, CHIP 100K 5% 1/10W
R3020	1-216-073-00	s	METAL, CHIP 10K 5% 1/10W
R3021	1-216-073-00	s	METAL, CHIP 10K 5% 1/10W
R3022	1-216-073-00	s	METAL, CHIP 10K 5% 1/10W
R3023	1-216-073-00	s	METAL, CHIP 10K 5% 1/10W
R3024	1-216-073-00	s	METAL, CHIP 10K 5% 1/10W
R3025	1-216-073-00	s	METAL, CHIP 10K 5% 1/10W
R3026	1-216-295-11	s	CONDUCTOR, CHIP 0
R3027	1-216-295-11	s	CONDUCTOR, CHIP 0
R3028	1-216-295-11	s	CONDUCTOR, CHIP 0
R3029	1-216-295-11	s	CONDUCTOR, CHIP 0

(AA-90 BOARD)

Ref. No. or Q'ty	Part No.	SP	Description
R3030	1-216-295-11	s	CONDUCTOR, CHIP 0
R3031	1-216-097-00	s	METAL, CHIP 100K 5% 1/10W
R3032	1-216-097-00	s	METAL, CHIP 100K 5% 1/10W
R3033	1-216-097-00	s	METAL, CHIP 100K 5% 1/10W
R3034	1-208-782-11	s	METAL, CHIP 1K 0.50% 1/10W
R3035	1-216-097-00	s	METAL, CHIP 100K 5% 1/10W
R3036	1-216-121-91	s	METAL, CHIP 1M 5% 1/10W
R3037	1-216-073-00	s	METAL, CHIP 10K 5% 1/10W
R3038	1-208-816-11	s	METAL, CHIP 27K 0.50% 1/10W
R3039	1-208-810-11	s	METAL, CHIP 15K 0.50% 1/10W
R3040	1-208-784-11	s	METAL, CHIP 1.2K 0.50% 1/10W
R3041	1-208-769-11	s	METAL, CHIP 300 0.50% 1/10W
R3042	1-208-758-11	s	METAL, CHIP 100 0.50% 1/10W
R3043	1-216-065-00	s	METAL, CHIP 4.7K 5% 1/10W
R3044	1-216-065-00	s	METAL, CHIP 4.7K 5% 1/10W
R3045	1-216-065-00	s	METAL, CHIP 4.7K 5% 1/10W
R3046	1-208-789-11	s	METAL, CHIP 2K 0.50% 1/10W
R3047	1-216-073-00	s	METAL, CHIP 10K 5% 1/10W
R3048	1-216-033-00	s	METAL, CHIP 220 5% 1/10W
R3049	1-216-065-00	s	METAL, CHIP 4.7K 5% 1/10W
R3050	1-216-039-00	s	METAL, CHIP 390 5% 1/10W
R3051	1-216-047-91	s	METAL, CHIP 820 5% 1/10W
R3052	1-216-065-00	s	METAL, CHIP 4.7K 5% 1/10W
R3053	1-216-097-00	s	METAL, CHIP 100K 5% 1/10W
R3054	1-216-121-91	s	METAL, CHIP 1M 5% 1/10W
R3055	1-216-073-00	s	METAL, CHIP 10K 5% 1/10W
R3056	1-208-816-11	s	METAL, CHIP 27K 0.50% 1/10W
R3057	1-208-810-11	s	METAL, CHIP 15K 0.50% 1/10W
R3058	1-208-784-11	s	METAL, CHIP 1.2K 0.50% 1/10W
R3059	1-208-769-11	s	METAL, CHIP 300 0.50% 1/10W
R3060	1-208-758-11	s	METAL, CHIP 100 0.50% 1/10W
R3061	1-216-065-00	s	METAL, CHIP 4.7K 5% 1/10W
R3062	1-216-065-00	s	METAL, CHIP 4.7K 5% 1/10W
R3063	1-216-065-00	s	METAL, CHIP 4.7K 5% 1/10W
R3064	1-208-789-11	s	METAL, CHIP 2K 0.50% 1/10W
R3065	1-216-073-00	s	METAL, CHIP 10K 5% 1/10W
R3066	1-216-033-00	s	METAL, CHIP 220 5% 1/10W
R3067	1-216-065-00	s	METAL, CHIP 4.7K 5% 1/10W
R3068	1-216-039-00	s	METAL, CHIP 390 5% 1/10W
R3069	1-216-047-91	s	METAL, CHIP 820 5% 1/10W
R3070	1-216-065-00	s	METAL, CHIP 4.7K 5% 1/10W
R3071	1-216-073-00	s	METAL, CHIP 10K 5% 1/10W
R3072	1-216-073-00	s	METAL, CHIP 10K 5% 1/10W
RV41	1-237-036-11	s	RES, ADJ METAL 10K
RV81	1-237-036-11	s	RES, ADJ METAL 10K
RV101	1-237-040-11	s	RES, ADJ METAL 200K
RV201	1-237-037-11	s	RES, ADJ METAL 20K
RV301	1-237-037-11	s	RES, ADJ METAL 20K
RV401	1-237-036-11	s	RES, ADJ METAL 10K
RV2000	1-237-036-11	s	RES, ADJ METAL 10K
S201	1-571-259-11	s	SWITCH, SLIDE
S301	1-571-259-11	s	SWITCH, SLIDE
S2002	1-571-395-11	s	SWITCH, SLIDE
S2003	1-570-711-11	s	SWITCH, SLIDE
S2004	1-571-395-11	s	SWITCH, SLIDE
S2005	1-571-259-11	s	SWITCH, SLIDE
S2006	1-570-711-11	s	SWITCH, SLIDE
S2007	1-570-711-11	s	SWITCH, SLIDE

(AA-90 BOARD)

Ref. No. or Q'ty	Part No.	SP	Description
S2081	1-571-098-11	s	SWITCH, SLIDE
T201	1-426-472-11	s	COIL, FM RECOVER
T301	1-426-473-11	s	COIL, FM RECOVER
T401	1-426-474-11	s	COIL, FM RECOVER
W1	1-957-713-11	o	HARNESS, SUB (AU RF)

AU-234 BOARD

Ref. No. or Q'ty	Part No.	SP	Description
1pc	A-8315-038-C	o	MOUNTED CIRCUIT BOARD, AU-234
3pcs	4-937-336-02	o	HOLDER, LED
C5	1-163-038-00	s	CERAMIC, CHIP 0.1uF 25V
C6	1-163-038-00	s	CERAMIC, CHIP 0.1uF 25V
C7	1-126-395-11	s	ELECT 22uF 20% 16V
C8	1-126-395-11	s	ELECT 22uF 20% 16V
C9	1-128-397-21	s	ELECT 100uF 20% 16V
C10	1-128-397-21	s	ELECT 100uF 20% 16V
C11	1-128-397-21	s	ELECT 100uF 20% 16V
C12	1-128-397-21	s	ELECT 100uF 20% 16V
C13	1-163-038-00	s	CERAMIC, CHIP 0.1uF 25V
C14	1-163-038-00	s	CERAMIC, CHIP 0.1uF 25V
C15	1-163-243-11	s	CERAMIC, CHIP 47PF 5% 50V
C16	1-163-243-11	s	CERAMIC, CHIP 47PF 5% 50V
C17	1-126-395-11	s	ELECT 22uF 20% 16V
C18	1-126-395-11	s	ELECT 22uF 20% 16V
C19	1-163-038-00	s	CERAMIC, CHIP 0.1uF 25V
C20	1-104-852-11	s	TANTALUM, CHIP 22uF 20% 10V
C21	1-104-852-11	s	TANTALUM, CHIP 22uF 20% 10V
C22	1-126-392-11	s	ELECT, CHIP 100uF 20% 6.3V
C23	1-163-038-00	s	CERAMIC, CHIP 0.1uF 25V
C27	1-163-239-11	s	CERAMIC, CHIP 33PF 5% 50V
C29	1-104-752-11	s	TANTALUM, CHIP 33uF 20% 6.3V
C30	1-104-752-11	s	TANTALUM, CHIP 33uF 20% 6.3V
C31	1-104-752-11	s	TANTALUM, CHIP 33uF 20% 6.3V
C32	1-104-752-11	s	TANTALUM, CHIP 33uF 20% 6.3V
C33	1-135-177-21	s	TANTALUM, CHIP 1uF 10% 25V
C34	1-163-251-11	s	CERAMIC, CHIP 100PF 5% 50V
C35	1-135-180-21	s	TANTALUM, CHIP 33uF 10% 10V
C36	1-135-180-21	s	TANTALUM, CHIP 33uF 10% 10V
C37	1-135-073-00	s	TANTALUM, CHIP 0.33uF 10% 35V
C38	1-163-038-00	s	CERAMIC, CHIP 0.1uF 25V
C39	1-135-180-21	s	TANTALUM, CHIP 33uF 10% 10V
C40	1-163-038-00	s	CERAMIC, CHIP 0.1uF 25V
C41	1-104-913-11	s	TANTALUM, CHIP 10uF 20% 16V
CN1	1-569-775-21	o	PIN, CONNECTOR (SMD) 5P
CN2	1-760-388-11	o	CONNECTOR PIN (SMD) 9 PIN
CN3	1-695-223-21	s	PIN, CONNECTOR (SMD) 10P
CN4	1-764-643-21	o	PIN, CONNECTOR (SMD) 11P
CN5	1-506-501-11	o	HEADER, CONNECTOR 20P
D2	8-719-981-49	s	DIODE GL3ED8
D3	8-719-981-49	s	DIODE GL3ED8
D4	8-719-981-49	s	DIODE GL3ED8
D5	8-719-981-49	s	DIODE GL3ED8
D6	8-719-981-49	s	DIODE GL3ED8
D7	8-719-981-49	s	DIODE GL3ED8
D9	8-719-027-88	s	DIODE GL5KG8T
D10	8-719-939-39	s	LED GL5HD8, RED
D11	8-719-939-39	s	LED GL5HD8, RED
FL1	1-239-601-31	s	FERRITE 0uH
FL2	1-239-601-31	s	FERRITE 0uH
FL3	1-239-601-31	s	FERRITE 0uH
FL4	1-239-601-31	s	FERRITE 0uH
FL5	1-239-601-31	s	FERRITE 0uH
FL6	1-239-601-31	s	FERRITE 0uH
IC1	8-759-700-09	s	IC NJM2043M-D
IC2	8-759-369-74	s	IC NJM4556AM-TE2

(AU-234 BOARD)

Ref. No. or Q'ty	Part No.	SP	Description
IC3	8-759-100-96	s	IC UPC4558G2
IC4	8-759-233-44	s	IC TC74HC595AF
IC5	8-759-238-51	s	IC TC74HC4051AF(EL)
Q2	8-729-101-07	s	TRANSISTOR 2SB798
Q3	8-729-120-28	s	TRANSISTOR 2SC1623-L5L6
Q4	8-729-101-07	s	TRANSISTOR 2SB798
Q5	8-729-120-28	s	TRANSISTOR 2SC1623-L5L6
Q6	8-729-924-39	s	TRANSISTOR DTC143XU
Q7	8-729-924-39	s	TRANSISTOR DTC143XU
Q8	8-729-924-39	s	TRANSISTOR DTC143XU
Q9	8-729-120-28	s	TRANSISTOR 2SC1623-L5L6
Q10	8-729-120-28	s	TRANSISTOR 2SC1623-L5L6
R4	1-208-838-91	s	METAL, CHIP 220K 0.50% 1/10W
R6	1-216-009-91	s	METAL, CHIP 22 5% 1/10W
R7	1-216-009-91	s	METAL, CHIP 22 5% 1/10W
R8	1-216-295-11	s	CONDUCTOR, CHIP 0
R9	1-216-097-00	s	METAL, CHIP 100K 5% 1/10W
R10	1-216-097-00	s	METAL, CHIP 100K 5% 1/10W
R11	1-216-017-00	s	METAL, CHIP 47 5% 1/10W
R12	1-216-017-00	s	METAL, CHIP 47 5% 1/10W
R13	1-208-794-11	s	METAL, CHIP 3.3K 0.50% 1/10W
R17	1-208-820-11	s	METAL, CHIP 39K 0.50% 1/10W
R18	1-208-782-11	s	METAL, CHIP 1K 0.50% 1/10W
R19	1-216-097-00	s	METAL, CHIP 100K 5% 1/10W
R20	1-208-820-11	s	METAL, CHIP 39K 0.50% 1/10W
R21	1-208-782-11	s	METAL, CHIP 1K 0.50% 1/10W
R22	1-216-097-00	s	METAL, CHIP 100K 5% 1/10W
R23	1-216-017-00	s	METAL, CHIP 47 5% 1/10W
R24	1-216-017-00	s	METAL, CHIP 47 5% 1/10W
R25	1-216-065-00	s	METAL, CHIP 4.7K 5% 1/10W
R26	1-216-065-00	s	METAL, CHIP 4.7K 5% 1/10W
R27	1-216-065-00	s	METAL, CHIP 4.7K 5% 1/10W
R28	1-216-065-00	s	METAL, CHIP 4.7K 5% 1/10W
R29	1-216-031-00	s	METAL, CHIP 180 5% 1/10W
R30	1-216-031-00	s	METAL, CHIP 180 5% 1/10W
R31	1-216-031-00	s	METAL, CHIP 180 5% 1/10W
R32	1-216-031-00	s	METAL, CHIP 180 5% 1/10W
R33	1-216-031-00	s	METAL, CHIP 180 5% 1/10W
R34	1-216-031-00	s	METAL, CHIP 180 5% 1/10W
R35	1-216-031-00	s	METAL, CHIP 180 5% 1/10W
R36	1-216-031-00	s	METAL, CHIP 180 5% 1/10W
R37	1-216-031-00	s	METAL, CHIP 180 5% 1/10W
R38	1-216-031-00	s	METAL, CHIP 180 5% 1/10W
R39	1-216-031-00	s	METAL, CHIP 180 5% 1/10W
R40	1-216-031-00	s	METAL, CHIP 180 5% 1/10W
R42	1-216-037-00	s	METAL, CHIP 330 5% 1/10W
R43	1-216-045-00	s	METAL, CHIP 680 5% 1/10W
R44	1-216-045-00	s	METAL, CHIP 680 5% 1/10W
R45	1-216-097-00	s	METAL, CHIP 100K 5% 1/10W
R46	1-216-073-00	s	METAL, CHIP 10K 5% 1/10W
R47	1-216-073-00	s	METAL, CHIP 10K 5% 1/10W
R48	1-216-073-00	s	METAL, CHIP 10K 5% 1/10W
R52	1-216-097-00	s	METAL, CHIP 100K 5% 1/10W
R53	1-216-097-00	s	METAL, CHIP 100K 5% 1/10W
R54	1-216-097-00	s	METAL, CHIP 100K 5% 1/10W
R58	1-208-790-11	s	METAL, CHIP 2.2K 0.50% 1/10W
R59	1-216-073-00	s	METAL, CHIP 10K 5% 1/10W
R61	1-216-017-00	s	METAL, CHIP 47 5% 1/10W

(AU-234 BOARD)

Ref. No. or Q'ty	Part No.	SP	Description
R62	1-208-813-11	s	METAL, CHIP 20K 0.50% 1/10W
R63	1-216-017-00	s	METAL, CHIP 47 5% 1/10W
R64	1-208-806-11	s	METAL, CHIP 10K 0.50% 1/10W
R65	1-208-806-11	s	METAL, CHIP 10K 0.50% 1/10W
R66	1-208-813-11	s	METAL, CHIP 20K 0.50% 1/10W
R67	1-208-806-11	s	METAL, CHIP 10K 0.50% 1/10W
R68	1-208-806-11	s	METAL, CHIP 10K 0.50% 1/10W
R69	1-208-794-11	s	METAL, CHIP 3.3K 0.50% 1/10W
R70	1-216-017-00	s	METAL, CHIP 47 5% 1/10W
R71	1-216-017-00	s	METAL, CHIP 47 5% 1/10W
R72	1-216-097-00	s	METAL, CHIP 100K 5% 1/10W
R73	1-216-097-00	s	METAL, CHIP 100K 5% 1/10W
R74	1-216-097-00	s	METAL, CHIP 100K 5% 1/10W
R75	1-216-097-00	s	METAL, CHIP 100K 5% 1/10W
R76	1-216-097-00	s	METAL, CHIP 100K 5% 1/10W
R77	1-216-097-00	s	METAL, CHIP 100K 5% 1/10W
R78	1-216-097-00	s	METAL, CHIP 100K 5% 1/10W
R79	1-216-073-00	s	METAL, CHIP 10K 5% 1/10W
R80	1-216-097-00	s	METAL, CHIP 100K 5% 1/10W
R81	1-216-073-00	s	METAL, CHIP 10K 5% 1/10W
R82	1-216-037-00	s	METAL, CHIP 330 5% 1/10W
R83	1-216-009-91	s	METAL, CHIP 22 5% 1/10W
R84	1-216-097-00	s	METAL, CHIP 100K 5% 1/10W
R85	1-216-073-00	s	METAL, CHIP 10K 5% 1/10W
R86	1-216-097-00	s	METAL, CHIP 100K 5% 1/10W
R87	1-208-790-11	s	METAL, CHIP 2.2K 0.50% 1/10W
R88	1-216-009-91	s	METAL, CHIP 22 5% 1/10W
R89	1-216-025-11	s	METAL, CHIP 100 5% 1/10W
R90	1-216-097-00	s	METAL, CHIP 100K 5% 1/10W
R91	1-208-838-91	s	METAL, CHIP 220K 0.50% 1/10W
R92	1-208-838-91	s	METAL, CHIP 220K 0.50% 1/10W
R93	1-216-295-11	s	CONDUCTOR, CHIP 0
R94	1-216-295-11	s	CONDUCTOR, CHIP 0
R95	1-216-295-11	s	CONDUCTOR, CHIP 0
R96	1-208-782-11	s	METAL, CHIP 1K 0.50% 1/10W
R97	1-208-782-11	s	METAL, CHIP 1K 0.50% 1/10W
R98	1-208-838-91	s	METAL, CHIP 220K 0.50% 1/10W
R99	1-208-820-11	s	METAL, CHIP 39K 0.50% 1/10W
R100	1-208-806-11	s	METAL, CHIP 10K 0.50% 1/10W
RV1	1-241-522-11	s	RES, VAR CARBON 10K
RV2	1-241-522-11	s	RES, VAR CARBON 10K
S1	1-570-984-11	s	SWITCH, TOGGLE
S2	1-570-984-11	s	SWITCH, TOGGLE
S3	1-570-985-11	s	SWITCH, TOGGLE
S4	1-771-112-11	s	SWITCH, TACTILE (ILLUMINATED)
S5	1-571-277-11	s	SWITCH, SLIDE

CN-1325 BOARD

S/N 10001 - 11000[for UC]
S/N 30001 - 31000[for J]
S/N 40001 - 41000[for CE]

Ref. No. or Q'ty	Part No.	SP	Description
1pc	A-8315-043-A	o	MOUNTED CIRCUIT BOARD, CN-1325
1pc	1-573-176-11	o	CONTACT, FEMALE AWG22-30
1pc	1-580-591-11	o	HOUSING, 30P
1pc	1-580-599-11	o	CONTACT, FEMALE AWG26-30
CN4	1-573-584-11	s	CONNECTOR, BNC (RECEPTACLE)
CN5	1-573-584-11	s	CONNECTOR, BNC (RECEPTACLE)
CN6	1-573-584-11	s	CONNECTOR, BNC (RECEPTACLE)
CN7	1-573-584-11	s	CONNECTOR, BNC (RECEPTACLE)
CN8	1-770-081-12	s	CONNECTOR, BNC
CN9	1-770-081-12	s	CONNECTOR, BNC
R1	1-215-394-00	s	METAL 75 1% 1/6W
R2	1-215-394-00	s	METAL 75 1% 1/6W
R3	1-215-394-00	s	METAL 75 1% 1/6W
R4	1-215-394-00	s	METAL 75 1% 1/6W
S1	1-570-157-51	s	SWITCH, SLIDE
S2	1-570-157-51	s	SWITCH, SLIDE
S3	1-570-157-51	s	SWITCH, SLIDE
S4	1-570-157-51	s	SWITCH, SLIDE

CN-1325A BOARD

S/N 11001 and higher[for UC]
S/N 31001 and higher[for J]
S/N 41001 and higher[for CE]

Ref. No. or Q'ty	Part No.	SP	Description
1pc	A-8322-094-A		MOUNTED CIRCUIT BOARD, CN-1325A
1pc	1-573-176-11	o	CONTACT, FEMALE AWG22-26
1pc	1-580-591-11	o	HOUSING, 30P
1pc	1-580-599-11	o	CONTACT, FEMALE AWG26-30
CN4	1-573-584-11	s	CONNECTOR, BNC, FEMALE
CN5	1-573-584-11	s	CONNECTOR, BNC, FEMALE
CN6	1-573-584-11	s	CONNECTOR, BNC, FEMALE
CN7	1-573-584-11	s	CONNECTOR, BNC, FEMALE
CN8	1-793-260-11	s	CONNECTOR, BNC (RECEPTACLE)
CN9	1-793-260-11	s	CONNECTOR, BNC (RECEPTACLE)
R1	1-215-394-00	s	METAL 75 1% 1/6W
R2	1-215-394-00	s	METAL 75 1% 1/6W
R3	1-215-394-00	s	METAL 75 1% 1/6W
R4	1-215-394-00	s	METAL 75 1% 1/6W
S1	1-692-816-11	s	SWITCH, SLIDE
S2	1-692-816-11	s	SWITCH, SLIDE
S3	1-692-816-11	s	SWITCH, SLIDE
S4	1-692-816-11	s	SWITCH, SLIDE

CN-1327 BOARD

Ref. No. or Q'ty	Part No.	SP	Description
1pc	A-8315-044-A	o	MOUNTED CIRCUIT BOARD, CN-1327
1pc	1-766-387-11	o	CONTACT, FEMALE
CN2	1-750-788-11	s	CONNECTOR, XLR 3P FEMALE
CN3	1-750-788-11	s	CONNECTOR, XLR 3P FEMALE
CN4	1-750-787-11	s	CONNECTOR, XLR 3P MALE

CN-1328 BOARD

Ref. No. or Q'ty	Part No.	SP	Description
1pc	A-8315-059-A	o	MOUNTED CIRCUIT BOARD, CN-1328 [for J, CE]
1pc	A-8315-045-A	o	MOUNTED CIRCUIT BOARD, CN-1328 [for UC]
1pc	1-565-977-11	s	CONTACT, FEMALE AWG 28-32
CN3	1-750-890-11	s	CONNECTOR, D-SUB 25P [for J, CE]
CN3	1-569-713-11	s	CONNECTOR, D-SUB 25P [for UC]
CN4	1-750-890-11	s	CONNECTOR, D-SUB 25P [for J, CE]
CN4	1-569-713-11	s	CONNECTOR, D-SUB 25P [for UC]

CN-1350 BOARD

Ref. No. or Q'ty	Part No.	SP	Description
1pc	A-8315-060-A	o	MOUNTED CIRCUIT BOARD, CN-1350 [for J, CE]
1pc	A-8315-047-A	o	MOUNTED CIRCUIT BOARD, CN-1350 [for UC]
1pc	1-565-977-11	s	CONTACT, FEMALE AWG 28-32
1pc	1-573-176-11	o	CONTACT, FEMALE AWG22-30
1pc	1-580-586-11	o	HOUSING, 20P
1pc	1-580-599-11	o	CONTACT, FEMALE AWG26-30
CN1	1-580-539-11	o	CONNECTOR PC BOARD 20P
CN3	1-750-890-11	s	CONNECTOR, D-SUB 25P [for J, CE]
CN3	1-569-713-11	s	CONNECTOR, D-SUB 25P [for UC]

CN-1351 BOARD

Ref. No. or Q'ty	Part No.	SP	Description
1pc	A-8315-046-A	o	MOUNTED CIRCUIT BOARD, CN-1351
1pc	1-565-978-11	o	HOUSING 6P
1pc	1-766-387-11	o	TERMINAL, SOLDERLESS 1P
CN1	1-565-878-11	s	CONNECTOR 6P, MALE
CN2	1-750-785-11	s	CONNECTOR, XLR 3P, MALE

CT-181 BOARD

Ref. No. or Q'ty	Part No.	SP	Description
1pc	A-8315-033-A	o	MOUNTED CIRCUIT BOARD, CT-181
1pc	2-251-622-01	o	LEVER, PC BOARD
1pc	7-682-903-01	s	SCREW +PWH 3X5
3pcs	3-719-381-21	s	SCREW (M2X6)
C280	1-104-913-11	s	TANTALUM, CHIP 10uF 20% 16V
C281	1-104-913-11	s	TANTALUM, CHIP 10uF 20% 16V
C282	1-163-038-00	s	CERAMIC, CHIP 0.1uF 25V
C283	1-163-038-00	s	CERAMIC, CHIP 0.1uF 25V
C286	1-163-275-11	s	CERAMIC, CHIP 0.001uF 5% 50V
C287	1-163-275-11	s	CERAMIC, CHIP 0.001uF 5% 50V
C290	1-104-913-11	s	TANTALUM, CHIP 10uF 20% 16V
C291	1-163-235-11	s	CERAMIC, CHIP 22PF 5% 50V
C292	1-163-038-00	s	CERAMIC, CHIP 0.1uF 25V
C300	1-107-689-21	s	TANTALUM, CHIP 1uF 20% 35V
C301	1-163-038-00	s	CERAMIC, CHIP 0.1uF 25V
C303	1-163-222-11	s	CERAMIC, CHIP 5PF 0.5PF 50V
C307	1-163-038-00	s	CERAMIC, CHIP 0.1uF 25V
C308	1-163-038-00	s	CERAMIC, CHIP 0.1uF 25V
C309	1-163-121-00	s	CERAMIC, CHIP 150PF 5% 50V
C310	1-163-087-00	s	CERAMIC, CHIP 4PF 0.25PF 50V
C311	1-163-241-11	s	CERAMIC, CHIP 39PF 5% 50V
C312	1-163-038-00	s	CERAMIC, CHIP 0.1uF 25V
C313	1-163-038-00	s	CERAMIC, CHIP 0.1uF 25V
C314	1-163-038-00	s	CERAMIC, CHIP 0.1uF 25V
C315	1-163-038-00	s	CERAMIC, CHIP 0.1uF 25V
C316	1-163-038-00	s	CERAMIC, CHIP 0.1uF 25V
C317	1-163-038-00	s	CERAMIC, CHIP 0.1uF 25V
C318	1-163-038-00	s	CERAMIC, CHIP 0.1uF 25V
C319	1-163-038-00	s	CERAMIC, CHIP 0.1uF 25V
C320	1-163-038-00	s	CERAMIC, CHIP 0.1uF 25V
C321	1-163-038-00	s	CERAMIC, CHIP 0.1uF 25V
C322	1-163-038-00	s	CERAMIC, CHIP 0.1uF 25V
C323	1-163-038-00	s	CERAMIC, CHIP 0.1uF 25V
C324	1-163-038-00	s	CERAMIC, CHIP 0.1uF 25V
C325	1-163-038-00	s	CERAMIC, CHIP 0.1uF 25V
C326	1-163-038-00	s	CERAMIC, CHIP 0.1uF 25V
C327	1-163-038-00	s	CERAMIC, CHIP 0.1uF 25V
C328	1-163-038-00	s	CERAMIC, CHIP 0.1uF 25V
C329	1-163-038-00	s	CERAMIC, CHIP 0.1uF 25V
C331	1-104-913-11	s	TANTALUM, CHIP 10uF 20% 16V
C332	1-163-021-91	s	CERAMIC 0.01uF 10% 50V
C333	1-104-913-11	s	TANTALUM, CHIP 10uF 20% 16V
C334	1-163-021-91	s	CERAMIC 0.01uF 10% 50V
C335	1-104-823-11	s	TANTALUM, CHIP 47uF 20% 16V
C336	1-163-220-11	s	CERAMIC, CHIP 3PF 50V
C337	1-163-038-00	s	CERAMIC, CHIP 0.1uF 25V
C338	1-163-038-00	s	CERAMIC, CHIP 0.1uF 25V
C339	1-104-913-11	s	TANTALUM, CHIP 10uF 20% 16V
C340	1-163-085-00	s	CERAMIC, CHIP 2PF 50V
C341	1-163-085-00	s	CERAMIC, CHIP 2PF 50V
C342	1-164-161-11	s	CERAMIC, CHIP 0.0022uF 10% 50V
C343	1-113-981-11	s	TANTALUM, CHIP 22uF 20% 20V
C344	1-163-038-00	s	CERAMIC, CHIP 0.1uF 25V
C345	1-164-161-11	s	CERAMIC, CHIP 0.0022uF 10% 50V
C346	1-164-161-11	s	CERAMIC, CHIP 0.0022uF 10% 50V
C347	1-164-161-11	s	CERAMIC, CHIP 0.0022uF 10% 50V
C348	1-164-161-11	s	CERAMIC, CHIP 0.0022uF 10% 50V
C349	1-163-021-91	s	CERAMIC 0.01uF 10% 50V
C355	1-164-161-11	s	CERAMIC, CHIP 0.0022uF 10% 50V

(CT-181 BOARD)

Ref. No. or Q'ty	Part No.	SP	Description
C356	1-163-021-91	s	CERAMIC 0.01uF 10% 50V
C357	1-163-275-11	s	CERAMIC, CHIP 0.001uF 5% 50V
C358	1-163-275-11	s	CERAMIC, CHIP 0.001uF 5% 50V
C359	1-163-038-00	s	CERAMIC, CHIP 0.1uF 25V
C360	1-163-275-11	s	CERAMIC, CHIP 0.001uF 5% 50V
C361	1-163-231-11	s	CERAMIC, CHIP 15PF 5% 50V
C362	1-163-021-91	s	CERAMIC 0.01uF 10% 50V
C363	1-163-275-11	s	CERAMIC, CHIP 0.001uF 5% 50V
C364	1-113-981-11	s	TANTALUM, CHIP 22uF 20% 20V
C365	1-104-823-11	s	TANTALUM, CHIP 47uF 20% 16V
C366	1-163-038-00	s	CERAMIC, CHIP 0.1uF 25V
C367	1-163-021-91	s	CERAMIC 0.01uF 10% 50V
C368	1-163-021-91	s	CERAMIC 0.01uF 10% 50V
C369	1-163-021-91	s	CERAMIC 0.01uF 10% 50V
C370	1-135-177-21	s	TANTALUM, CHIP 1uF 10% 25V
C371	1-163-234-11	s	CERAMIC, CHIP 20PF 5% 50V
C372	1-135-145-11	s	TANTALUM, CHIP 0.47uF 10% 35V
C373	1-113-991-11	s	TANTALUM, CHIP 33uF 20% 16V
C374	1-163-021-91	s	CERAMIC 0.01uF 10% 50V
C375	1-113-991-11	s	TANTALUM, CHIP 33uF 20% 16V
C376	1-163-021-91	s	CERAMIC 0.01uF 10% 50V
C377	1-104-601-11	s	ELECT 10uF 20% 10V
C378	1-104-913-11	s	TANTALUM, CHIP 10uF 20% 16V
C379	1-163-038-00	s	CERAMIC, CHIP 0.1uF 25V
C380	1-163-231-11	s	CERAMIC, CHIP 15PF 5% 50V
C382	1-163-251-11	s	CERAMIC, CHIP 100PF 5% 50V
C410	1-163-038-00	s	CERAMIC, CHIP 0.1uF 25V
C411	1-104-913-11	s	TANTALUM, CHIP 10uF 20% 16V
C412	1-104-913-11	s	TANTALUM, CHIP 10uF 20% 16V
C413	1-104-913-11	s	TANTALUM, CHIP 10uF 20% 16V
C414	1-163-038-00	s	CERAMIC, CHIP 0.1uF 25V
C417	1-104-913-11	s	TANTALUM, CHIP 10uF 20% 16V
C418	1-163-021-91	s	CERAMIC 0.01uF 10% 50V
C419	1-104-913-11	s	TANTALUM, CHIP 10uF 20% 16V
C420	1-163-235-11	s	CERAMIC, CHIP 22PF 5% 50V
C421	1-163-235-11	s	CERAMIC, CHIP 22PF 5% 50V
C430	1-104-913-11	s	TANTALUM, CHIP 10uF 20% 16V
C431	1-104-913-11	s	TANTALUM, CHIP 10uF 20% 16V
C432	1-104-913-11	s	TANTALUM, CHIP 10uF 20% 16V
C433	1-104-601-11	s	ELECT 10uF 20% 10V
C434	1-163-038-00	s	CERAMIC, CHIP 0.1uF 25V
C435	1-163-038-00	s	CERAMIC, CHIP 0.1uF 25V
C436	1-104-913-11	s	TANTALUM, CHIP 10uF 20% 16V
C437	1-163-038-00	s	CERAMIC, CHIP 0.1uF 25V
C438	1-163-038-00	s	CERAMIC, CHIP 0.1uF 25V
C439	1-163-038-00	s	CERAMIC, CHIP 0.1uF 25V
C440	1-163-038-00	s	CERAMIC, CHIP 0.1uF 25V
C441	1-163-038-00	s	CERAMIC, CHIP 0.1uF 25V
C442	1-104-913-11	s	TANTALUM, CHIP 10uF 20% 16V
C443	1-163-038-00	s	CERAMIC, CHIP 0.1uF 25V
C520	1-135-210-11	s	TANTALUM, CHIP 4.7uF 20% 10V
C521	1-104-913-11	s	TANTALUM, CHIP 10uF 20% 16V
C522	1-113-991-11	s	TANTALUM, CHIP 33uF 20% 16V
C523	1-113-991-11	s	TANTALUM, CHIP 33uF 20% 16V
C601	1-163-021-91	s	CERAMIC 0.01uF 10% 50V
C602	1-163-021-91	s	CERAMIC 0.01uF 10% 50V
C604	1-163-251-11	s	CERAMIC, CHIP 100PF 5% 50V
C605	1-163-021-91	s	CERAMIC 0.01uF 10% 50V
C606	1-163-021-91	s	CERAMIC 0.01uF 10% 50V

(CT-181 BOARD)

Ref. No. or Q'ty	Part No.	SP	Description
C607	1-104-851-11	s	TANTALUM, CHIP 10uF 20% 10V
C608	1-104-851-11	s	TANTALUM, CHIP 10uF 20% 10V
C1000	1-163-038-00	s	CERAMIC, CHIP 0.1uF 25V
C1001	1-163-038-00	s	CERAMIC, CHIP 0.1uF 25V
C1003	1-163-038-00	s	CERAMIC, CHIP 0.1uF 25V
C1004	1-163-038-00	s	CERAMIC, CHIP 0.1uF 25V
C1005	1-163-038-00	s	CERAMIC, CHIP 0.1uF 25V
C1006	1-163-038-00	s	CERAMIC, CHIP 0.1uF 25V
C1007	1-163-038-00	s	CERAMIC, CHIP 0.1uF 25V
C1009	1-163-038-00	s	CERAMIC, CHIP 0.1uF 25V
C1010	1-163-038-00	s	CERAMIC, CHIP 0.1uF 25V
C1011	1-163-038-00	s	CERAMIC, CHIP 0.1uF 25V
C1013	1-163-038-00	s	CERAMIC, CHIP 0.1uF 25V
C1014	1-163-038-00	s	CERAMIC, CHIP 0.1uF 25V
C1015	1-163-038-00	s	CERAMIC, CHIP 0.1uF 25V
C1016	1-163-038-00	s	CERAMIC, CHIP 0.1uF 25V
C1017	1-163-038-00	s	CERAMIC, CHIP 0.1uF 25V
C1018	1-163-038-00	s	CERAMIC, CHIP 0.1uF 25V
C1019	1-126-396-11	s	ELECT, CHIP 47uF 20% 16V
C1020	1-107-689-21	s	TANTALUM, CHIP 1uF 20% 35V
C1022	1-163-038-00	s	CERAMIC, CHIP 0.1uF 25V
C1024	1-163-235-11	s	CERAMIC, CHIP 22PF 5% 50V
C1026	1-163-038-00	s	CERAMIC, CHIP 0.1uF 25V
C1027	1-163-038-00	s	CERAMIC, CHIP 0.1uF 25V
C1028	1-163-038-00	s	CERAMIC, CHIP 0.1uF 25V
C1029	1-163-038-00	s	CERAMIC, CHIP 0.1uF 25V
C1030	1-163-038-00	s	CERAMIC, CHIP 0.1uF 25V
C1031	1-163-038-00	s	CERAMIC, CHIP 0.1uF 25V
C1032	1-163-038-00	s	CERAMIC, CHIP 0.1uF 25V
C1033	1-126-396-11	s	ELECT, CHIP 47uF 20% 16V
C1036	1-163-235-11	s	CERAMIC, CHIP 22PF 5% 50V
C1037	1-163-235-11	s	CERAMIC, CHIP 22PF 5% 50V
C1039	1-163-038-00	s	CERAMIC, CHIP 0.1uF 25V
C1040	1-163-235-11	s	CERAMIC, CHIP 22PF 5% 50V
C1041	1-163-235-11	s	CERAMIC, CHIP 22PF 5% 50V
C1042	1-163-038-00	s	CERAMIC, CHIP 0.1uF 25V
C1045	1-163-038-00	s	CERAMIC, CHIP 0.1uF 25V
C1046	1-163-038-00	s	CERAMIC, CHIP 0.1uF 25V
C1047	1-126-396-11	s	ELECT, CHIP 47uF 20% 16V
C1048	1-163-038-00	s	CERAMIC, CHIP 0.1uF 25V
C1049	1-163-038-00	s	CERAMIC, CHIP 0.1uF 25V
C1050	1-163-038-00	s	CERAMIC, CHIP 0.1uF 25V
C1051	1-163-038-00	s	CERAMIC, CHIP 0.1uF 25V
C1052	1-163-038-00	s	CERAMIC, CHIP 0.1uF 25V
C1053	1-163-038-00	s	CERAMIC, CHIP 0.1uF 25V
C1054	1-163-038-00	s	CERAMIC, CHIP 0.1uF 25V
C1055	1-126-396-11	s	ELECT, CHIP 47uF 20% 16V
C1056	1-163-235-11	s	CERAMIC, CHIP 22PF 5% 50V
C1057	1-163-235-11	s	CERAMIC, CHIP 22PF 5% 50V
C1058	1-163-235-11	s	CERAMIC, CHIP 22PF 5% 50V
C1059	1-163-038-00	s	CERAMIC, CHIP 0.1uF 25V
C1060	1-163-038-00	s	CERAMIC, CHIP 0.1uF 25V
C1061	1-163-038-00	s	CERAMIC, CHIP 0.1uF 25V
C1062	1-163-038-00	s	CERAMIC, CHIP 0.1uF 25V
C1063	1-163-038-00	s	CERAMIC, CHIP 0.1uF 25V
C1064	1-126-400-11	s	ELECT, CHIP 22uF 20% 35V
C2000	1-128-397-21	s	ELECT 100uF 20% 16V
C2001	1-128-397-21	s	ELECT 100uF 20% 16V
C2002	1-128-397-21	s	ELECT 100uF 20% 16V

(CT-181 BOARD)

Ref. No. or Q'ty	Part No.	SP	Description
C2003	1-128-394-11	s	ELECT 220uF 20% 10V
C2004	1-128-394-11	s	ELECT 220uF 20% 10V
C2005	1-163-021-91	s	CERAMIC 0.01uF 10% 50V
C2006	1-163-021-91	s	CERAMIC 0.01uF 10% 50V
C2007	1-135-149-21	s	TANTALUM, CHIP 2.2uF 10% 10V
C2008	1-163-275-11	s	CERAMIC, CHIP 0.001uF 5% 50V
C2009	1-128-394-11	s	ELECT 220uF 20% 10V
C2010	1-128-394-11	s	ELECT 220uF 20% 10V
C2011	1-163-021-91	s	CERAMIC 0.01uF 10% 50V
C2012	1-135-149-21	s	TANTALUM, CHIP 2.2uF 10% 10V
C2013	1-163-275-11	s	CERAMIC, CHIP 0.001uF 5% 50V
C2014	1-126-395-11	s	ELECT 22uF 20% 16V
C2015	1-163-021-91	s	CERAMIC 0.01uF 10% 50V
C2016	1-135-149-21	s	TANTALUM, CHIP 2.2uF 10% 10V
C2017	1-163-033-91	s	CERAMIC, CHIP 0.022uF 50V
C2018	1-163-033-91	s	CERAMIC, CHIP 0.022uF 50V
C2019	1-163-033-91	s	CERAMIC, CHIP 0.022uF 50V
C2020	1-163-033-91	s	CERAMIC, CHIP 0.022uF 50V
C2021	1-163-038-00	s	CERAMIC, CHIP 0.1uF 25V
C2022	1-163-038-00	s	CERAMIC, CHIP 0.1uF 25V
C2023	1-126-391-11	s	ELECT 47uF 20% 6.3V
C2024	1-126-391-11	s	ELECT 47uF 20% 6.3V
C2025	1-126-400-11	s	ELECT, CHIP 22uF 20% 35V
C2026	1-104-823-11	s	TANTALUM, CHIP 47uF 20% 16V
C2027	1-104-823-11	s	TANTALUM, CHIP 47uF 20% 16V
C2028	1-163-017-00	s	CERAMIC, CHIP 0.0047uF 10% 50V
C2029	1-164-182-11	s	CERAMIC, CHIP 0.0033uF 10% 50V
C2030	1-164-182-11	s	CERAMIC, CHIP 0.0033uF 10% 50V
C2031	1-128-394-11	s	ELECT 220uF 20% 10V
C2032	1-128-394-11	s	ELECT 220uF 20% 10V
CN2	1-766-703-11	s	CONNECTOR, COAXIAL
CN3	1-766-703-11	s	CONNECTOR, COAXIAL
CN6	1-766-703-11	s	CONNECTOR, COAXIAL
CN7	1-766-703-11	s	CONNECTOR, COAXIAL
CN8	1-766-703-11	s	CONNECTOR, COAXIAL
CNI1	1-526-659-00	o	SOCKET, IC 28P
CV1	1-141-430-51	s	CAP, CHIP TRIMMER 6PF
D60	8-719-948-48	s	DIODE HSM88AS-TL
D61	8-719-800-76	s	DIODE 1SS226
D64	8-719-002-81	s	DIODE 1T363
D65	8-719-002-81	s	DIODE 1T363
D2000	8-719-800-13	s	DIODE TLUR163
D2001	8-719-800-13	s	DIODE TLUR163
D2002	8-719-800-13	s	DIODE TLUR163
D2003	8-719-800-13	s	DIODE TLUR163
D2004	8-719-157-23	s	DIODE RD4.7M-B
D2005	8-719-157-23	s	DIODE RD4.7M-B
D2007	8-719-021-31	s	DIODE UZM5.1B
D2008	8-719-157-23	s	DIODE RD4.7M-B
D2009	8-719-104-34	s	DIODE 1S2835
D2010	8-719-104-34	s	DIODE 1S2835
D2011	8-719-801-78	s	DIODE 1SS184
D2012	8-719-801-78	s	DIODE 1SS184
D2013	8-719-021-31	s	DIODE UZM5.1B
D2014	8-719-021-31	s	DIODE UZM5.1B
D2015	8-719-801-78	s	DIODE 1SS184
D2016	8-719-104-34	s	DIODE 1S2835

(CT-181 BOARD)

Ref. No. or Q'ty	Part No.	SP	Description
D2017	8-719-159-85	s	DIODE RD2.0MB
D2018	8-719-104-34	s	DIODE 1S2835
FB1	1-543-775-11	s	FERRITE 0uH
FB2	1-543-775-11	s	FERRITE 0uH
FB3	1-543-775-11	s	FERRITE 0uH
FB4	1-543-775-11	s	FERRITE 0uH
FB5	1-543-775-11	s	FERRITE 0uH
FB6	1-543-775-11	s	FERRITE 0uH
FL3	1-239-015-21	s	FILTER, BANDPASS
FL8	1-239-948-11	s	FILTER, LOW-PASS (VIDEO)
FL9	1-236-272-11	s	FILTER, BANDPASS 70MHz
FL10	1-239-948-11	s	FILTER, LOW-PASS (VIDEO)
FL11	1-239-972-11	s	FILTER, LOW-PASS
IC34	8-759-242-64	s	IC TC4W53F
IC36	8-759-242-64	s	IC TC4W53F
IC38	8-752-065-17	s	IC CXA1122AM-3
IC39	8-752-052-82	s	IC CXA1432M
IC40	8-752-052-82	s	IC CXA1432M
IC41	8-759-054-61	s	IC CLC505AJE
IC44	8-759-281-38	s	IC M52313SP
IC49	8-759-906-53	s	IC TL062CPS
IC50	8-759-242-78	s	IC TC7W02F
IC52	8-759-054-61	s	IC CLC505AJE
IC1000	8-759-392-31	s	IC HD6435368AW34F
IC1001	8-759-252-59	s	IC MAX202CSE
IC1002	8-759-252-59	s	IC MAX202CSE
IC1003	8-759-252-59	s	IC MAX202CSE
IC1004	8-759-925-78	s	IC SN74HC10ANS
IC1005	8-759-927-46	s	IC SN74HC00ANS
IC1007	8-759-926-11	s	IC SN74HC138ANS
IC1008	8-759-542-91	s	IC S-80840ANUP-ED4-T2
IC1009	8-759-925-74	s	IC SN74HC04ANS
IC1010	8-759-096-87	s	IC TC7WU04FU(TE12R)
IC1011	8-759-252-59	s	IC MAX202CSE
IC1012	8-759-165-37	s	IC X24164SIC7000
IC1013	8-759-165-37	s	IC X24164SIC7000
IC1016	8-759-082-57	s	IC TC7W04FU
IC1017	8-759-998-98	s	IC LM358D
IC1020	8-759-242-13	s	IC TC74HC4072AF
IC1021	8-759-242-13	s	IC TC74HC4072AF
IC1023	8-759-544-69	s	IC LC3564BM-10-TLM
IC1024	8-759-149-05	s	IC UPD71051GB-10-3B4
IC1025	8-759-149-05	s	IC UPD71051GB-10-3B4
IC1026	8-759-926-74	s	IC SN74HC393ANS
IC1027	8-759-096-87	s	IC TC7WU04FU(TE12R)
IC1028	8-759-348-79	s	IC TE7751
IC1029	8-759-491-64	o	IC M27C512-CCUTX7V1.05
IC1030	8-759-082-57	s	IC TC7W04FU
IC2000	8-759-906-53	s	IC TL062CPS
IC2001	8-759-906-53	s	IC TL062CPS
IC2002	8-759-711-58	s	IC NJM78L05UA
IC2003	8-759-274-67	s	IC LM4040BIM3X-5.0
IC2004	8-759-274-67	s	IC LM4040BIM3X-5.0
L70	1-412-029-11	s	INDUCTOR, CHIP 10uH
L71	1-412-029-11	s	INDUCTOR, CHIP 10uH
L74	1-412-029-11	s	INDUCTOR, CHIP 10uH
L75	1-412-029-11	s	INDUCTOR, CHIP 10uH
L76	1-412-029-11	s	INDUCTOR, CHIP 10uH

(CT-181 BOARD)

Ref. No. or Q'ty	Part No.	SP	Description
L77	1-412-029-11	s	INDUCTOR, CHIP 10uH
L78	1-408-765-21	s	INDUCTOR, CHIP 1uH
L79	1-410-136-11	s	INDUCTOR 3.3uH
L80	1-422-595-12	s	COIL, AIR CORE
L81	1-422-594-11	s	COIL, AIR CORE
L82	1-412-029-11	s	INDUCTOR, CHIP 10uH
L83	1-412-029-11	s	INDUCTOR, CHIP 10uH
L84	1-412-026-11	s	INDUCTOR, CHIP 1uH
L88	1-412-026-11	s	INDUCTOR, CHIP 1uH
L90	1-412-026-11	s	INDUCTOR, CHIP 1uH
L91	1-412-026-11	s	INDUCTOR, CHIP 1uH
L93	1-412-026-11	s	INDUCTOR, CHIP 1uH
L101	1-412-029-11	s	INDUCTOR, CHIP 10uH
L102	1-409-840-11	s	COIL, BALUN
L104	1-412-029-11	s	INDUCTOR, CHIP 10uH
L105	1-412-029-11	s	INDUCTOR, CHIP 10uH
L1000	1-408-783-00	s	INDUCTOR, CHIP 33uH
L1001	1-408-783-00	s	INDUCTOR, CHIP 33uH
L1002	1-408-783-00	s	INDUCTOR, CHIP 33uH
L1003	1-408-783-00	s	INDUCTOR, CHIP 33uH
L1004	1-408-783-00	s	INDUCTOR, CHIP 33uH
L1005	1-408-783-00	s	INDUCTOR, CHIP 33uH
L1006	1-408-783-00	s	INDUCTOR, CHIP 33uH
L1007	1-408-783-00	s	INDUCTOR, CHIP 33uH
L2000	1-410-948-11	s	INDUCTOR 100uH
L2001	1-410-948-11	s	INDUCTOR 100uH
L2002	1-410-948-11	s	INDUCTOR 100uH
L2003	1-410-948-11	s	INDUCTOR 100uH
L2004	1-410-948-11	s	INDUCTOR 100uH
L2007	1-408-781-00	s	INDUCTOR, CHIP 22uH
L2008	1-408-781-00	s	INDUCTOR, CHIP 22uH
LV2	1-409-820-21	s	COIL, VAR
LV3	1-409-820-21	s	COIL, VAR
PH2000	8-749-010-24	s	PHOTO CUPPLER PS2604L
PH2001	8-749-010-24	s	PHOTO CUPPLER PS2604L
Q110	8-729-403-29	s	TRANSISTOR XN6435
Q111	8-729-403-32	s	TRANSISTOR XN6534
Q112	8-729-403-29	s	TRANSISTOR XN6435
Q116	8-729-120-28	s	TRANSISTOR 2SC1623-L5L6
Q117	8-729-120-28	s	TRANSISTOR 2SC1623-L5L6
Q118	8-729-120-28	s	TRANSISTOR 2SC1623-L5L6
Q119	8-729-120-28	s	TRANSISTOR 2SC1623-L5L6
Q120	8-729-216-22	s	TRANSISTOR 2SA1162
Q121	8-729-216-22	s	TRANSISTOR 2SA1162
Q122	8-729-120-28	s	TRANSISTOR 2SC1623-L5L6
Q123	8-729-216-22	s	TRANSISTOR 2SA1162
Q126	8-729-031-37	s	TRANSISTOR 2SC3837KT146Q
Q127	8-729-031-37	s	TRANSISTOR 2SC3837KT146Q
Q128	8-729-031-37	s	TRANSISTOR 2SC3837KT146Q
Q129	8-729-031-37	s	TRANSISTOR 2SC3837KT146Q
Q130	8-729-031-37	s	TRANSISTOR 2SC3837KT146Q
Q131	8-729-031-37	s	TRANSISTOR 2SC3837KT146Q
Q132	8-729-200-87	s	TRANSISTOR 2SC2714Y
Q133	8-729-122-63	s	TRANSISTOR 2SA1226
Q134	8-729-031-37	s	TRANSISTOR 2SC3837KT146Q
Q135	8-729-200-87	s	TRANSISTOR 2SC2714Y
Q136	8-729-122-63	s	TRANSISTOR 2SA1226

(CT-181 BOARD)

Ref. No. or Q'ty	Part No.	SP	Description
Q138	8-729-216-22	s	TRANSISTOR 2SA1162
Q139	8-729-120-28	s	TRANSISTOR 2SC1623-L5L6
Q140	8-729-120-28	s	TRANSISTOR 2SC1623-L5L6
Q141	8-729-031-37	s	TRANSISTOR 2SC3837KT146Q
Q142	8-729-031-37	s	TRANSISTOR 2SC3837KT146Q
Q144	8-766-002-43	s	TRANSISTOR SGM2016AM-T7
Q155	8-729-031-37	s	TRANSISTOR 2SC3837KT146Q
Q156	8-729-031-37	s	TRANSISTOR 2SC3837KT146Q
Q157	8-729-216-22	s	TRANSISTOR 2SA1162
Q158	8-729-029-14	s	TRANSISTOR DTC144EUA-T106
Q161	8-729-216-22	s	TRANSISTOR 2SA1162
Q162	8-729-029-14	s	TRANSISTOR DTC144EUA-T106
Q163	8-729-216-22	s	TRANSISTOR 2SA1162
Q164	8-729-029-14	s	TRANSISTOR DTC144EUA-T106
Q165	8-729-028-91	s	TRANSISTOR DTA144EUA-T106
Q166	8-729-120-28	s	TRANSISTOR 2SC1623-L5L6
Q167	8-729-028-91	s	TRANSISTOR DTA144EUA-T106
Q168	8-729-120-28	s	TRANSISTOR 2SC1623-L5L6
Q188	8-729-029-14	s	TRANSISTOR DTC144EUA-T106
Q190	8-729-028-91	s	TRANSISTOR DTA144EUA-T106
Q191	8-729-028-91	s	TRANSISTOR DTA144EUA-T106
Q2000	8-729-101-07	s	TRANSISTOR 2SB798
Q2001	8-729-807-51	s	TRANSISTOR 2SD1623-S
Q2002	8-729-101-07	s	TRANSISTOR 2SB798
Q2003	8-729-120-28	s	TRANSISTOR 2SC1623-L5L6
Q2004	8-729-120-28	s	TRANSISTOR 2SC1623-L5L6
Q2005	8-729-141-75	s	TRANSISTOR 2SD596DV345
Q2006	8-729-141-75	s	TRANSISTOR 2SD596DV345
Q2007	8-729-101-07	s	TRANSISTOR 2SB798
R522	1-216-025-11	s	METAL, CHIP 100 5% 1/10W
R523	1-216-073-00	s	METAL, CHIP 10K 5% 1/10W
R524	1-216-065-00	s	METAL, CHIP 4.7K 5% 1/10W
R525	1-216-085-00	s	METAL, CHIP 33K 5% 1/10W
R526	1-216-025-11	s	METAL, CHIP 100 5% 1/10W
R527	1-216-675-11	s	METAL, CHIP 10K 0.5% 1/10W
R528	1-216-025-11	s	METAL, CHIP 100 5% 1/10W
R529	1-216-025-11	s	METAL, CHIP 100 5% 1/10W
R530	1-216-073-00	s	METAL, CHIP 10K 5% 1/10W
R531	1-216-065-00	s	METAL, CHIP 4.7K 5% 1/10W
R532	1-216-085-00	s	METAL, CHIP 33K 5% 1/10W
R533	1-216-073-00	s	METAL, CHIP 10K 5% 1/10W
R546	1-216-061-00	s	METAL, CHIP 3.3K 5% 1/10W
R547	1-216-085-00	s	METAL, CHIP 33K 5% 1/10W
R548	1-216-057-00	s	METAL, CHIP 2.2K 5% 1/10W
R549	1-216-061-00	s	METAL, CHIP 3.3K 5% 1/10W
R550	1-216-025-11	s	METAL, CHIP 100 5% 1/10W
R551	1-216-067-00	s	METAL, CHIP 5.6K 5% 1/10W
R552	1-216-097-00	s	METAL, CHIP 100K 5% 1/10W
R553	1-216-669-11	s	METAL, CHIP 5.6K 0.5% 1/10W
R554	1-216-697-91	s	METAL, CHIP 82K 0.50% 1/10W
R555	1-216-689-11	s	METAL, CHIP 39K 0.50% 1/10W
R556	1-216-065-00	s	METAL, CHIP 4.7K 5% 1/10W
R557	1-216-689-11	s	METAL, CHIP 39K 0.50% 1/10W
R558	1-216-666-11	s	METAL, CHIP 4.3K 0.5% 1/10W
R559	1-216-073-00	s	METAL, CHIP 10K 5% 1/10W
R560	1-216-073-00	s	METAL, CHIP 10K 5% 1/10W
R567	1-216-295-11	s	CONDUCTOR, CHIP 0
R569	1-216-073-00	s	METAL, CHIP 10K 5% 1/10W
R570	1-216-065-00	s	METAL, CHIP 4.7K 5% 1/10W

(CT-181 BOARD)

Ref. No. or Q'ty	Part No.	SP	Description
R571	1-216-025-11	s	METAL, CHIP 100 5% 1/10W
R572	1-216-055-00	s	METAL, CHIP 1.8K 5% 1/10W
R573	1-216-121-91	s	METAL, CHIP 1M 5% 1/10W
R574	1-216-073-00	s	METAL, CHIP 10K 5% 1/10W
R575	1-216-067-00	s	METAL, CHIP 5.6K 5% 1/10W
R576	1-216-685-11	s	METAL, CHIP 27K 0.5% 1/10W
R577	1-216-649-11	s	METAL, CHIP 820 0.50% 1/10W
R578	1-216-647-11	s	METAL, CHIP 680 0.5% 1/10W
R579	1-216-065-00	s	METAL, CHIP 4.7K 5% 1/10W
R580	1-216-025-11	s	METAL, CHIP 100 5% 1/10W
R581	1-216-097-00	s	METAL, CHIP 100K 5% 1/10W
R582	1-216-065-00	s	METAL, CHIP 4.7K 5% 1/10W
R583	1-216-651-11	s	METAL, CHIP 1K 0.5% 1/10W
R585	1-216-651-11	s	METAL, CHIP 1K 0.5% 1/10W
R590	1-208-784-11	s	METAL, CHIP 1.2K 0.50% 1/10W
R592	1-216-659-11	s	METAL, CHIP 2.2K 0.5% 1/10W
R593	1-216-657-11	s	METAL, CHIP 1.8K 0.5% 1/10W
R594	1-216-649-11	s	METAL, CHIP 820 0.50% 1/10W
R595	1-216-678-11	s	METAL, CHIP 13K 0.50% 1/10W
R596	1-208-784-11	s	METAL, CHIP 1.2K 0.50% 1/10W
R606	1-216-621-11	s	METAL, CHIP 56 0.50% 1/10W
R607	1-216-682-11	s	METAL, CHIP 20K 0.5% 1/10W
R608	1-216-685-11	s	METAL, CHIP 27K 0.5% 1/10W
R609	1-216-649-11	s	METAL, CHIP 820 0.50% 1/10W
R610	1-216-639-11	s	METAL, CHIP 330 0.5% 1/10W
R611	1-216-619-11	s	METAL, CHIP 47 0.50% 1/10W
R612	1-216-643-11	s	METAL, CHIP 470 0.5% 1/10W
R613	1-216-643-11	s	METAL, CHIP 470 0.5% 1/10W
R614	1-216-651-11	s	METAL, CHIP 1K 0.5% 1/10W
R615	1-216-651-11	s	METAL, CHIP 1K 0.5% 1/10W
R616	1-216-073-00	s	METAL, CHIP 10K 5% 1/10W
R617	1-216-619-11	s	METAL, CHIP 47 0.50% 1/10W
R618	1-216-073-00	s	METAL, CHIP 10K 5% 1/10W
R619	1-216-619-11	s	METAL, CHIP 47 0.50% 1/10W
R620	1-216-121-91	s	METAL, CHIP 1M 5% 1/10W
R621	1-216-643-11	s	METAL, CHIP 470 0.5% 1/10W
R622	1-216-651-11	s	METAL, CHIP 1K 0.5% 1/10W
R623	1-216-636-11	s	METAL, CHIP 240 0.5% 1/10W
R624	1-208-784-11	s	METAL, CHIP 1.2K 0.50% 1/10W
R625	1-216-644-11	s	METAL, CHIP 510 0.5% 1/10W
R626	1-216-043-91	s	METAL, CHIP 560 5% 1/10W
R627	1-216-025-11	s	METAL, CHIP 100 5% 1/10W
R628	1-216-308-00	s	METAL, CHIP 4.7 5% 1/10W
R629	1-216-308-00	s	METAL, CHIP 4.7 5% 1/10W
R630	1-216-623-11	s	METAL, CHIP 68 0.50% 1/10W
R634	1-216-025-11	s	METAL, CHIP 100 5% 1/10W
R635	1-216-073-00	s	METAL, CHIP 10K 5% 1/10W
R636	1-216-667-11	s	METAL, CHIP 4.7K 0.5% 1/10W
R639	1-216-065-00	s	METAL, CHIP 4.7K 5% 1/10W
R640	1-216-651-11	s	METAL, CHIP 1K 0.5% 1/10W
R642	1-216-651-11	s	METAL, CHIP 1K 0.5% 1/10W
R643	1-216-063-00	s	METAL, CHIP 3.9K 5% 1/10W
R644	1-218-761-11	s	METAL, CHIP 240K 0.50% 1/10W
R645	1-218-756-11	s	METAL, CHIP 150K 0.50% 1/10W
R646	1-216-025-11	s	METAL, CHIP 100 5% 1/10W
R647	1-216-660-11	s	METAL, CHIP 2.4K 0.50% 1/10W
R648	1-216-033-00	s	METAL, CHIP 220 5% 1/10W
R650	1-216-667-11	s	METAL, CHIP 4.7K 0.5% 1/10W
R651	1-216-651-11	s	METAL, CHIP 1K 0.5% 1/10W

(CT-181 BOARD)

Ref. No. or Q'ty	Part No.	SP	Description
R652	1-216-047-91	s	METAL, CHIP 820 5% 1/10W
R653	1-216-627-11	s	METAL, CHIP 100 0.50% 1/10W
R655	1-216-057-00	s	METAL, CHIP 2.2K 5% 1/10W
R660	1-216-025-11	s	METAL, CHIP 100 5% 1/10W
R662	1-216-624-11	s	METAL, CHIP 75 0.50% 1/10W
R663	1-216-687-11	s	METAL, CHIP 33K 0.5% 1/10W
R664	1-216-675-11	s	METAL, CHIP 10K 0.5% 1/10W
R665	1-216-691-11	s	METAL, CHIP 47K 0.50% 1/10W
R666	1-216-657-11	s	METAL, CHIP 1.8K 0.5% 1/10W
R668	1-216-647-11	s	METAL, CHIP 680 0.5% 1/10W
R669	1-216-651-11	s	METAL, CHIP 1K 0.5% 1/10W
R670	1-216-081-00	s	METAL, CHIP 22K 5% 1/10W
R671	1-216-063-00	s	METAL, CHIP 3.9K 5% 1/10W
R672	1-216-073-00	s	METAL, CHIP 10K 5% 1/10W
R673	1-216-619-11	s	METAL, CHIP 47 0.50% 1/10W
R674	1-216-651-11	s	METAL, CHIP 1K 0.5% 1/10W
R675	1-216-065-00	s	METAL, CHIP 4.7K 5% 1/10W
R677	1-216-651-11	s	METAL, CHIP 1K 0.5% 1/10W
R679	1-216-658-11	s	METAL, CHIP 2K 0.5% 1/10W
R680	1-216-295-11	s	CONDUCTOR, CHIP 0
R681	1-216-657-11	s	METAL, CHIP 1.8K 0.5% 1/10W
R683	1-216-675-11	s	METAL, CHIP 10K 0.5% 1/10W
R684	1-216-097-00	s	METAL, CHIP 100K 5% 1/10W
R685	1-216-624-11	s	METAL, CHIP 75 0.50% 1/10W
R696	1-216-663-11	s	METAL, CHIP 3.3K 0.5% 1/10W
R755	1-216-669-11	s	METAL, CHIP 5.6K 0.5% 1/10W
R756	1-216-627-11	s	METAL, CHIP 100 0.50% 1/10W
R757	1-216-665-11	s	METAL, CHIP 3.9K 0.5% 1/10W
R758	1-216-679-11	s	METAL, CHIP 15K 0.5% 1/10W
R759	1-216-649-11	s	METAL, CHIP 820 0.50% 1/10W
R760	1-216-611-11	s	METAL, CHIP 22 0.50% 1/10W
R761	1-216-675-11	s	METAL, CHIP 10K 0.5% 1/10W
R762	1-216-675-11	s	METAL, CHIP 10K 0.5% 1/10W
R763	1-216-121-91	s	METAL, CHIP 1M 5% 1/10W
R764	1-216-675-11	s	METAL, CHIP 10K 0.5% 1/10W
R765	1-216-081-00	s	METAL, CHIP 22K 5% 1/10W
R766	1-216-057-00	s	METAL, CHIP 2.2K 5% 1/10W
R767	1-216-669-11	s	METAL, CHIP 5.6K 0.5% 1/10W
R770	1-216-675-11	s	METAL, CHIP 10K 0.5% 1/10W
R771	1-216-081-00	s	METAL, CHIP 22K 5% 1/10W
R772	1-216-679-11	s	METAL, CHIP 15K 0.5% 1/10W
R774	1-216-081-00	s	METAL, CHIP 22K 5% 1/10W
R775	1-216-057-00	s	METAL, CHIP 2.2K 5% 1/10W
R778	1-216-665-11	s	METAL, CHIP 3.9K 0.5% 1/10W
R779	1-216-081-00	s	METAL, CHIP 22K 5% 1/10W
R780	1-216-077-00	s	METAL, CHIP 15K 5% 1/10W
R781	1-216-081-00	s	METAL, CHIP 22K 5% 1/10W
R782	1-216-081-00	s	METAL, CHIP 22K 5% 1/10W
R801	1-216-025-11	s	METAL, CHIP 100 5% 1/10W
R802	1-216-025-11	s	METAL, CHIP 100 5% 1/10W
R803	1-216-065-00	s	METAL, CHIP 4.7K 5% 1/10W
R804	1-216-641-11	s	METAL, CHIP 390 0.5% 1/10W
R805	1-216-651-11	s	METAL, CHIP 1K 0.5% 1/10W
R806	1-216-689-11	s	METAL, CHIP 39K 0.50% 1/10W
R807	1-216-624-11	s	METAL, CHIP 75 0.50% 1/10W
R808	1-216-121-91	s	METAL, CHIP 1M 5% 1/10W
R1000	1-216-049-91	s	METAL, CHIP 1K 5% 1/10W
R1001	1-216-049-91	s	METAL, CHIP 1K 5% 1/10W
R1002	1-216-049-91	s	METAL, CHIP 1K 5% 1/10W

(CT-181 BOARD)

Ref. No. or Q'ty	Part No.	SP	Description
R1003	1-216-049-91	s	METAL, CHIP 1K 5% 1/10W
R1004	1-216-049-91	s	METAL, CHIP 1K 5% 1/10W
R1005	1-216-049-91	s	METAL, CHIP 1K 5% 1/10W
R1006	1-216-085-00	s	METAL, CHIP 33K 5% 1/10W
R1007	1-216-085-00	s	METAL, CHIP 33K 5% 1/10W
R1008	1-216-085-00	s	METAL, CHIP 33K 5% 1/10W
R1009	1-216-085-00	s	METAL, CHIP 33K 5% 1/10W
R1010	1-216-049-91	s	METAL, CHIP 1K 5% 1/10W
R1011	1-216-085-00	s	METAL, CHIP 33K 5% 1/10W
R1012	1-216-097-00	s	METAL, CHIP 100K 5% 1/10W
R1019	1-216-085-00	s	METAL, CHIP 33K 5% 1/10W
R1020	1-216-061-00	s	METAL, CHIP 3.3K 5% 1/10W
R1021	1-216-049-91	s	METAL, CHIP 1K 5% 1/10W
R1022	1-216-025-11	s	METAL, CHIP 100 5% 1/10W
R1025	1-216-025-11	s	METAL, CHIP 100 5% 1/10W
R1026	1-216-025-11	s	METAL, CHIP 100 5% 1/10W
R1027	1-216-025-11	s	METAL, CHIP 100 5% 1/10W
R1028	1-216-025-11	s	METAL, CHIP 100 5% 1/10W
R1029	1-216-295-11	s	CONDUCTOR, CHIP 0
R1030	1-216-061-00	s	METAL, CHIP 3.3K 5% 1/10W
R1031	1-216-049-91	s	METAL, CHIP 1K 5% 1/10W
R1032	1-216-025-11	s	METAL, CHIP 100 5% 1/10W
R1033	1-216-085-00	s	METAL, CHIP 33K 5% 1/10W
R1035	1-216-121-91	s	METAL, CHIP 1M 5% 1/10W
R1037	1-216-025-11	s	METAL, CHIP 100 5% 1/10W
R1039	1-216-025-11	s	METAL, CHIP 100 5% 1/10W
R1040	1-216-097-00	s	METAL, CHIP 100K 5% 1/10W
R1041	1-216-097-00	s	METAL, CHIP 100K 5% 1/10W
R1042	1-216-097-00	s	METAL, CHIP 100K 5% 1/10W
R1043	1-216-097-00	s	METAL, CHIP 100K 5% 1/10W
R1044	1-216-097-00	s	METAL, CHIP 100K 5% 1/10W
R1045	1-216-097-00	s	METAL, CHIP 100K 5% 1/10W
R1046	1-216-097-00	s	METAL, CHIP 100K 5% 1/10W
R1047	1-216-097-00	s	METAL, CHIP 100K 5% 1/10W
R1048	1-216-121-91	s	METAL, CHIP 1M 5% 1/10W
R1049	1-216-097-00	s	METAL, CHIP 100K 5% 1/10W
R1050	1-216-121-91	s	METAL, CHIP 1M 5% 1/10W
R1051	1-216-025-11	s	METAL, CHIP 100 5% 1/10W
R1052	1-216-025-11	s	METAL, CHIP 100 5% 1/10W
R1053	1-216-097-00	s	METAL, CHIP 100K 5% 1/10W
R2000	1-216-063-00	s	METAL, CHIP 3.9K 5% 1/10W
R2001	1-216-055-00	s	METAL, CHIP 1.8K 5% 1/10W
R2002	1-216-055-00	s	METAL, CHIP 1.8K 5% 1/10W
R2003	1-216-055-00	s	METAL, CHIP 1.8K 5% 1/10W
R2004	1-216-073-00	s	METAL, CHIP 10K 5% 1/10W
R2005	1-216-677-11	s	METAL, CHIP 12K 0.5% 1/10W
R2006	1-216-067-00	s	METAL, CHIP 5.6K 5% 1/10W
R2007	1-216-073-00	s	METAL, CHIP 10K 5% 1/10W
R2008	1-216-683-11	s	METAL, CHIP 22K 0.50% 1/10W
R2009	1-216-683-11	s	METAL, CHIP 22K 0.50% 1/10W
R2010	1-216-677-11	s	METAL, CHIP 12K 0.5% 1/10W
R2011	1-216-679-11	s	METAL, CHIP 15K 0.5% 1/10W
R2012	1-216-073-00	s	METAL, CHIP 10K 5% 1/10W
R2013	1-216-049-91	s	METAL, CHIP 1K 5% 1/10W
R2014	1-216-049-91	s	METAL, CHIP 1K 5% 1/10W
R2015	1-216-079-00	s	METAL, CHIP 18K 5% 1/10W
R2016	1-216-079-00	s	METAL, CHIP 18K 5% 1/10W
R2017	1-216-049-91	s	METAL, CHIP 1K 5% 1/10W
R2018	1-216-057-00	s	METAL, CHIP 2.2K 5% 1/10W

(CT-181 BOARD)

Ref. No. or Q'ty	Part No.	SP	Description
R2019	1-216-089-91	s	METAL, CHIP 47k 5% 1/10W
R2020	1-216-049-91	s	METAL, CHIP 1K 5% 1/10W
R2021	1-216-057-00	s	METAL, CHIP 2.2K 5% 1/10W
R2022	1-216-089-91	s	METAL, CHIP 47k 5% 1/10W
R2023	1-216-077-00	s	METAL, CHIP 15K 5% 1/10W
R2024	1-216-077-00	s	METAL, CHIP 15K 5% 1/10W
R2025	1-216-049-91	s	METAL, CHIP 1K 5% 1/10W
R2026	1-216-049-91	s	METAL, CHIP 1K 5% 1/10W
R2027	1-216-089-91	s	METAL, CHIP 47k 5% 1/10W
R2028	1-216-089-91	s	METAL, CHIP 47k 5% 1/10W
R2031	1-216-049-91	s	METAL, CHIP 1K 5% 1/10W
R2032	1-216-049-91	s	METAL, CHIP 1K 5% 1/10W
R2033	1-216-619-11	s	METAL, CHIP 47 0.50% 1/10W
R2034	1-216-085-00	s	METAL, CHIP 33K 5% 1/10W
R2035	1-216-049-91	s	METAL, CHIP 1K 5% 1/10W
R2036	1-216-085-00	s	METAL, CHIP 33K 5% 1/10W
R2037	1-216-049-91	s	METAL, CHIP 1K 5% 1/10W
R2038	1-216-075-00	s	METAL, CHIP 12K 5% 1/10W
R2039	1-216-067-00	s	METAL, CHIP 5.6K 5% 1/10W
RB1001	1-239-309-11	s	RESISTOR BLOCK, CHIP 100KX8
RB1002	1-239-309-11	s	RESISTOR BLOCK, CHIP 100KX8
RB1003	1-239-309-11	s	RESISTOR BLOCK, CHIP 100KX8
RB1004	1-239-309-11	s	RESISTOR BLOCK, CHIP 100KX8
RB1005	1-239-308-11	s	RESISTOR BLOCK, CHIP 47KX8
RB1006	1-239-308-11	s	RESISTOR BLOCK, CHIP 47KX8
RB1007	1-236-904-11	s	RESISTOR BLOCK, CHIP 1KX4
RB1008	1-236-904-11	s	RESISTOR BLOCK, CHIP 1KX4
RB1009	1-236-904-11	s	RESISTOR BLOCK, CHIP 1KX4
RB1010	1-236-904-11	s	RESISTOR BLOCK, CHIP 1KX4
RB1011	1-236-904-11	s	RESISTOR BLOCK, CHIP 1KX4
RB1012	1-236-904-11	s	RESISTOR BLOCK, CHIP 1KX4
RB1013	1-236-904-11	s	RESISTOR BLOCK, CHIP 1KX4
RB1014	1-236-904-11	s	RESISTOR BLOCK, CHIP 1KX4
RB1015	1-239-309-11	s	RESISTOR BLOCK, CHIP 100KX8
RB1016	1-239-309-11	s	RESISTOR BLOCK, CHIP 100KX8
RB1017	1-239-309-11	s	RESISTOR BLOCK, CHIP 100KX8
RV19	1-228-458-00	s	RES, ADJ METAL 5K
RV20	1-228-455-00	s	RES, ADJ METAL 500
RV21	1-228-466-00	s	RES, ADJ, METAL 2M
RV22	1-228-460-00	s	RES, ADJ, METAL 20K
RV23	1-228-456-00	s	RES, ADJ, METAL 1K
S1000	1-570-598-11	s	SWITCH, DIP 4-CKT
S1001	1-572-634-11	s	SWITCH, SLIDE
S1002	1-572-634-11	s	SWITCH, SLIDE
S1004	1-570-621-11	s	SWITCH, DIP 6-CKT
S2002	1-570-839-11	s	SWITCH, SLIDE
S2011	1-572-634-11	s	SWITCH, SLIDE
S2012	1-572-634-11	s	SWITCH, SLIDE
S2013	1-572-634-11	s	SWITCH, SLIDE
S2014	1-572-634-11	s	SWITCH, SLIDE
SW1000	1-762-117-11	s	SWITCH, ROTARY
SW1001	1-762-117-11	s	SWITCH, ROTARY
SWF1	1-404-706-11	s	RESONATOR, SAW
T2000	1-426-994-21	s	TRANSFORMER, DC-DC CONVERTER
W1	1-957-711-11	o	HARNESS, SUB (RET RF)
W2	1-957-712-11	o	HARNESS, SUB (PROMPT RF)

(CT-181 BOARD)

Ref. No. or Q'ty	Part No.	SP	Description
X1000	1-760-464-11	s	CRYSTAL 4.9152MHz
X1001	1-760-273-11	s	CRYSTAL 20MHz

DU-33 BOARD

S/N 10601 and higher[for UC]
S/N 30061 and higher[for J]
S/N 40251 and higher[for CE]

Ref. No. or Q'ty	Part No.	SP	Description
1pc	A-8319-157-A	o	MOUNTED CIRCUIT BOARD, DU-33
C1	1-104-851-11	s	TANTALUM, CHIP 10uF 20% 10V
C2	1-164-156-11	s	CERAMIC, CHIP 0.1uF 25V
C3	1-162-964-11	s	CERAMIC, CHIP 0.001uF 10% 50V
C4	1-164-156-11	s	CERAMIC, CHIP 0.1uF 25V
C5	1-164-156-11	s	CERAMIC, CHIP 0.1uF 25V
C6	1-162-908-11	s	CERAMIC, CHIP 3PF 50V
C7	1-164-156-11	s	CERAMIC, CHIP 0.1uF 25V
C8	1-104-851-11	s	TANTALUM, CHIP 10uF 20% 10V
C9	1-164-156-11	s	CERAMIC, CHIP 0.1uF 25V
C10	1-104-851-11	s	TANTALUM, CHIP 10uF 20% 10V
CN1	1-764-093-21	o	PIN, CONNECTOR (PC BOARD) 8P
IC1	8-759-497-85	s	IC QL12X16B-XPF100C-D30WS
IC2	8-759-035-90	s	IC TC7S02F
L1	1-410-385-11	s	INDUCTOR, CHIP 22uH
L2	1-410-385-11	s	INDUCTOR, CHIP 22uH
L3	1-410-385-11	s	INDUCTOR, CHIP 22uH
Q1	8-729-402-78	s	TRANSISTOR XN6401
Q2	8-729-402-19	s	TRANSISTOR XN6501
Q3	8-729-026-53	s	TRANSISTOR 2SA1576A-T106-QR
Q4	8-729-905-35	s	TRANSISTOR 2SC4081-R
R1	1-216-821-11	s	METAL, CHIP 1K 5% 1/16W
R2	1-216-821-11	s	METAL, CHIP 1K 5% 1/16W
R3	1-216-857-11	s	METAL, CHIP 1M 5% 1/16W
R4	1-216-809-11	s	METAL, CHIP 100 5% 1/16W
R5	1-216-809-11	s	METAL, CHIP 100 5% 1/16W
R7	1-216-833-91	s	METAL, CHIP 10K 5% 1/16W
R10	1-218-866-11	s	METAL, CHIP 6.2K 0.50% 1/16W
R11	1-218-866-11	s	METAL, CHIP 6.2K 0.50% 1/16W
R12	1-218-866-11	s	METAL, CHIP 6.2K 0.50% 1/16W
R13	1-216-829-11	s	METAL, CHIP 4.7K 5% 1/16W
R14	1-218-866-11	s	METAL, CHIP 6.2K 0.50% 1/16W
R15	1-218-866-11	s	METAL, CHIP 6.2K 0.50% 1/16W
R17	1-216-829-11	s	METAL, CHIP 4.7K 5% 1/16W
R20	1-216-809-11	s	METAL, CHIP 100 5% 1/16W
R21	1-216-829-11	s	METAL, CHIP 4.7K 5% 1/16W
S1	1-572-272-31	s	SWITCH, SLIDE
RV1	1-237-034-11	s	RES, ADJ METAL 2K

ES-20/20P BOARD[board suffix -11]

Ref. No. or Q'ty	Part No.	SP	Description
1pc	A-8315-061-A	o	MOUNTED CIRCUIT BOARD, ES-20 [for J]
1pc	A-8315-041-A	o	MOUNTED CIRCUIT BOARD, ES-20 [for UC]
1pc	A-8315-066-A	o	MOUNTED CIRCUIT BOARD, ES-20 [for CE]
1pc	2-251-622-01	o	LEVER, PC BOARD
1pc	7-682-903-01	s	SCREW +PWH 3X5
3pcs	7-627-554-28	s	SCREW, PRECISION +P 2X5 TYPE1
1pc	1-562-579-21	s	PLUG, SHORTING
C1	1-104-851-11	s	TANTALUM, CHIP 10uF 20% 10V
C2	1-113-985-11	s	TANTALUM 10uF 20% 20V
C3	1-163-038-91	s	CERAMIC 0.1uF 25V
C4	1-126-391-11	s	ELECT, CHIP 47uF 20% 6.3V
C5	1-128-453-21	s	ELECT 47uF 20% 6.3V
C6	1-163-251-11	s	CERAMIC, CHIP 100PF 5% 50V
C7	1-163-231-11	s	CERAMIC 15PF 5% 50V
C8	1-163-038-91	s	CERAMIC 0.1uF 25V
C9	1-126-394-11	s	ELECT, CHIP 10uF 20% 16V
C10	1-113-991-11	s	TANTALUM 33uF 20% 16V
C11	1-163-113-00	s	CERAMIC, CHIP 68PF 5% 50V [for J, UC]
C11	1-163-239-11	s	CERAMIC, CHIP 33PF 5% 50V [for CE]
C12	1-135-073-00	s	TANTALUM, CHIP 0.33uF 10% 35V
C13	1-163-241-11	s	CERAMIC, CHIP 39PF 5% 50V
C14	1-163-038-91	s	CERAMIC 0.1uF 25V
C15	1-163-038-91	s	CERAMIC 0.1uF 25V
C16	1-135-210-11	s	TANTALUM 4.7uF 10% 10V
C17	1-164-232-11	s	CERAMIC, CHIP 0.01uF 10% 50V
C18	1-163-038-91	s	CERAMIC 0.1uF 25V
C19	1-163-038-91	s	CERAMIC 0.1uF 25V
C20	1-126-391-11	s	ELECT, CHIP 47uF 20% 6.3V
C21	1-163-038-91	s	CERAMIC 0.1uF 25V
C22	1-163-257-11	s	CERAMIC 180PF 5% 50V
C23	1-163-127-00	s	CERAMIC, CHIP 270PF 5% 50V
C27	1-163-235-11	s	CERAMIC, CHIP 22PF 5% 50V
C29	1-163-135-00	s	CERAMIC, CHIP 560PF 5% 50V
C32	1-163-133-00	s	CERAMIC, CHIP 470PF 5% 50V
C33	1-164-161-11	s	CERAMIC, CHIP 0.0022uF 10% 100V
C34	1-104-851-11	s	TANTALUM, CHIP 10uF 20% 10V
C35	1-163-038-91	s	CERAMIC 0.1uF 25V
C36	1-163-259-91	s	CERAMIC 220PF 5% 50V
C37	1-163-019-00	s	CERAMIC, CHIP 0.0068uF 10% 50V
C38	1-104-851-11	s	TANTALUM, CHIP 10uF 20% 10V
C39	1-135-070-00	s	TANTALUM, CHIP 0.1uF 10% 35V
C40	1-163-253-11	s	CERAMIC 120PF 5% 50V
C41	1-163-251-11	s	CERAMIC, CHIP 100PF 5% 50V
C42	1-163-241-11	s	CERAMIC, CHIP 39PF 5% 50V
C43	1-163-087-00	s	CERAMIC, CHIP 4PF 50V
C44	1-163-239-11	s	CERAMIC, CHIP 33PF 5% 50V
C45	1-126-391-11	s	ELECT, CHIP 47uF 20% 6.3V
C46	1-163-038-91	s	CERAMIC 0.1uF 25V
C47	1-126-391-11	s	ELECT, CHIP 47uF 20% 6.3V
C48	1-163-038-91	s	CERAMIC 0.1uF 25V
C49	1-163-241-11	s	CERAMIC, CHIP 39PF 5% 50V
C51	1-163-099-00	s	CERAMIC, CHIP 18PF 5% 50V [for J, UC]
C51	1-163-239-11	s	CERAMIC, CHIP 33PF 5% 50V [for CE]
C52	1-163-253-11	s	CERAMIC 120PF 5% 50V [for J, UC]

(ES-20/20P BOARD[board suffix -11])

Ref. No. or Q'ty	Part No.	SP	Description
C52	1-163-127-00	s	CERAMIC, CHIP 270PF 5% 50V [for CE]
C55	1-163-251-11	s	CERAMIC, CHIP 100PF 5% 50V
C56	1-113-985-11	s	TANTALUM 10uF 20% 20V
C57	1-163-231-11	s	CERAMIC 15PF 5% 50V
C58	1-164-232-11	s	CERAMIC, CHIP 0.01uF 10% 50V
C59	1-126-393-11	s	ELECT 33uF 20% 10V
C60	1-163-038-91	s	CERAMIC 0.1uF 25V
C61	1-163-038-91	s	CERAMIC 0.1uF 25V
C62	1-104-851-11	s	TANTALUM, CHIP 10uF 20% 10V
C63	1-135-091-00	s	TANTALUM, CHIP 1uF 20% 16V
C64	1-164-232-11	s	CERAMIC, CHIP 0.01uF 10% 50V
C65	1-164-232-11	s	CERAMIC, CHIP 0.01uF 10% 50V
C66	1-126-395-11	s	ELECT, CHIP 22uF 20% 16V
C67	1-126-395-11	s	ELECT, CHIP 22uF 20% 16V
C68	1-104-851-11	s	TANTALUM, CHIP 10uF 20% 10V
C69	1-164-232-11	s	CERAMIC, CHIP 0.01uF 10% 50V
C70	1-135-210-11	s	TANTALUM 4.7uF 10% 10V
C71	1-113-642-11	s	TANTALUM 47uF 20% 10V
C72	1-104-851-11	s	TANTALUM, CHIP 10uF 20% 10V
C73	1-164-232-11	s	CERAMIC, CHIP 0.01uF 10% 50V
C74	1-104-851-11	s	TANTALUM, CHIP 10uF 20% 10V
C75	1-163-038-91	s	CERAMIC 0.1uF 25V
C76	1-163-038-91	s	CERAMIC 0.1uF 25V
C77	1-163-038-91	s	CERAMIC 0.1uF 25V
C78	1-104-851-11	s	TANTALUM, CHIP 10uF 20% 10V
C79	1-164-232-11	s	CERAMIC, CHIP 0.01uF 10% 50V
C80	1-163-038-91	s	CERAMIC 0.1uF 25V
C81	1-113-994-11	s	TANTALUM 6.8uF 20% 16V
C82	1-163-038-91	s	CERAMIC 0.1uF 25V
C83	1-163-235-11	s	CERAMIC, CHIP 22PF 5% 50V
C84	1-163-038-91	s	CERAMIC 0.1uF 25V
C85	1-163-038-91	s	CERAMIC 0.1uF 25V
C86	1-113-994-11	s	TANTALUM 6.8uF 20% 16V
C87	1-163-235-11	s	CERAMIC, CHIP 22PF 5% 50V
C88	1-163-038-91	s	CERAMIC 0.1uF 25V
C89	1-163-135-00	s	CERAMIC, CHIP 560PF 5% 50V
C90	1-104-850-11	s	TANTALUM 6.8uF 20% 10V
C91	1-163-038-91	s	CERAMIC 0.1uF 25V
C92	1-163-038-91	s	CERAMIC 0.1uF 25V
C93	1-163-038-91	s	CERAMIC 0.1uF 25V
C94	1-163-038-91	s	CERAMIC 0.1uF 25V
C95	1-163-243-11	s	CERAMIC, CHIP 47PF 5% 50V
C96	1-163-038-91	s	CERAMIC 0.1uF 25V
C97	1-163-038-91	s	CERAMIC 0.1uF 25V
C98	1-163-038-91	s	CERAMIC 0.1uF 25V
C99	1-163-038-91	s	CERAMIC 0.1uF 25V
C100	1-163-038-91	s	CERAMIC 0.1uF 25V
C101	1-113-642-11	s	TANTALUM 47uF 20% 10V
C102	1-127-531-11	s	ELECT 20 16V
C103	1-113-642-11	s	TANTALUM 47uF 20% 10V
C104	1-113-577-11	s	ELECT SOLID 47uF 20% 16V
C105	1-113-500-11	s	TANTALUM 100uF 20% 10V
C106	1-113-642-11	s	TANTALUM 47uF 20% 10V
C107	1-163-133-00	s	CERAMIC, CHIP 470PF 5% 50V
C108	1-163-251-11	s	CERAMIC, CHIP 100PF 5% 50V
C109	1-163-121-00	s	CERAMIC, CHIP 150PF 5% 50V
C110	1-104-851-11	s	TANTALUM, CHIP 10uF 20% 10V
C111	1-113-577-11	s	ELECT SOLID 47uF 20% 16V

(ES-20/20P BOARD[board suffix -11])

Ref. No. or Q'ty	Part No.	SP	Description
C112	1-113-500-11	s	TANTALUM 100uF 20% 10V
C113	1-113-500-11	s	TANTALUM 100uF 20% 10V
C114	1-113-642-11	s	TANTALUM 47uF 20% 10V
C115	1-113-500-11	s	TANTALUM 100uF 20% 10V
C116	1-113-500-11	s	TANTALUM 100uF 20% 10V
C117	1-113-500-11	s	TANTALUM 100uF 20% 10V
C500	1-104-608-11	s	ELECT 33uF 20% 6.3V
C501	1-126-391-11	s	ELECT, CHIP 47uF 20% 6.3V
C502	1-163-038-91	s	CERAMIC 0.1uF 25V
C503	1-126-391-11	s	ELECT, CHIP 47uF 20% 6.3V
C504	1-163-038-91	s	CERAMIC 0.1uF 25V
C505	1-163-227-11	s	CERAMIC, CHIP 10PF 5% 50V
C507	1-126-391-11	s	ELECT, CHIP 47uF 20% 6.3V
C508	1-126-391-11	s	ELECT, CHIP 47uF 20% 6.3V
C509	1-163-038-91	s	CERAMIC 0.1uF 25V
C510	1-126-391-11	s	ELECT, CHIP 47uF 20% 6.3V
C511	1-163-038-91	s	CERAMIC 0.1uF 25V
C513	1-128-594-11	s	ELECT, NONPOLAR 1uF 20% 50V
C515	1-163-038-91	s	CERAMIC 0.1uF 25V
C516	1-104-913-11	s	TANTALUM, CHIP 10uF 20% 16V
C517	1-163-235-11	s	CERAMIC, CHIP 22PF 5% 50V
C518	1-163-235-11	s	CERAMIC, CHIP 22PF 5% 50V
C519	1-163-235-11	s	CERAMIC, CHIP 22PF 5% 50V
C520	1-126-391-11	s	ELECT, CHIP 47uF 20% 6.3V
C521	1-163-038-91	s	CERAMIC 0.1uF 25V
C522	1-126-391-11	s	ELECT, CHIP 47uF 20% 6.3V
C523	1-163-038-91	s	CERAMIC 0.1uF 25V
C524	1-163-099-00	s	CERAMIC, CHIP 18PF 5% 50V
C525	1-163-121-00	s	CERAMIC, CHIP 150PF 5% 50V
C530	1-163-038-91	s	CERAMIC 0.1uF 25V
C531	1-163-038-91	s	CERAMIC 0.1uF 25V
C532	1-104-913-11	s	TANTALUM, CHIP 10uF 20% 16V
C533	1-104-852-11	s	TANTALUM, CHIP 22uF 20% 10V
C534	1-163-038-91	s	CERAMIC 0.1uF 25V
C535	1-104-852-11	s	TANTALUM, CHIP 22uF 20% 10V
C536	1-126-396-11	s	ELECT, CHIP 47uF 20% 16V
C537	1-163-038-91	s	CERAMIC 0.1uF 25V
C538	1-126-396-11	s	ELECT, CHIP 47uF 20% 16V
C539	1-163-038-91	s	CERAMIC 0.1uF 25V
C540	1-164-232-11	s	CERAMIC, CHIP 0.01uF 10% 50V
C541	1-164-232-11	s	CERAMIC, CHIP 0.01uF 10% 50V
C542	1-104-608-11	s	ELECT 33uF 20% 6.3V
C550	1-163-038-91	s	CERAMIC 0.1uF 25V
C551	1-163-229-11	s	CERAMIC 12PF 5% 50V
C552	1-126-391-11	s	ELECT, CHIP 47uF 20% 6.3V
C553	1-163-038-91	s	CERAMIC 0.1uF 25V
C554	1-135-259-11	s	TANTALUM 10uF 20% 6.3V
C555	1-163-217-11	s	CERAMIC 1PF 0.25PF 50V
C556	1-163-038-91	s	CERAMIC 0.1uF 25V
C557	1-126-391-11	s	ELECT, CHIP 47uF 20% 6.3V
C558	1-135-259-11	s	TANTALUM 10uF 20% 6.3V
C559	1-163-038-91	s	CERAMIC 0.1uF 25V
C560	1-135-259-11	s	TANTALUM 10uF 20% 6.3V
C561	1-163-091-00	s	CERAMIC, CHIP 8PF 50V
C562	1-126-391-11	s	ELECT, CHIP 47uF 20% 6.3V
C563	1-163-224-11	s	CERAMIC, CHIP 7PF 0.25PF 50V
C564	1-163-038-91	s	CERAMIC 0.1uF 25V
C565	1-135-259-11	s	TANTALUM 10uF 20% 6.3V
C566	1-163-038-91	s	CERAMIC 0.1uF 25V

(ES-20/20P BOARD[board suffix -11])

Ref. No. or Q'ty	Part No.	SP	Description
C567	1-126-391-11	s	ELECT, CHIP 47uF 20% 6.3V
C568	1-135-259-11	s	TANTALUM 10uF 20% 6.3V
C569	1-163-038-91	s	CERAMIC 0.1uF 25V
C570	1-135-259-11	s	TANTALUM 10uF 20% 6.3V
C571	1-163-091-00	s	CERAMIC, CHIP 8PF 50V
C572	1-126-391-11	s	ELECT, CHIP 47uF 20% 6.3V
C573	1-163-038-91	s	CERAMIC 0.1uF 25V
C574	1-163-220-11	s	CERAMIC 3PF 0.25PF 50V
C575	1-135-259-11	s	TANTALUM 10uF 20% 6.3V
C576	1-163-038-91	s	CERAMIC 0.1uF 25V
C577	1-126-391-11	s	ELECT, CHIP 47uF 20% 6.3V
C578	1-135-259-11	s	TANTALUM 10uF 20% 6.3V
C579	1-163-038-91	s	CERAMIC 0.1uF 25V
C580	1-135-259-11	s	TANTALUM 10uF 20% 6.3V
C581	1-163-263-11	s	CERAMIC, CHIP 330PF 5% 50V
C582	1-163-133-00	s	CERAMIC, CHIP 470PF 5% 50V
C583	1-163-249-11	s	CERAMIC, CHIP 82PF 5% 50V
C584	1-128-594-11	s	ELECT, NONPOLAR 1uF 20% 50V
C585	1-128-594-11	s	ELECT, NONPOLAR 1uF 20% 50V
C586	1-113-642-11	s	TANTALUM 47uF 20% 10V
C587	1-113-642-11	s	TANTALUM 47uF 20% 10V
C588	1-113-642-11	s	TANTALUM 47uF 20% 10V
C589	1-113-642-11	s	TANTALUM 47uF 20% 10V
C590	1-163-038-91	s	CERAMIC 0.1uF 25V
C591	1-163-038-91	s	CERAMIC 0.1uF 25V
C592	1-104-752-11	s	TANTALUM, CHIP 33uF 20% 6.3V
C593	1-104-752-11	s	TANTALUM, CHIP 33uF 20% 6.3V
C800	1-126-391-11	s	ELECT, CHIP 47uF 20% 6.3V
C801	1-126-390-11	s	ELECT, CHIP 22uF 20% 6.3V
C802	1-163-038-91	s	CERAMIC 0.1uF 25V
C803	1-163-038-91	s	CERAMIC 0.1uF 25V
C805	1-163-089-00	s	CERAMIC, CHIP 6PF 50V [for J, UC]
C805	1-163-231-11	s	CERAMIC 15PF 5% 50V [for CE]
C806	1-163-239-11	s	CERAMIC, CHIP 33PF 5% 50V [for J, UC]
C806	1-163-113-00	s	CERAMIC, CHIP 68PF 5% 50V [for CE]
C807	1-163-087-00	s	CERAMIC, CHIP 4PF 50V
C809	1-163-087-00	s	CERAMIC, CHIP 4PF 50V
C813	1-163-089-00	s	CERAMIC, CHIP 6PF 50V [for J, UC]
C813	1-163-231-11	s	CERAMIC 15PF 5% 50V [for CE]
C814	1-163-239-11	s	CERAMIC, CHIP 33PF 5% 50V [for J, UC]
C814	1-163-113-00	s	CERAMIC, CHIP 68PF 5% 50V [for CE]
C821	1-163-038-91	s	CERAMIC 0.1uF 25V
C822	1-126-390-11	s	ELECT, CHIP 22uF 20% 6.3V
C823	1-126-393-11	s	ELECT 33uF 20% 10V
C824	1-126-390-11	s	ELECT, CHIP 22uF 20% 6.3V
C825	1-163-038-91	s	CERAMIC 0.1uF 25V
C826	1-163-038-91	s	CERAMIC 0.1uF 25V
C828	1-163-235-11	s	CERAMIC, CHIP 22PF 5% 50V
C829	1-163-239-11	s	CERAMIC, CHIP 33PF 5% 50V
C830	1-163-239-11	s	CERAMIC, CHIP 33PF 5% 50V
C831	1-163-038-91	s	CERAMIC 0.1uF 25V
C832	1-126-394-11	s	ELECT, CHIP 10uF 20% 16V
C833	1-163-251-11	s	CERAMIC, CHIP 100PF 5% 50V
C834	1-135-145-11	s	TANTALUM, CHIP 0.47uF 10% 35V
C835	1-126-394-11	s	ELECT, CHIP 10uF 20% 16V
C836	1-104-851-11	s	TANTALUM, CHIP 10uF 20% 10V
C837	1-104-851-11	s	TANTALUM, CHIP 10uF 20% 10V

(ES-20/20P BOARD[board suffix -11])

Ref. No. or Q'ty	Part No.	SP	Description
C839	1-163-239-11	s	CERAMIC, CHIP 33PF 5% 50V
C840	1-163-239-11	s	CERAMIC, CHIP 33PF 5% 50V
C841	1-163-038-91	s	CERAMIC 0.1uF 25V
C842	1-126-394-11	s	ELECT, CHIP 10uF 20% 16V
C843	1-135-145-11	s	TANTALUM, CHIP 0.47uF 10% 35V
C844	1-163-251-11	s	CERAMIC, CHIP 100PF 5% 50V
C845	1-126-394-11	s	ELECT, CHIP 10uF 20% 16V
C846	1-126-393-11	s	ELECT 33uF 20% 10V
C847	1-163-038-91	s	CERAMIC 0.1uF 25V
C848	1-163-038-91	s	CERAMIC 0.1uF 25V
C849	1-126-390-11	s	ELECT, CHIP 22uF 20% 6.3V
C850	1-126-394-11	s	ELECT, CHIP 10uF 20% 16V [for CE]
C851	1-163-038-91	s	CERAMIC 0.1uF 25V
C852	1-126-390-11	s	ELECT, CHIP 22uF 20% 6.3V
C853	1-164-232-11	s	CERAMIC, CHIP 0.01uF 10% 50V
C854	1-164-232-11	s	CERAMIC, CHIP 0.01uF 10% 50V
C855	1-163-089-00	s	CERAMIC, CHIP 6PF 50V [for J, UC]
C855	1-163-227-11	s	CERAMIC, CHIP 10PF 5% 50V [for CE]
C856	1-164-232-11	s	CERAMIC, CHIP 0.01uF 10% 50V
C857	1-163-235-11	s	CERAMIC, CHIP 22PF 5% 50V [for J, UC]
C857	1-163-099-00	s	CERAMIC, CHIP 18PF 5% 50V [for CE]
C858	1-163-038-91	s	CERAMIC 0.1uF 25V
C859	1-163-038-91	s	CERAMIC 0.1uF 25V
C860	1-126-393-11	s	ELECT 33uF 20% 10V
C861	1-163-087-00	s	CERAMIC, CHIP 4PF 50V
C862	1-104-913-11	s	TANTALUM, CHIP 10uF 20% 16V
C863	1-126-391-11	s	ELECT, CHIP 47uF 20% 6.3V
C864	1-126-391-11	s	ELECT, CHIP 47uF 20% 6.3V
C865	1-163-038-91	s	CERAMIC 0.1uF 25V
C866	1-163-038-91	s	CERAMIC 0.1uF 25V
C867	1-164-232-11	s	CERAMIC, CHIP 0.01uF 10% 50V
C868	1-164-232-11	s	CERAMIC, CHIP 0.01uF 10% 50V
C869	1-164-232-11	s	CERAMIC, CHIP 0.01uF 10% 50V
C870	1-164-232-11	s	CERAMIC, CHIP 0.01uF 10% 50V
C871	1-164-232-11	s	CERAMIC, CHIP 0.01uF 10% 50V
C872	1-164-232-11	s	CERAMIC, CHIP 0.01uF 10% 50V
C873	1-126-391-11	s	ELECT, CHIP 47uF 20% 6.3V
C874	1-126-391-11	s	ELECT, CHIP 47uF 20% 6.3V
C875	1-163-038-91	s	CERAMIC 0.1uF 25V
C876	1-163-038-91	s	CERAMIC 0.1uF 25V
C877	1-164-232-11	s	CERAMIC, CHIP 0.01uF 10% 50V
C878	1-164-232-11	s	CERAMIC, CHIP 0.01uF 10% 50V
C879	1-164-232-11	s	CERAMIC, CHIP 0.01uF 10% 50V
C880	1-164-232-11	s	CERAMIC, CHIP 0.01uF 10% 50V
C881	1-164-232-11	s	CERAMIC, CHIP 0.01uF 10% 50V
C882	1-164-232-11	s	CERAMIC, CHIP 0.01uF 10% 50V
C883	1-126-391-11	s	ELECT, CHIP 47uF 20% 6.3V
C884	1-126-391-11	s	ELECT, CHIP 47uF 20% 6.3V
C885	1-163-038-91	s	CERAMIC 0.1uF 25V
C886	1-163-038-91	s	CERAMIC 0.1uF 25V
C888	1-164-232-11	s	CERAMIC, CHIP 0.01uF 10% 50V
C889	1-164-232-11	s	CERAMIC, CHIP 0.01uF 10% 50V
C892	1-164-232-11	s	CERAMIC, CHIP 0.01uF 10% 50V
C893	1-164-232-11	s	CERAMIC, CHIP 0.01uF 10% 50V
C894	1-164-232-11	s	CERAMIC, CHIP 0.01uF 10% 50V
C895	1-164-232-11	s	CERAMIC, CHIP 0.01uF 10% 50V
C896	1-164-232-11	s	CERAMIC, CHIP 0.01uF 10% 50V
C897	1-164-232-11	s	CERAMIC, CHIP 0.01uF 10% 50V

(ES-20/20P BOARD[board suffix -11])

Ref. No. or Q'ty	Part No.	SP	Description
C898	1-113-577-11	s	ELECT SOLID 47uF 20% 16V
C899	1-113-577-11	s	ELECT SOLID 47uF 20% 16V
C900	1-113-500-11	s	TANTALUM 100uF 20% 10V
C901	1-113-500-11	s	TANTALUM 100uF 20% 10V
C902	1-163-089-00	s	CERAMIC, CHIP 6PF 50V [for J, UC]
C902	1-163-091-00	s	CERAMIC, CHIP 8PF 50V [for CE]
C903	1-163-089-00	s	CERAMIC, CHIP 6PF 50V [for J, UC]
C903	1-163-091-00	s	CERAMIC, CHIP 8PF 50V [for CE]
C908	1-163-222-11	s	CERAMIC 5PF 0.25PF 50V [for J, UC]
C908	1-163-089-00	s	CERAMIC, CHIP 6PF 50V [for CE]
C909	1-163-222-11	s	CERAMIC 5PF 0.25PF 50V [for J, UC]
C909	1-163-089-00	s	CERAMIC, CHIP 6PF 50V [for CE]
C910	1-113-642-11	s	TANTALUM 47uF 20% 10V
C911	1-113-577-11	s	ELECT SOLID 47uF 20% 16V
C912	1-113-642-11	s	TANTALUM 47uF 20% 10V
C913	1-113-642-11	s	TANTALUM 47uF 20% 10V
C914	1-113-577-11	s	ELECT SOLID 47uF 20% 16V
C915	1-113-642-11	s	TANTALUM 47uF 20% 10V
C916	1-113-642-11	s	TANTALUM 47uF 20% 10V
C917	1-113-577-11	s	ELECT SOLID 47uF 20% 16V
C918	1-113-500-11	s	TANTALUM 100uF 20% 10V
C919	1-104-852-11	s	TANTALUM, CHIP 22uF 20% 10V
C1000	1-126-391-11	s	ELECT, CHIP 47uF 20% 6.3V
C1001	1-163-038-91	s	CERAMIC 0.1uF 25V
C1002	1-163-038-91	s	CERAMIC 0.1uF 25V
C1003	1-126-391-11	s	ELECT, CHIP 47uF 20% 6.3V
C1008	1-163-038-91	s	CERAMIC 0.1uF 25V
C1009	1-126-391-11	s	ELECT, CHIP 47uF 20% 6.3V
C1010	1-126-391-11	s	ELECT, CHIP 47uF 20% 6.3V
C1011	1-163-038-91	s	CERAMIC 0.1uF 25V
C1013	1-126-391-11	s	ELECT, CHIP 47uF 20% 6.3V
C1014	1-126-391-11	s	ELECT, CHIP 47uF 20% 6.3V
C1015	1-163-038-91	s	CERAMIC 0.1uF 25V
C1016	1-163-038-91	s	CERAMIC 0.1uF 25V
C1017	1-163-239-11	s	CERAMIC, CHIP 33PF 5% 50V [for J, UC]
C1018	1-163-259-91	s	CERAMIC 220PF 5% 50V [for J, UC]
C1019	1-163-089-00	s	CERAMIC, CHIP 6PF 50V [for J, UC]
C1019	1-163-231-11	s	CERAMIC 15PF 5% 50V [for CE]
C1020	1-163-239-11	s	CERAMIC, CHIP 33PF 5% 50V [for J, UC]
C1020	1-163-113-00	s	CERAMIC, CHIP 68PF 5% 50V [for CE]
C1021	1-164-232-11	s	CERAMIC, CHIP 0.01uF 10% 50V
C1022	1-164-232-11	s	CERAMIC, CHIP 0.01uF 10% 50V
C1023	1-126-391-11	s	ELECT, CHIP 47uF 20% 6.3V
C1024	1-163-038-91	s	CERAMIC 0.1uF 25V
C1025	1-163-038-91	s	CERAMIC 0.1uF 25V
C1026	1-126-396-11	s	ELECT, CHIP 47uF 20% 16V
C1027	1-126-396-11	s	ELECT, CHIP 47uF 20% 16V
C1028	1-163-038-91	s	CERAMIC 0.1uF 25V
C1029	1-163-038-91	s	CERAMIC 0.1uF 25V
C1031	1-163-038-91	s	CERAMIC 0.1uF 25V
C1032	1-126-391-11	s	ELECT, CHIP 47uF 20% 6.3V
C1033	1-126-391-11	s	ELECT, CHIP 47uF 20% 6.3V
C1034	1-163-038-91	s	CERAMIC 0.1uF 25V
C1035	1-163-038-91	s	CERAMIC 0.1uF 25V
C1036	1-128-397-21	s	ELECT 100uF 20% 16V

(ES-20/20P BOARD[board suffix -11])

Ref. No. or Q'ty	Part No.	SP	Description
C1037	1-128-397-21	s	ELECT 100uF 20% 16V
C1038	1-128-394-11	s	ELECT 220uF 20% 10V
C1039	1-164-232-11	s	CERAMIC, CHIP 0.01uF 10% 50V
C1040	1-135-149-21	s	TANTALUM, CHIP 2.2uF 10% 10V
C1041	1-128-394-11	s	ELECT 220uF 20% 10V
C1042	1-164-232-11	s	CERAMIC, CHIP 0.01uF 10% 50V
C1043	1-135-149-21	s	TANTALUM, CHIP 2.2uF 10% 10V
C1044	1-163-009-11	s	CERAMIC, CHIP 0.001uF 10% 50V
C1045	1-126-395-11	s	ELECT, CHIP 22uF 20% 16V
C1046	1-128-397-21	s	ELECT 100uF 20% 16V
C1047	1-128-394-11	s	ELECT 220uF 20% 10V
C1048	1-164-232-11	s	CERAMIC, CHIP 0.01uF 10% 50V
C1049	1-163-009-11	s	CERAMIC, CHIP 0.001uF 10% 50V
C1050	1-128-394-11	s	ELECT 220uF 20% 10V
C1054	1-126-391-11	s	ELECT, CHIP 47uF 20% 6.3V
C1055	1-163-038-91	s	CERAMIC 0.1uF 25V
C1057	1-126-391-11	s	ELECT, CHIP 47uF 20% 6.3V
C1058	1-163-038-91	s	CERAMIC 0.1uF 25V
C1059	1-126-391-11	s	ELECT, CHIP 47uF 20% 6.3V
C1060	1-163-038-91	s	CERAMIC 0.1uF 25V
C1061	1-113-577-11	s	ELECT SOLID 47uF 20% 16V
C1062	1-113-642-11	s	TANTALUM 47uF 20% 10V
C1063	1-113-642-11	s	TANTALUM 47uF 20% 10V
C1064	1-113-642-11	s	TANTALUM 47uF 20% 10V
C1065	1-163-038-91	s	CERAMIC 0.1uF 25V
C1066	1-163-227-11	s	CERAMIC, CHIP 10PF 5% 50V
C1067	1-163-227-11	s	CERAMIC, CHIP 10PF 5% 50V
C1068	1-163-227-11	s	CERAMIC, CHIP 10PF 5% 50V
CN2	1-764-080-21	s	PIN, CONNECTOR (PC BOARD) 8P
CP1	1-760-267-11	s	VCO, CRYSTAL 14.3818MHz [for J, UC]
CP1	1-760-269-11	s	CRYSTAL 17.734475MHz [for CE]
CP2	1-760-267-11	s	VCO, CRYSTAL 14.3818MHz [for J, UC]
CP2	1-760-266-11	s	VCO, CRYSTAL 14.18750MHz [for CE]
D1	8-719-801-78	s	DIODE 1SS184
D2	8-719-801-78	s	DIODE 1SS184
D3	8-719-800-76	s	DIODE 1SS226
D4	8-719-104-34	s	DIODE 1S2836
D6	8-719-801-78	s	DIODE 1SS184
D10	8-719-801-78	s	DIODE 1SS184
D11	8-719-801-78	s	DIODE 1SS184
D12	8-719-800-76	s	DIODE 1SS226
D500	8-719-104-34	s	DIODE 1S2836
D501	8-719-104-34	s	DIODE 1S2836
D1000	8-719-105-57	s	DIODE RD3.9MB
D1001	8-719-105-57	s	DIODE RD3.9MB
D1002	8-719-105-57	s	DIODE RD3.9MB
D1003	8-719-105-32	s	DIODE RD2.7M-B2
D1004	8-719-800-76	s	DIODE 1SS226
D1005	8-719-800-13	s	DIODE TLUR163
D1006	8-719-800-13	s	DIODE TLUR163
D1007	8-719-157-23	s	DIODE RD4.7M-B
D1009	8-719-021-31	s	DIODE UZM5.1B
D1010	8-719-800-13	s	DIODE TLUR163
D1011	8-719-800-13	s	DIODE TLUR163
D1012	8-719-157-23	s	DIODE RD4.7M-B

(ES-20/20P BOARD[board suffix -11])

Ref. No. or Q'ty	Part No.	SP	Description
DL800	1-411-271-21	s	DELAY LINE
DL801	1-411-272-21	s	DELAY LINE
FL800	1-402-647-11	s	DELAY LINE (90-DEG-C) (NTSC) [for J, UC]
FL800	1-402-646-21	s	DELAY LINE (90-DEG-C) (PAL) [for CE]
FL801	1-239-379-21	s	BPF [for J, UC]
FL801	1-239-380-11	s	FILTER, BANDPASS [for CE]
IC1	8-759-101-12	s	IC UPC311G2
IC2	8-759-925-74	s	IC SN74HC04ANS
IC3	8-759-239-58	s	IC TC74HC221AF
IC4	8-759-927-46	s	IC SN74HC00ANS
IC5	8-759-300-71	s	IC MC14053BF
IC8	8-759-239-58	s	IC TC74HC221AF
IC9	8-759-009-46	s	IC TC4528BF
IC10	8-759-925-74	s	IC SN74HC04ANS
IC11	8-759-239-58	s	IC TC74HC221AF
IC12	8-752-335-47	s	IC CXD1216M
IC13	8-759-510-71	s	IC BA10358F-E2
IC15	8-759-925-74	s	IC SN74HC04ANS
IC17	8-759-031-84	s	IC SC7S04F
IC18	8-752-335-47	s	IC CXD1216M
IC19	8-759-234-77	s	IC TC4S66F
IC20	8-759-242-64	s	IC TC4W53F
IC21	8-759-926-19	s	IC SN74HC158NS
IC22	8-752-341-58	s	IC CXD1217Q
IC24	8-759-031-84	s	IC SC7S04F
IC25	8-759-242-64	s	IC TC4W53F
IC26	8-759-510-71	s	IC BA10358F-E2
IC27	8-759-902-88	s	IC SN74LS123NS
IC28	8-759-242-64	s	IC TC4W53F
IC29	8-759-180-08	s	IC TC74HC4538AFS
IC30	8-759-112-66	s	IC UPC812G2
IC31	8-759-927-46	s	IC SN74HC00ANS
IC32	8-759-288-20	s	IC CXD8924Q
IC33	8-759-031-84	s	IC SC7S04F
IC34	8-759-927-46	s	IC SN74HC00ANS
IC35	8-759-035-87	s	IC SC7S00F
IC36	8-759-031-84	s	IC SC7S04F
IC37	8-759-239-58	s	IC TC74HC221AF
IC500	8-759-271-04	s	IC LT1252CS8
IC501	8-759-242-64	s	IC TC4W53F
IC502	8-759-242-64	s	IC TC4W53F
IC503	8-759-031-84	s	IC SC7S04F
IC504	8-759-242-64	s	IC TC4W53F
IC505	8-759-242-64	s	IC TC4W53F
IC507	8-759-030-55	s	IC MC1496M
IC509	8-759-242-64	s	IC TC4W53F
IC510	8-759-242-64	s	IC TC4W53F
IC512	8-759-030-55	s	IC MC1496M
IC519	8-759-906-53	s	IC TL062CPS
IC520	8-759-906-53	s	IC TL062CPS
IC521	8-759-906-53	s	IC TL062CPS
IC522	8-759-186-29	s	IC TC74VHC11F [for CE]
IC803	8-759-906-59	s	IC CX22017
IC804	8-759-242-64	s	IC TC4W53F
IC805	8-759-242-64	s	IC TC4W53F
IC806	8-759-242-64	s	IC TC4W53F
IC807	8-759-242-64	s	IC TC4W53F

(ES-20/20P BOARD[board suffix -11])

Ref. No. or Q'ty	Part No.	SP	Description
IC808	8-759-242-64	s	IC TC4W53F
IC809	8-759-271-04	s	IC LT1252CS8
IC810	8-759-242-64	s	IC TC4W53F
IC811	8-759-242-64	s	IC TC4W53F
IC812	8-759-271-04	s	IC LT1252CS8
IC813	8-759-242-64	s	IC TC4W53F
IC814	8-759-242-64	s	IC TC4W53F
IC815	8-759-271-04	s	IC LT1252CS8
IC816	8-759-242-64	s	IC TC4W53F
IC817	8-759-242-64	s	IC TC4W53F
IC818	8-759-242-64	s	IC TC4W53F
IC819	8-759-271-04	s	IC LT1252CS8
IC820	8-759-242-64	s	IC TC4W53F
IC821	8-759-242-64	s	IC TC4W53F
IC822	8-759-271-04	s	IC LT1252CS8
IC823	8-759-242-64	s	IC TC4W53F
IC824	8-759-242-64	s	IC TC4W53F
IC825	8-759-271-04	s	IC LT1252CS8
IC826	8-759-258-43	s	IC LT1253CS8-E2
IC827	8-759-271-04	s	IC LT1252CS8
IC828	8-759-271-04	s	IC LT1252CS8
IC829	8-759-258-43	s	IC LT1253CS8-E2
IC1000	8-759-242-64	s	IC TC4W53F
IC1001	8-759-242-64	s	IC TC4W53F
IC1002	8-759-258-43	s	IC LT1253CS8-E2
IC1003	8-759-233-44	s	IC TC74HC595AF
IC1004	8-759-160-19	s	IC CXD8826Q
IC1005	8-759-745-64	s	IC NJM4560M
IC1006	8-759-906-53	s	IC TL062CPS
IC1007	8-759-906-53	s	IC TL062CPS
IC1008	8-759-242-64	s	IC TC4W53F
IC1009	8-759-236-19	s	IC TC74HC151AF(EL)
IC1010	8-759-242-64	s	IC TC4W53F
IC1011	8-759-242-64	s	IC TC4W53F
IC1012	8-759-242-64	s	IC TC4W53F
IC1013	8-759-032-23	s	IC MC74HC74AF
IC1014	8-759-274-67	s	IC LM4040BIM3X-5.0
IC1015	8-759-925-80	s	IC SN74HC14ANS
L1	1-410-385-11	s	INDUCTOR, CHIP 22uH
L2	1-410-385-11	s	INDUCTOR, CHIP 22uH
L3	1-410-387-11	s	INDUCTOR CHIP 33uH
L4	1-410-385-11	s	INDUCTOR, CHIP 22uH
L5	1-410-385-11	s	INDUCTOR, CHIP 22uH
L6	1-410-656-11	s	INDUCTOR CHIP 150uH
L7	1-412-279-31	s	INDUCTOR 270uH [for J, UC]
L7	1-412-282-41	s	INDUCTOR 470uH [for CE]
L8	1-412-031-11	s	INDUCTOR CHIP 47uH
L9	1-410-656-11	s	INDUCTOR CHIP 150uH [for J, UC]
L9	1-410-393-11	s	INDUCTOR CHIP 100uH [for CE]
L10	1-412-031-11	s	INDUCTOR CHIP 47uH
L11	1-412-031-11	s	INDUCTOR CHIP 47uH
L12	1-412-031-11	s	INDUCTOR CHIP 47uH
L13	1-412-031-11	s	INDUCTOR CHIP 47uH
L14	1-410-385-11	s	INDUCTOR, CHIP 22uH
L15	1-410-385-11	s	INDUCTOR, CHIP 22uH
L501	1-410-385-11	s	INDUCTOR, CHIP 22uH
L502	1-410-385-11	s	INDUCTOR, CHIP 22uH
L503	1-410-385-11	s	INDUCTOR, CHIP 22uH

(ES-20/20P BOARD[board suffix -11])

Ref. No. or Q'ty	Part No.	SP	Description
L504	1-410-385-11	s	INDUCTOR, CHIP 22uH
L506	1-410-385-11	s	INDUCTOR, CHIP 22uH
L507	1-410-385-11	s	INDUCTOR, CHIP 22uH
L508	1-412-279-31	s	INDUCTOR, 270uH
L510	1-410-385-11	s	INDUCTOR, CHIP 22uH
L511	1-410-385-11	s	INDUCTOR, CHIP 22uH
L514	1-410-385-11	s	INDUCTOR, CHIP 22uH
L515	1-410-385-11	s	INDUCTOR, CHIP 22uH
L800	1-410-385-11	s	INDUCTOR, CHIP 22uH
L801	1-412-031-11	s	INDUCTOR CHIP 47uH
L802	1-410-392-11	s	INDUCTOR, CHIP 82uH [for J, UC]
L802	1-410-656-11	s	INDUCTOR CHIP 150uH [for CE]
L803	1-410-392-11	s	INDUCTOR, CHIP 82uH [for J, UC]
L803	1-410-656-11	s	INDUCTOR CHIP 150uH [for CE]
L804	1-412-031-11	s	INDUCTOR CHIP 47uH
L805	1-412-031-11	s	INDUCTOR CHIP 47uH
L806	1-412-031-11	s	INDUCTOR CHIP 47uH
L807	1-412-280-31	s	INDUCTOR 330uH
L808	1-412-280-31	s	INDUCTOR 330uH
L809	1-412-031-11	s	INDUCTOR CHIP 47uH
L810	1-412-031-11	s	INDUCTOR CHIP 47uH
L811	1-412-031-11	s	INDUCTOR CHIP 47uH
L812	1-412-031-11	s	INDUCTOR CHIP 47uH
L813	1-410-385-11	s	INDUCTOR, CHIP 22uH
L814	1-410-385-11	s	INDUCTOR, CHIP 22uH
L815	1-410-385-11	s	INDUCTOR, CHIP 22uH
L816	1-410-385-11	s	INDUCTOR, CHIP 22uH
L817	1-410-385-11	s	INDUCTOR, CHIP 22uH
L818	1-410-385-11	s	INDUCTOR, CHIP 22uH
L1000	1-410-385-11	s	INDUCTOR, CHIP 22uH
L1001	1-410-385-11	s	INDUCTOR, CHIP 22uH
L1002	1-410-385-11	s	INDUCTOR, CHIP 22uH
L1003	1-410-385-11	s	INDUCTOR, CHIP 22uH
L1004	1-410-385-11	s	INDUCTOR, CHIP 22uH
L1005	1-410-385-11	s	INDUCTOR, CHIP 22uH
L1006	1-412-282-41	s	INDUCTOR 470uH [for J, UC]
L1007	1-410-392-11	s	INDUCTOR, CHIP 82uH [for J, UC]
L1007	1-410-656-11	s	INDUCTOR CHIP 150uH [for CE]
L1008	1-410-385-11	s	INDUCTOR, CHIP 22uH
L1009	1-410-385-11	s	INDUCTOR, CHIP 22uH
L1010	1-410-948-11	s	INDUCTOR 100uH
L1011	1-410-948-11	s	INDUCTOR 100uH
L1012	1-410-948-11	s	INDUCTOR 100uH
L1014	1-410-385-11	s	INDUCTOR, CHIP 22uH
L1015	1-410-385-11	s	INDUCTOR, CHIP 22uH
Q1	8-729-122-63	s	TRANSISTOR 2SA1226
Q2	8-729-120-28	s	TRANSISTOR 2SC1623-L5L6
Q3	8-729-120-28	s	TRANSISTOR 2SC1623-L5L6
Q4	8-729-120-28	s	TRANSISTOR 2SC1623-L5L6
Q5	8-729-122-63	s	TRANSISTOR 2SA1226
Q6	8-729-120-28	s	TRANSISTOR 2SC1623-L5L6
Q7	8-729-120-28	s	TRANSISTOR 2SC1623-L5L6
Q8	8-729-122-63	s	TRANSISTOR 2SA1226
Q9	8-729-122-63	s	TRANSISTOR 2SA1226
Q10	8-729-120-28	s	TRANSISTOR 2SC1623-L5L6
Q11	8-729-122-63	s	TRANSISTOR 2SA1226
Q12	8-729-109-44	s	TRANSISTOR 2SK94
Q13	8-729-216-22	s	TRANSISTOR 2SA1162
Q14	8-729-120-28	s	TRANSISTOR 2SC1623-L5L6

(ES-20/20P BOARD[board suffix -11])

Ref. No. or Q'ty	Part No.	SP	Description
Q15	8-729-216-22	s	TRANSISTOR 2SA1162
Q16	8-729-120-28	s	TRANSISTOR 2SC1623-L5L6
Q17	8-729-120-28	s	TRANSISTOR 2SC1623-L5L6
Q18	8-729-120-28	s	TRANSISTOR 2SC1623-L5L6
Q19	8-729-122-63	s	TRANSISTOR 2SA1226
Q20	8-729-122-63	s	TRANSISTOR 2SA1226
Q21	8-729-122-63	s	TRANSISTOR 2SA1226
Q22	8-729-109-44	s	TRANSISTOR 2SK94
Q23	8-729-120-28	s	TRANSISTOR 2SC1623-L5L6
Q500	8-729-216-22	s	TRANSISTOR 2SA1162
Q501	8-729-122-63	s	TRANSISTOR 2SA1226
Q502	8-729-101-25	s	TRANSISTOR 2SC1009A
Q503	8-729-216-22	s	TRANSISTOR 2SA1162
Q504	8-729-216-22	s	TRANSISTOR 2SA1162
Q505	8-729-031-37	s	TRANSISTOR 2SC3837KQ
Q506	8-729-216-22	s	TRANSISTOR 2SA1162
Q507	8-729-216-22	s	TRANSISTOR 2SA1162
Q508	8-729-031-37	s	TRANSISTOR 2SC3837KQ
Q509	8-729-216-22	s	TRANSISTOR 2SA1162
Q510	8-729-122-63	s	TRANSISTOR 2SA1226
Q511	8-729-101-25	s	TRANSISTOR 2SC1009A
Q512	8-729-216-22	s	TRANSISTOR 2SA1162
Q513	8-729-120-28	s	TRANSISTOR 2SC1623-L5L6
Q514	8-729-122-63	s	TRANSISTOR 2SA1226
Q515	8-729-101-25	s	TRANSISTOR 2SC1009A
Q519	8-729-216-22	s	TRANSISTOR 2SA1162
Q520	8-729-120-28	s	TRANSISTOR 2SC1623-L5L6
Q521	8-729-216-22	s	TRANSISTOR 2SA1162
Q522	8-729-216-22	s	TRANSISTOR 2SA1162
Q523	8-729-216-22	s	TRANSISTOR 2SA1162
Q524	8-729-101-25	s	TRANSISTOR 2SC1009A
Q525	8-729-402-19	s	TRANSISTOR XN6501
Q526	8-729-216-22	s	TRANSISTOR 2SA1162
Q527	8-729-101-25	s	TRANSISTOR 2SC1009A
Q528	8-729-120-28	s	TRANSISTOR 2SC1623-L5L6
Q529	8-729-101-25	s	TRANSISTOR 2SC1009A
Q530	8-729-216-22	s	TRANSISTOR 2SA1162
Q531	8-729-216-22	s	TRANSISTOR 2SA1162
Q532	8-729-421-71	s	TRANSISTOR 2SK620
Q533	8-729-101-25	s	TRANSISTOR 2SC1009A
Q534	8-729-101-25	s	TRANSISTOR 2SC1009A
Q535	8-729-216-22	s	TRANSISTOR 2SA1162
Q536	8-729-216-22	s	TRANSISTOR 2SA1162
Q537	8-729-421-71	s	TRANSISTOR 2SK620
Q538	8-729-101-25	s	TRANSISTOR 2SC1009A
Q539	8-729-101-25	s	TRANSISTOR 2SC1009A
Q540	8-729-216-22	s	TRANSISTOR 2SA1162
Q541	8-729-216-22	s	TRANSISTOR 2SA1162
Q542	8-729-421-71	s	TRANSISTOR 2SK620
Q543	8-729-120-28	s	TRANSISTOR 2SC1623-L5L6
Q544	8-729-120-28	s	TRANSISTOR 2SC1623-L5L6
Q545	8-729-101-25	s	TRANSISTOR 2SC1009A
Q546	8-729-101-25	s	TRANSISTOR 2SC1009A
Q547	8-729-402-19	s	TRANSISTOR XN6501
Q548	8-729-216-22	s	TRANSISTOR 2SA1162
Q549	8-729-216-22	s	TRANSISTOR 2SA1162
Q550	8-729-216-22	s	TRANSISTOR 2SA1162
Q551	8-729-216-22	s	TRANSISTOR 2SA1162
Q552	8-729-120-28	s	TRANSISTOR 2SC1623-L5L6

(ES-20/20P BOARD[board suffix -11])

Ref. No. or Q'ty	Part No.	SP	Description
Q553	8-729-216-22	s	TRANSISTOR 2SA1162
Q554	8-729-120-28	s	TRANSISTOR 2SC1623-L5L6
Q555	8-729-216-22	s	TRANSISTOR 2SA1162
Q556	8-729-120-28	s	TRANSISTOR 2SC1623-L5L6
Q557	8-729-120-28	s	TRANSISTOR 2SC1623-L5L6
Q558	8-729-216-22	s	TRANSISTOR 2SA1162
Q560	8-729-120-28	s	TRANSISTOR 2SC1623-L5L6
Q561	8-729-120-28	s	TRANSISTOR 2SC1623-L5L6
Q562	8-729-120-28	s	TRANSISTOR 2SC1623-L5L6
Q563	8-729-216-22	s	TRANSISTOR 2SA1162
Q564	8-729-216-22	s	TRANSISTOR 2SA1162
Q565	8-729-216-22	s	TRANSISTOR 2SA1162
Q566	8-729-120-28	s	TRANSISTOR 2SC1623-L5L6
Q567	8-729-120-28	s	TRANSISTOR 2SC1623-L5L6
Q568	8-729-120-28	s	TRANSISTOR 2SC1623-L5L6
Q569	8-729-216-22	s	TRANSISTOR 2SA1162
Q570	8-729-216-22	s	TRANSISTOR 2SA1162
Q571	8-729-216-22	s	TRANSISTOR 2SA1162
Q572	8-729-120-28	s	TRANSISTOR 2SC1623-L5L6
Q573	8-729-216-22	s	TRANSISTOR 2SA1162
Q574	8-729-216-22	s	TRANSISTOR 2SA1162
Q576	8-729-120-28	s	TRANSISTOR 2SC1623-L5L6
Q577	8-729-216-22	s	TRANSISTOR 2SA1162
Q578	8-729-216-22	s	TRANSISTOR 2SA1162
Q800	8-729-120-28	s	TRANSISTOR 2SC1623-L5L6 [for J, UC]
Q801	8-729-120-28	s	TRANSISTOR 2SC1623-L5L6
Q802	8-729-200-87	s	TRANSISTOR 2SC2714-Y
Q803	8-729-120-28	s	TRANSISTOR 2SC1623-L5L6
Q804	8-729-120-28	s	TRANSISTOR 2SC1623-L5L6
Q805	8-729-120-28	s	TRANSISTOR 2SC1623-L5L6
Q806	8-729-120-28	s	TRANSISTOR 2SC1623-L5L6
Q807	8-729-216-22	s	TRANSISTOR 2SA1162
Q808	8-729-120-28	s	TRANSISTOR 2SC1623-L5L6
Q809	8-729-216-22	s	TRANSISTOR 2SA1162
Q810	8-729-216-22	s	TRANSISTOR 2SA1162
Q811	8-729-216-22	s	TRANSISTOR 2SA1162
Q812	8-729-120-28	s	TRANSISTOR 2SC1623-L5L6
Q813	8-729-120-28	s	TRANSISTOR 2SC1623-L5L6
Q814	8-729-120-28	s	TRANSISTOR 2SC1623-L5L6
Q815	8-729-216-22	s	TRANSISTOR 2SA1162
Q816	8-729-120-28	s	TRANSISTOR 2SC1623-L5L6
Q817	8-729-216-22	s	TRANSISTOR 2SA1162
Q818	8-729-120-28	s	TRANSISTOR 2SC1623-L5L6
Q819	8-729-120-28	s	TRANSISTOR 2SC1623-L5L6
Q820	8-729-120-28	s	TRANSISTOR 2SC1623-L5L6
Q821	8-729-101-25	s	TRANSISTOR 2SC1009A
Q822	8-729-120-28	s	TRANSISTOR 2SC1623-L5L6
Q823	8-729-101-25	s	TRANSISTOR 2SC1009A
Q824	8-729-101-25	s	TRANSISTOR 2SC1009A
Q825	8-729-120-28	s	TRANSISTOR 2SC1623-L5L6
Q826	8-729-120-28	s	TRANSISTOR 2SC1623-L5L6
Q827	8-729-120-28	s	TRANSISTOR 2SC1623-L5L6
Q828	8-729-122-63	s	TRANSISTOR 2SA1226
Q829	8-729-101-25	s	TRANSISTOR 2SC1009A
Q830	8-729-216-22	s	TRANSISTOR 2SA1162
Q831	8-729-216-22	s	TRANSISTOR 2SA1162
Q832	8-729-120-28	s	TRANSISTOR 2SC1623-L5L6
Q833	8-729-120-28	s	TRANSISTOR 2SC1623-L5L6

(ES-20/20P BOARD[board suffix -11])

Ref. No. or Q'ty	Part No.	SP	Description
Q834	8-729-122-63	s	TRANSISTOR 2SA1226
Q835	8-729-120-28	s	TRANSISTOR 2SC1623-L5L6
Q836	8-729-216-22	s	TRANSISTOR 2SA1162
Q837	8-729-120-28	s	TRANSISTOR 2SC1623-L5L6
Q838	8-729-120-28	s	TRANSISTOR 2SC1623-L5L6
Q839	8-729-101-25	s	TRANSISTOR 2SC1009A
Q840	8-729-122-63	s	TRANSISTOR 2SA1226
Q841	8-729-122-63	s	TRANSISTOR 2SA1226
Q842	8-729-120-28	s	TRANSISTOR 2SC1623-L5L6
Q843	8-729-216-22	s	TRANSISTOR 2SA1162
Q844	8-729-120-28	s	TRANSISTOR 2SC1623-L5L6
Q845	8-729-120-28	s	TRANSISTOR 2SC1623-L5L6
Q846	8-729-216-22	s	TRANSISTOR 2SA1162
Q847	8-729-216-22	s	TRANSISTOR 2SA1162
Q848	8-729-216-22	s	TRANSISTOR 2SA1162
Q849	8-729-216-22	s	TRANSISTOR 2SA1162
Q850	8-729-216-22	s	TRANSISTOR 2SA1162
Q851	8-729-216-22	s	TRANSISTOR 2SA1162
Q852	8-729-101-25	s	TRANSISTOR 2SC1009A
Q853	8-729-120-28	s	TRANSISTOR 2SC1623-L5L6
Q1000	8-729-216-22	s	TRANSISTOR 2SA1162
Q1001	8-729-216-22	s	TRANSISTOR 2SA1162
Q1002	8-729-216-22	s	TRANSISTOR 2SA1162
Q1003	8-729-216-22	s	TRANSISTOR 2SA1162
Q1004	8-729-216-22	s	TRANSISTOR 2SA1162
Q1005	8-729-216-22	s	TRANSISTOR 2SA1162
Q1006	8-729-216-22	s	TRANSISTOR 2SA1162
Q1007	8-729-216-22	s	TRANSISTOR 2SA1162
Q1008	8-729-120-28	s	TRANSISTOR 2SC1623-L5L6
Q1009	8-729-120-28	s	TRANSISTOR 2SC1623-L5L6
Q1010	8-729-120-28	s	TRANSISTOR 2SC1623-L5L6
Q1011	8-729-120-28	s	TRANSISTOR 2SC1623-L5L6
Q1012	8-729-216-22	s	TRANSISTOR 2SA1162
Q1013	8-729-216-22	s	TRANSISTOR 2SA1162
Q1014	8-729-821-88	s	TRANSISTOR 2SK1332-3
Q1015	8-729-216-22	s	TRANSISTOR 2SA1162
Q1016	8-729-216-22	s	TRANSISTOR 2SA1162
Q1017	8-729-821-88	s	TRANSISTOR 2SK1332-3
Q1018	8-729-216-22	s	TRANSISTOR 2SA1162
Q1019	8-729-216-22	s	TRANSISTOR 2SA1162
Q1020	8-729-821-88	s	TRANSISTOR 2SK1332-3
Q1021	8-729-216-22	s	TRANSISTOR 2SA1162
Q1022	8-729-216-22	s	TRANSISTOR 2SA1162
Q1023	8-729-821-88	s	TRANSISTOR 2SK1332-3
Q1024	8-729-101-25	s	TRANSISTOR 2SC1009A
Q1025	8-729-216-22	s	TRANSISTOR 2SA1162
Q1026	8-729-120-28	s	TRANSISTOR 2SC1623-L5L6
Q1027	8-729-120-28	s	TRANSISTOR 2SC1623-L5L6
Q1028	8-729-216-22	s	TRANSISTOR 2SA1162
Q1029	8-729-216-22	s	TRANSISTOR 2SA1162
Q1030	8-729-120-28	s	TRANSISTOR 2SC1623-L5L6
Q1031	8-729-216-22	s	TRANSISTOR 2SA1162
Q1032	8-729-120-28	s	TRANSISTOR 2SC1623-L5L6
Q1033	8-729-216-22	s	TRANSISTOR 2SA1162
Q1034	8-729-120-28	s	TRANSISTOR 2SC1623-L5L6
Q1035	8-729-216-22	s	TRANSISTOR 2SA1162
Q1036	8-729-216-22	s	TRANSISTOR 2SA1162
Q1037	8-729-101-07	s	TRANSISTOR 2SB798
Q1038	8-729-101-07	s	TRANSISTOR 2SB798

(ES-20/20P BOARD[board suffix -11])

Ref. No. or Q'ty	Part No.	SP	Description
Q1039	8-729-807-51	s	TRANSISTOR 2SD1623-S
Q1041	8-729-216-22	s	TRANSISTOR 2SA1162
Q1042	8-729-120-28	s	TRANSISTOR 2SC1623-L5L6
Q1043	8-729-216-22	s	TRANSISTOR 2SA1162
Q1044	8-729-120-28	s	TRANSISTOR 2SC1623-L5L6
Q1045	8-729-216-22	s	TRANSISTOR 2SA1162
Q1046	8-729-120-28	s	TRANSISTOR 2SC1623-L5L6
R1	1-216-073-00	s	METAL, CHIP 10K 5% 1/10W
R2	1-216-089-91	s	METAL 47K 5% 1/10W
R3	1-216-079-00	s	METAL, CHIP 18K 5% 1/10W
R4	1-216-025-91	s	METAL 100 5% 1/10W
R5	1-216-089-91	s	METAL 47K 5% 1/10W
R6	1-216-057-00	s	METAL, CHIP 2.2K 5% 1/10W
R7	1-216-061-00	s	METAL, CHIP 3.3K 5% 1/10W
R8	1-216-069-00	s	METAL, CHIP 6.8K 5% 1/10W
R9	1-216-057-00	s	METAL, CHIP 2.2K 5% 1/10W
R10	1-216-644-11	s	METAL, CHIP 510 0.5% 1/10W
R11	1-216-651-11	s	METAL, CHIP 1K 0.5% 1/10W
R12	1-216-657-11	s	METAL, CHIP 1.8K 0.5% 1/10W
R13	1-216-663-11	s	METAL, CHIP 3.3K 0.5% 1/10W
R14	1-216-652-11	s	METAL, CHIP 1.1K 0.5% 1/10W
R15	1-216-097-91	s	METAL 100K 5% 1/10W
R16	1-216-049-91	s	METAL 1K 5% 1/10W
R17	1-216-057-00	s	METAL, CHIP 2.2K 5% 1/10W
R18	1-216-053-00	s	METAL, CHIP 1.5K 5% 1/10W
R19	1-216-097-91	s	METAL 100K 5% 1/10W
R20	1-216-009-00	s	METAL, CHIP 22 5% 1/10W
R21	1-216-065-00	s	METAL, CHIP 4.7K 5% 1/10W
R22	1-216-097-91	s	METAL 100K 5% 1/10W
R23	1-216-049-91	s	METAL 1K 5% 1/10W
R24	1-216-670-11	s	METAL, CHIP 6.2K 0.5% 1/10W
R25	1-216-103-00	s	METAL, CHIP 180K 5% 1/10W
R26	1-216-057-00	s	METAL, CHIP 2.2K 5% 1/10W
R27	1-216-069-00	s	METAL, CHIP 6.8K 5% 1/10W
R28	1-216-667-11	s	METAL, CHIP 4.7K 0.5% 1/10W
R29	1-216-121-91	s	METAL 1M 5% 1/10W
R30	1-216-667-11	s	METAL, CHIP 4.7K 0.5% 1/10W
R31	1-216-049-91	s	METAL 1K 5% 1/10W
R33	1-208-805-11	s	METAL 9.1K 0.50% 1/10W
R34	1-208-805-11	s	METAL 9.1K 0.50% 1/10W
R35	1-216-049-91	s	METAL 1K 5% 1/10W
R36	1-216-089-91	s	METAL 47K 5% 1/10W
R37	1-216-049-91	s	METAL 1K 5% 1/10W
R40	1-216-035-00	s	METAL, CHIP 270 5% 1/10W
R44	1-216-093-00	s	METAL, CHIP 68K 5% 1/10W
R48	1-216-675-11	s	METAL, CHIP 10K 0.5% 1/10W
R50	1-216-675-11	s	METAL, CHIP 10K 0.5% 1/10W
R51	1-216-033-00	s	METAL, CHIP 220 5% 1/10W
R53	1-216-659-11	s	METAL, CHIP 2.2K 0.5% 1/10W
R54	1-216-295-00	s	METAL, CHIP 0 5% 1/10W [for J, UC]
R55	1-216-295-00	s	METAL, CHIP 0 5% 1/10W
R56	1-216-295-00	s	METAL, CHIP 0 5% 1/10W [for CE]
R57	1-216-675-11	s	METAL, CHIP 10K 0.5% 1/10W
R58	1-216-049-91	s	METAL 1K 5% 1/10W
R59	1-216-073-00	s	METAL, CHIP 10K 5% 1/10W
R60	1-216-065-00	s	METAL, CHIP 4.7K 5% 1/10W
R61	1-216-683-11	s	METAL, CHIP 22K 0.5% 1/10W
R62	1-216-683-11	s	METAL, CHIP 22K 0.5% 1/10W

(ES-20/20P BOARD[board suffix -11])

Ref. No. or Q'ty	Part No.	SP	Description
R63	1-216-683-11	s	METAL, CHIP 22K 0.5% 1/10W
R64	1-216-683-11	s	METAL, CHIP 22K 0.5% 1/10W
R65	1-216-049-91	s	METAL 1K 5% 1/10W
R66	1-216-672-11	s	METAL, CHIP 7.5K 0.5% 1/10W [for J, UC]
R66	1-216-677-11	s	METAL, CHIP 12K 0.5% 1/10W [for CE]
R70	1-216-049-91	s	METAL 1K 5% 1/10W
R71	1-216-063-91	s	METAL 3.9K 5% 1/10W
R72	1-216-657-11	s	METAL, CHIP 1.8K 0.5% 1/10W
R73	1-216-653-11	s	METAL, CHIP 1.2K 0.5% 1/10W
R74	1-216-073-00	s	METAL, CHIP 10K 5% 1/10W
R75	1-216-065-00	s	METAL, CHIP 4.7K 5% 1/10W
R76	1-216-033-00	s	METAL, CHIP 220 5% 1/10W
R77	1-216-021-00	s	METAL, CHIP 68 5% 1/10W
R78	1-216-065-00	s	METAL, CHIP 4.7K 5% 1/10W
R79	1-216-679-11	s	METAL, CHIP 15K 0.5% 1/10W
R80	1-216-295-00	s	METAL, CHIP 0 5% 1/10W
R81	1-216-295-00	s	METAL, CHIP 0 5% 1/10W1/10W
R82	1-216-049-91	s	METAL 1K 5% 1/10W
R84	1-216-659-11	s	METAL, CHIP 2.2K 0.5% 1/10W
R85	1-216-659-11	s	METAL, CHIP 2.2K 0.5% 1/10W
R86	1-216-069-00	s	METAL, CHIP 6.8K 5% 1/10W
R87	1-216-025-91	s	METAL 100 5% 1/10W
R88	1-216-061-00	s	METAL, CHIP 3.3K 5% 1/10W
R89	1-216-033-00	s	METAL, CHIP 220 5% 1/10W
R96	1-216-664-11	s	METAL, CHIP 3.6K 0.5% 1/10W
R97	1-216-049-91	s	METAL 1K 5% 1/10W
R98	1-216-049-91	s	METAL 1K 5% 1/10W
R99	1-216-033-00	s	METAL, CHIP 220 5% 1/10W
R100	1-216-079-00	s	METAL, CHIP 18K 5% 1/10W
R101	1-216-065-00	s	METAL, CHIP 4.7K 5% 1/10W
R102	1-216-049-91	s	METAL 1K 5% 1/10W
R103	1-216-037-00	s	METAL, CHIP 330 5% 1/10W
R104	1-216-061-00	s	METAL, CHIP 3.3K 5% 1/10W
R105	1-216-103-00	s	METAL, CHIP 180K 5% 1/10W
R106	1-216-053-00	s	METAL, CHIP 1.5K 5% 1/10W
R107	1-216-053-00	s	METAL, CHIP 1.5K 5% 1/10W [for J, UC]
R107	1-216-061-00	s	METAL, CHIP 3.3K 5% 1/10W [for CE]
R108	1-216-059-00	s	METAL, CHIP 2.7K 5% 1/10W
R109	1-216-073-00	s	METAL, CHIP 10K 5% 1/10W
R110	1-216-081-00	s	METAL, CHIP 22K 5% 1/10W
R111	1-216-669-11	s	METAL, CHIP 5.6K 0.5% 1/10W
R112	1-216-295-00	s	METAL, CHIP 0 5% 1/10W [for J, UC]
R113	1-216-295-00	s	METAL, CHIP 0 5% 1/10W
R114	1-216-295-00	s	METAL, CHIP 0 5% 1/10W [for CE]
R115	1-216-049-91	s	METAL 1K 5% 1/10W
R116	1-216-067-00	s	METAL, CHIP 5.6K 5% 1/10W
R117	1-216-061-00	s	METAL, CHIP 3.3K 5% 1/10W
R118	1-216-057-00	s	METAL, CHIP 2.2K 5% 1/10W
R119	1-216-069-00	s	METAL, CHIP 6.8K 5% 1/10W
R120	1-216-085-00	s	METAL, CHIP 33K 5% 1/10W
R121	1-216-097-91	s	METAL 100K 5% 1/10W
R122	1-208-772-11	s	METAL 390 0.50% 1/10W
R123	1-208-772-11	s	METAL 390 0.50% 1/10W
R124	1-216-073-00	s	METAL, CHIP 10K 5% 1/10W
R125	1-216-049-91	s	METAL 1K 5% 1/10W
R126	1-216-067-00	s	METAL, CHIP 5.6K 5% 1/10W

(ES-20/20P BOARD[board suffix -11])

Ref. No. or Q'ty	Part No.	SP	Description
R127	1-216-073-00	s	METAL, CHIP 10K 5% 1/10W
R128	1-216-065-00	s	METAL, CHIP 4.7K 5% 1/10W
R129	1-216-025-91	s	METAL 100 5% 1/10W
R130	1-216-295-00	s	METAL, CHIP 0 5% 1/10W [for J, UC]
R131	1-216-049-91	s	METAL 1K 5% 1/10W
R132	1-216-295-00	s	METAL, CHIP 0 5% 1/10W [for CE]
R133	1-216-049-91	s	METAL 1K 5% 1/10W
R134	1-216-295-00	s	METAL, CHIP 0 5% 1/10W [for J, UC]
R135	1-216-295-00	s	METAL, CHIP 0 5% 1/10W [for CE]
R136	1-216-295-00	s	METAL, CHIP 0 5% 1/10W
R137	1-216-295-00	s	METAL, CHIP 0 5% 1/10W [for J, UC]
R138	1-216-121-91	s	METAL 1M 5% 1/10W
R139	1-216-121-91	s	METAL 1M 5% 1/10W
R140	1-216-073-00	s	METAL, CHIP 10K 5% 1/10W
R141	1-216-686-11	s	METAL, CHIP 30K 0.5% 1/10W
R142	1-208-816-11	s	METAL 27K 0.50% 1/10W
R143	1-216-073-00	s	METAL, CHIP 10K 5% 1/10W
R144	1-216-025-91	s	METAL 100 5% 1/10W
R145	1-216-057-00	s	METAL, CHIP 2.2K 5% 1/10W
R146	1-216-049-91	s	METAL 1K 5% 1/10W
R147	1-216-295-00	s	METAL, CHIP 0 5% 1/10W
R148	1-216-049-91	s	METAL 1K 5% 1/10W
R150	1-216-673-11	s	METAL, CHIP 8.2K 0.5% 1/10W
R151	1-216-687-11	s	METAL, CHIP 33K 0.5% 1/10W
R152	1-216-683-11	s	METAL, CHIP 22K 0.5% 1/10W
R153	1-216-675-11	s	METAL, CHIP 10K 0.5% 1/10W
R154	1-216-687-11	s	METAL, CHIP 33K 0.5% 1/10W
R155	1-216-674-11	s	METAL, CHIP 9.1K 0.5% 1/10W
R156	1-216-073-00	s	METAL, CHIP 10K 5% 1/10W
R157	1-216-025-91	s	METAL 100 5% 1/10W
R158	1-216-049-91	s	METAL 1K 5% 1/10W
R159	1-216-057-00	s	METAL, CHIP 2.2K 5% 1/10W
R161	1-216-073-00	s	METAL, CHIP 10K 5% 1/10W
R162	1-216-077-00	s	METAL, CHIP 15K 5% 1/10W
R163	1-216-025-91	s	METAL 100 5% 1/10W
R164	1-216-657-11	s	METAL, CHIP 1.8K 0.5% 1/10W
R165	1-216-077-00	s	METAL, CHIP 15K 5% 1/10W
R166	1-216-672-11	s	METAL, CHIP 7.5K 0.5% 1/10W
R167	1-216-295-00	s	METAL, CHIP 0 5% 1/10W [for J, UC]
R168	1-216-295-00	s	METAL, CHIP 0 5% 1/10W [for CE]
R169	1-216-295-00	s	METAL, CHIP 0 5% 1/10W [for CE]
R170	1-216-295-00	s	METAL, CHIP 0 5% 1/10W [for J, UC]
R171	1-216-295-00	s	METAL, CHIP 0 5% 1/10W [for CE]
R172	1-216-295-00	s	METAL, CHIP 0 5% 1/10W [for J, UC]
R173	1-216-295-00	s	METAL, CHIP 0 5% 1/10W [for J, UC]
R174	1-216-295-00	s	METAL, CHIP 0 5% 1/10W [for CE]
R175	1-216-097-91	s	METAL 100K 5% 1/10W
R176	1-216-097-91	s	METAL 100K 5% 1/10W
R177	1-216-097-91	s	METAL 100K 5% 1/10W
R178	1-216-097-91	s	METAL 100K 5% 1/10W
R179	1-216-097-91	s	METAL 100K 5% 1/10W
R180	1-216-097-91	s	METAL 100K 5% 1/10W
R182	1-216-049-91	s	METAL 1K 5% 1/10W
R183	1-216-033-00	s	METAL, CHIP 220 5% 1/10W
R184	1-216-097-91	s	METAL 100K 5% 1/10W
R185	1-208-805-11	s	METAL 9.1K 0.50% 1/10W
R186	1-216-069-00	s	METAL, CHIP 6.8K 5% 1/10W
R187	1-216-033-00	s	METAL, CHIP 220 5% 1/10W
R188	1-216-053-00	s	METAL, CHIP 1.5K 5% 1/10W

(ES-20/20P BOARD[board suffix -11])

Ref. No. or Q'ty	Part No.	SP	Description
R189	1-216-085-00	s	METAL, CHIP 33K 5% 1/10W
R500	1-216-069-00	s	METAL, CHIP 6.8K 5% 1/10W
R501	1-216-025-91	s	METAL 100 5% 1/10W
R502	1-216-065-00	s	METAL, CHIP 4.7K 5% 1/10W
R503	1-216-025-91	s	METAL 100 5% 1/10W
R504	1-216-065-00	s	METAL, CHIP 4.7K 5% 1/10W
R505	1-216-644-11	s	METAL, CHIP 510 0.5% 1/10W
R506	1-216-067-00	s	METAL, CHIP 5.6K 5% 1/10W
R507	1-216-041-00	s	METAL, CHIP 470 5% 1/10W
R508	1-216-675-11	s	METAL, CHIP 10K 0.5% 1/10W
R509	1-216-655-11	s	METAL, CHIP 1.5K 0.5% 1/10W [for J, UC]
R509	1-216-657-11	s	METAL, CHIP 1.8K 0.5% 1/10W [for CE]
R510	1-216-041-00	s	METAL, CHIP 470 5% 1/10W
R511	1-216-651-11	s	METAL, CHIP 1K 0.5% 1/10W
R512	1-216-025-91	s	METAL 100 5% 1/10W
R513	1-216-055-00	s	METAL, CHIP 1.8K 5% 1/10W
R514	1-216-025-91	s	METAL 100 5% 1/10W
R515	1-216-041-00	s	METAL, CHIP 470 5% 1/10W
R516	1-216-025-91	s	METAL 100 5% 1/10W
R517	1-216-069-00	s	METAL, CHIP 6.8K 5% 1/10W
R518	1-216-651-11	s	METAL, CHIP 1K 0.5% 1/10W
R519	1-216-668-11	s	METAL, CHIP 5.1K 0.5% 1/10W
R520	1-216-670-11	s	METAL, CHIP 6.2K 0.5% 1/10W
R521	1-216-069-00	s	METAL, CHIP 6.8K 5% 1/10W
R522	1-216-073-00	s	METAL, CHIP 10K 5% 1/10W
R523	1-216-025-91	s	METAL 100 5% 1/10W
R524	1-216-065-00	s	METAL, CHIP 4.7K 5% 1/10W
R525	1-216-025-91	s	METAL 100 5% 1/10W
R526	1-216-065-00	s	METAL, CHIP 4.7K 5% 1/10W
R529	1-216-648-11	s	METAL, CHIP 750 0.5% 1/10W
R530	1-216-055-00	s	METAL, CHIP 1.8K 5% 1/10W
R531	1-216-676-11	s	METAL, CHIP 11K 0.5% 1/10W
R532	1-216-295-00	s	METAL, CHIP 0 5% 1/10W
R533	1-216-067-00	s	METAL, CHIP 5.6K 5% 1/10W
R534	1-216-033-00	s	METAL, CHIP 220 5% 1/10W
R535	1-216-646-11	s	METAL, CHIP 620 0.5% 1/10W
R536	1-216-097-91	s	METAL 100K 5% 1/10W
R537	1-216-049-91	s	METAL 1K 5% 1/10W
R538	1-216-045-00	s	METAL, CHIP 680 5% 1/10W
R539	1-216-069-00	s	METAL, CHIP 6.8K 5% 1/10W
R540	1-216-646-11	s	METAL, CHIP 620 0.5% 1/10W
R541	1-216-057-00	s	METAL, CHIP 2.2K 5% 1/10W
R542	1-216-049-91	s	METAL 1K 5% 1/10W
R543	1-216-065-00	s	METAL, CHIP 4.7K 5% 1/10W
R544	1-216-025-91	s	METAL 100 5% 1/10W
R545	1-216-025-91	s	METAL 100 5% 1/10W
R546	1-216-025-91	s	METAL 100 5% 1/10W
R547	1-216-065-00	s	METAL, CHIP 4.7K 5% 1/10W
R548	1-216-025-91	s	METAL 100 5% 1/10W
R549	1-216-065-00	s	METAL, CHIP 4.7K 5% 1/10W
R550	1-216-051-00	s	METAL, CHIP 1.2K 5% 1/10W
R563	1-216-648-11	s	METAL, CHIP 750 0.5% 1/10W
R564	1-216-055-00	s	METAL, CHIP 1.8K 5% 1/10W
R565	1-216-648-11	s	METAL, CHIP 750 0.5% 1/10W
R566	1-216-295-00	s	METAL, CHIP 0 5% 1/10W
R567	1-216-067-00	s	METAL, CHIP 5.6K 5% 1/10W
R568	1-216-033-00	s	METAL, CHIP 220 5% 1/10W

(ES-20/20P BOARD[board suffix -11])

Ref. No. or Q'ty	Part No.	SP	Description
R569	1-216-646-11	s	METAL, CHIP 620 0.5% 1/10W
R570	1-216-097-91	s	METAL 100K 5% 1/10W
R571	1-216-049-91	s	METAL 1K 5% 1/10W
R572	1-216-045-00	s	METAL, CHIP 680 5% 1/10W
R573	1-216-069-00	s	METAL, CHIP 6.8K 5% 1/10W
R574	1-216-646-11	s	METAL, CHIP 620 0.5% 1/10W
R575	1-216-057-00	s	METAL, CHIP 2.2K 5% 1/10W
R576	1-216-025-91	s	METAL 100 5% 1/10W
R577	1-216-065-00	s	METAL, CHIP 4.7K 5% 1/10W
R578	1-216-065-00	s	METAL, CHIP 4.7K 5% 1/10W
R579	1-216-065-00	s	METAL, CHIP 4.7K 5% 1/10W
R580	1-216-065-00	s	METAL, CHIP 4.7K 5% 1/10W
R581	1-216-025-91	s	METAL 100 5% 1/10W
R582	1-216-065-00	s	METAL, CHIP 4.7K 5% 1/10W
R585	1-216-049-91	s	METAL 1K 5% 1/10W
R586	1-216-033-00	s	METAL, CHIP 220 5% 1/10W
R588	1-216-668-11	s	METAL, CHIP 5.1K 0.5% 1/10W
R589	1-216-668-11	s	METAL, CHIP 5.1K 0.5% 1/10W
R590	1-216-033-00	s	METAL, CHIP 220 5% 1/10W
R591	1-216-081-00	s	METAL, CHIP 22K 5% 1/10W
R592	1-216-069-00	s	METAL, CHIP 6.8K 5% 1/10W
R593	1-216-049-91	s	METAL 1K 5% 1/10W
R594	1-216-025-91	s	METAL 100 5% 1/10W
R595	1-216-025-91	s	METAL 100 5% 1/10W
R596	1-216-025-91	s	METAL 100 5% 1/10W
R597	1-216-025-91	s	METAL 100 5% 1/10W
R598	1-216-065-00	s	METAL, CHIP 4.7K 5% 1/10W
R599	1-216-065-00	s	METAL, CHIP 4.7K 5% 1/10W
R600	1-216-065-00	s	METAL, CHIP 4.7K 5% 1/10W
R601	1-216-065-00	s	METAL, CHIP 4.7K 5% 1/10W
R602	1-216-081-00	s	METAL, CHIP 22K 5% 1/10W
R603	1-216-676-11	s	METAL, CHIP 11K 0.5% 1/10W
R604	1-208-782-11	s	METAL, CHIP 1K 0.5% 1/10W
R605	1-208-782-11	s	METAL, CHIP 1K 0.5% 1/10W
R606	1-216-295-00	s	METAL, CHIP 0 5% 1/10W
R610	1-216-057-00	s	METAL, CHIP 2.2K 5% 1/10W
R611	1-216-057-00	s	METAL, CHIP 2.2K 5% 1/10W
R612	1-216-057-00	s	METAL, CHIP 2.2K 5% 1/10W
R614	1-216-057-00	s	METAL, CHIP 2.2K 5% 1/10W
R615	1-216-057-00	s	METAL, CHIP 2.2K 5% 1/10W
R616	1-216-057-00	s	METAL, CHIP 2.2K 5% 1/10W
R624	1-216-662-11	s	METAL, CHIP 3K 0.5% 1/10W
R627	1-216-295-00	s	METAL, CHIP 0 5% 1/10W
R628	1-216-669-11	s	METAL, CHIP 5.6K 0.5% 1/10W
R629	1-216-687-11	s	METAL, CHIP 33K 0.5% 1/10W
R630	1-216-081-00	s	METAL, CHIP 22K 5% 1/10W
R631	1-216-041-00	s	METAL, CHIP 470 5% 1/10W
R632	1-216-081-00	s	METAL, CHIP 22K 5% 1/10W
R633	1-216-073-00	s	METAL, CHIP 10K 5% 1/10W
R634	1-216-639-11	s	METAL, CHIP 330 0.5% 1/10W
R635	1-216-047-91	s	METAL 820 5% 1/10W
R636	1-216-639-11	s	METAL, CHIP 330 0.5% 1/10W
R637	1-216-041-00	s	METAL, CHIP 470 5% 1/10W
R638	1-216-678-11	s	METAL, CHIP 13K 0.5% 1/10W
R639	1-208-784-11	s	METAL, CHIP 1.2K 0.5% 1/10W
R640	1-216-081-00	s	METAL, CHIP 22K 5% 1/10W
R641	1-216-665-11	s	METAL, CHIP 3.9K 0.5% 1/10W
R643	1-216-689-11	s	METAL, CHIP 39K 0.5% 1/10W
R644	1-216-658-11	s	METAL, CHIP 2K 0.5% 1/10W

(ES-20/20P BOARD[board suffix -11])

Ref. No. or Q'ty	Part No.	SP	Description
R645	1-216-025-91	s	METAL 100 5% 1/10W
R646	1-216-121-91	s	METAL 1M 5% 1/10W
R647	1-216-097-91	s	METAL 100K 5% 1/10W
R648	1-216-049-91	s	METAL 1K 5% 1/10W
R649	1-216-662-11	s	METAL, CHIP 3K 0.5% 1/10W
R651	1-216-665-11	s	METAL, CHIP 3.9K 0.5% 1/10W
R652	1-216-057-00	s	METAL, CHIP 2.2K 5% 1/10W
R653	1-216-073-00	s	METAL, CHIP 10K 5% 1/10W
R654	1-216-638-11	s	METAL, CHIP 300 0.5% 1/10W
R655	1-216-041-00	s	METAL, CHIP 470 5% 1/10W
R656	1-216-057-00	s	METAL, CHIP 2.2K 5% 1/10W
R657	1-216-033-00	s	METAL, CHIP 220 5% 1/10W
R658	1-216-665-11	s	METAL, CHIP 3.9K 0.5% 1/10W
R659	1-216-081-00	s	METAL, CHIP 22K 5% 1/10W
R661	1-208-784-11	s	METAL, CHIP 1.2K 0.5% 1/10W
R662	1-216-689-11	s	METAL, CHIP 39K 0.5% 1/10W
R663	1-216-658-11	s	METAL, CHIP 2K 0.5% 1/10W
R664	1-216-025-91	s	METAL 100 5% 1/10W
R665	1-216-121-91	s	METAL 1M 5% 1/10W
R666	1-216-097-91	s	METAL 100K 5% 1/10W
R667	1-216-097-91	s	METAL 100K 5% 1/10W
R668	1-216-049-91	s	METAL 1K 5% 1/10W
R669	1-216-662-11	s	METAL, CHIP 3K 0.5% 1/10W
R671	1-216-668-11	s	METAL, CHIP 5.1K 0.5% 1/10W
R672	1-216-057-00	s	METAL, CHIP 2.2K 5% 1/10W
R673	1-216-073-00	s	METAL, CHIP 10K 5% 1/10W
R674	1-216-636-11	s	METAL, CHIP 240 0.5% 1/10W
R675	1-216-041-00	s	METAL, CHIP 470 5% 1/10W
R676	1-216-057-00	s	METAL, CHIP 2.2K 5% 1/10W
R677	1-216-049-91	s	METAL 1K 5% 1/10W
R678	1-216-665-11	s	METAL, CHIP 3.9K 0.5% 1/10W
R679	1-216-081-00	s	METAL, CHIP 22K 5% 1/10W
R681	1-208-784-11	s	METAL, CHIP 1.2K 0.5% 1/10W
R682	1-216-689-11	s	METAL, CHIP 39K 0.5% 1/10W
R683	1-216-658-11	s	METAL, CHIP 2K 0.5% 1/10W
R684	1-216-025-91	s	METAL 100 5% 1/10W
R685	1-216-121-91	s	METAL 1M 5% 1/10W
R686	1-216-097-91	s	METAL 100K 5% 1/10W
R687	1-216-097-91	s	METAL 100K 5% 1/10W
R688	1-216-049-91	s	METAL 1K 5% 1/10W
R689	1-216-033-00	s	METAL, CHIP 220 5% 1/10W
R690	1-216-666-11	s	METAL, CHIP 4.3K 0.5% 1/10W
R691	1-216-049-91	s	METAL 1K 5% 1/10W
R692	1-216-049-91	s	METAL 1K 5% 1/10W
R693	1-216-049-91	s	METAL 1K 5% 1/10W
R694	1-216-065-00	s	METAL, CHIP 4.7K 5% 1/10W
R695	1-216-073-00	s	METAL, CHIP 10K 5% 1/10W
R696	1-216-073-00	s	METAL, CHIP 10K 5% 1/10W
R697	1-216-073-00	s	METAL, CHIP 10K 5% 1/10W
R698	1-216-049-91	s	METAL 1K 5% 1/10W
R701	1-216-049-91	s	METAL 1K 5% 1/10W
R702	1-216-668-11	s	METAL, CHIP 5.1K 0.5% 1/10W
R703	1-216-668-11	s	METAL, CHIP 5.1K 0.5% 1/10W
R704	1-216-033-00	s	METAL, CHIP 220 5% 1/10W
R705	1-216-033-00	s	METAL, CHIP 220 5% 1/10W
R706	1-216-648-11	s	METAL, CHIP 750 0.5% 1/10W
R710	1-216-105-91	s	METAL, CHIP 220K 5% 1/10W
R711	1-216-105-91	s	METAL, CHIP 220K 5% 1/10W
R712	1-216-682-11	s	METAL, CHIP 20K 0.5% 1/10W

[for J, UC]

(ES-20/20P BOARD[board suffix -11])

Ref. No. or Q'ty	Part No.	SP	Description
R712	1-216-678-11	s	METAL, CHIP 13K 0.5% 1/10W [for CE]
R713	1-216-682-11	s	METAL, CHIP 20K 0.5% 1/10W [for J, UC]
R713	1-216-678-11	s	METAL, CHIP 13K 0.5% 1/10W [for CE]
R714	1-216-682-11	s	METAL, CHIP 20K 0.5% 1/10W [for J, UC]
R714	1-216-678-11	s	METAL, CHIP 13K 0.5% 1/10W [for CE]
R715	1-216-679-11	s	METAL, CHIP 15K 0.5% 1/10W [for J, UC]
R715	1-216-689-11	s	METAL, CHIP 39K 0.5% 1/10W [for CE]
R716	1-216-679-11	s	METAL, CHIP 15K 0.5% 1/10W [for J, UC]
R716	1-216-689-11	s	METAL, CHIP 39K 0.5% 1/10W [for CE]
R717	1-216-679-11	s	METAL, CHIP 15K 0.5% 1/10W [for J, UC]
R717	1-216-689-11	s	METAL, CHIP 39K 0.5% 1/10W [for CE]
R718	1-216-061-00	s	METAL, CHIP 3.3K 5% 1/10W [for J, UC]
R718	1-216-055-00	s	METAL, CHIP 1.8K 5% 1/10W [for CE]
R719	1-216-061-00	s	METAL, CHIP 3.3K 5% 1/10W [for J, UC]
R719	1-216-055-00	s	METAL, CHIP 1.8K 5% 1/10W [for CE]
R720	1-216-061-00	s	METAL, CHIP 3.3K 5% 1/10W [for J, UC]
R720	1-216-055-00	s	METAL, CHIP 1.8K 5% 1/10W [for CE]
R721	1-216-620-11	s	METAL, CHIP 51 0.5% 1/10W
R722	1-216-666-11	s	METAL, CHIP 4.3K 0.5% 1/10W
R723	1-216-049-91	s	METAL 1K 5% 1/10W
R724	1-216-025-91	s	METAL 100 5% 1/10W
R725	1-216-666-11	s	METAL, CHIP 4.3K 0.5% 1/10W
R726	1-216-049-91	s	METAL 1K 5% 1/10W
R727	1-216-025-91	s	METAL 100 5% 1/10W
R728	1-216-666-11	s	METAL, CHIP 4.3K 0.5% 1/10W
R729	1-216-049-91	s	METAL 1K 5% 1/10W
R730	1-216-025-91	s	METAL 100 5% 1/10W
R731	1-216-001-00	s	METAL, CHIP 10 5% 1/10W
R732	1-216-035-00	s	METAL, CHIP 270 5% 1/10W
R733	1-216-065-00	s	METAL, CHIP 4.7K 5% 1/10W
R734	1-216-005-00	s	METAL, CHIP 15 5% 1/10W
R735	1-216-027-00	s	METAL, CHIP 120 5% 1/10W
R736	1-216-660-11	s	METAL, CHIP 2.4K 0.5% 1/10W
R737	1-216-295-00	s	METAL, CHIP 0 5% 1/10W
R738	1-216-620-11	s	METAL, CHIP 51 0.5% 1/10W
R739	1-216-678-11	s	METAL, CHIP 13K 0.5% 1/10W
R741	1-216-073-00	s	METAL, CHIP 10K 5% 1/10W
R742	1-208-773-11	s	METAL, CHIP 430 0.5% 1/10W
R743	1-216-051-00	s	METAL, CHIP 1.2K 5% 1/10W
R744	1-216-061-00	s	METAL, CHIP 3.3K 5% 1/10W
R745	1-216-081-00	s	METAL, CHIP 22K 5% 1/10W
R746	1-216-089-91	s	METAL 47K 5% 1/10W
R749	1-216-614-11	s	METAL, CHIP 30 0.50% 1/10W
R750	1-216-624-11	s	METAL, CHIP 75 0.5% 1/10W
R751	1-216-063-91	s	METAL 3.9K 5% 1/10W
R752	1-216-614-11	s	METAL, CHIP 30 0.50% 1/10W

(ES-20/20P BOARD[board suffix -11])

Ref. No. or Q'ty	Part No.	SP	Description
R753	1-216-644-11	s	METAL, CHIP 510 0.5% 1/10W
R754	1-216-682-11	s	METAL, CHIP 20K 0.5% 1/10W
R755	1-216-081-00	s	METAL, CHIP 22K 5% 1/10W
R756	1-216-051-00	s	METAL, CHIP 1.2K 5% 1/10W
R757	1-216-658-11	s	METAL, CHIP 2K 0.5% 1/10W
R758	1-216-089-91	s	METAL 47K 5% 1/10W
R759	1-216-053-00	s	METAL, CHIP 1.5K 5% 1/10W
R760	1-216-658-11	s	METAL, CHIP 2K 0.5% 1/10W
R761	1-216-049-91	s	METAL 1K 5% 1/10W
R762	1-216-668-11	s	METAL, CHIP 5.1K 0.5% 1/10W
R763	1-216-662-11	s	METAL, CHIP 3K 0.5% 1/10W
R764	1-208-762-11	s	METAL, CHIP 150 0.5% 1/10W [for J, UC]
R764	1-208-764-11	s	METAL, CHIP 180 0.5% 1/10W [for CE]
R765	1-208-806-11	s	METAL, CHIP 10K 0.5% 1/10W
R766	1-216-079-00	s	METAL, CHIP 18K 5% 1/10W
R767	1-216-081-00	s	METAL, CHIP 22K 5% 1/10W
R768	1-216-089-91	s	METAL 47K 5% 1/10W
R769	1-216-073-00	s	METAL, CHIP 10K 5% 1/10W
R770	1-216-097-91	s	METAL 100K 5% 1/10W
R771	1-216-295-00	s	METAL, CHIP 0 5% 1/10W
R772	1-216-045-00	s	METAL, CHIP 680 5% 1/10W
R773	1-216-069-00	s	METAL, CHIP 6.8K 5% 1/10W
R774	1-216-612-11	s	METAL, CHIP 24 0.50% 1/10W
R775	1-216-634-11	s	METAL, CHIP 200 0.5% 1/10W
R776	1-216-664-11	s	METAL, CHIP 3.6K 0.5% 1/10W
R777	1-216-081-00	s	METAL, CHIP 22K 5% 1/10W
R778	1-216-089-91	s	METAL 47K 5% 1/10W
R779	1-216-051-00	s	METAL, CHIP 1.2K 5% 1/10W
R780	1-216-658-11	s	METAL, CHIP 2K 0.5% 1/10W
R781	1-216-053-00	s	METAL, CHIP 1.5K 5% 1/10W
R782	1-216-658-11	s	METAL, CHIP 2K 0.5% 1/10W
R783	1-216-049-91	s	METAL 1K 5% 1/10W
R784	1-216-668-11	s	METAL, CHIP 5.1K 0.5% 1/10W
R785	1-216-662-11	s	METAL, CHIP 3K 0.5% 1/10W
R786	1-208-760-11	s	METAL, CHIP 120 0.5% 1/10W [for J, UC]
R786	1-208-762-11	s	METAL, CHIP 150 0.5% 1/10W [for CE]
R787	1-208-806-11	s	METAL, CHIP 10K 0.5% 1/10W
R788	1-216-079-00	s	METAL, CHIP 18K 5% 1/10W
R789	1-216-081-00	s	METAL, CHIP 22K 5% 1/10W
R790	1-216-089-91	s	METAL 47K 5% 1/10W
R791	1-216-073-00	s	METAL, CHIP 10K 5% 1/10W
R792	1-216-097-91	s	METAL 100K 5% 1/10W
R793	1-216-005-00	s	METAL, CHIP 15 5% 1/10W
R794	1-216-071-00	s	METAL, CHIP 8.2K 5% 1/10W
R795	1-216-071-00	s	METAL, CHIP 8.2K 5% 1/10W
R796	1-216-295-00	s	METAL, CHIP 0 5% 1/10W [for J, UC]
R800	1-216-025-91	s	METAL 100 5% 1/10W
R801	1-216-051-00	s	METAL, CHIP 1.2K 5% 1/10W
R802	1-216-053-00	s	METAL, CHIP 1.5K 5% 1/10W
R803	1-216-666-11	s	METAL, CHIP 4.3K 0.5% 1/10W
R804	1-216-065-00	s	METAL, CHIP 4.7K 5% 1/10W [for J, UC]
R805	1-216-065-00	s	METAL, CHIP 4.7K 5% 1/10W
R806	1-216-666-11	s	METAL, CHIP 4.3K 0.5% 1/10W
R807	1-216-684-91	s	METAL 24K 0.50% 1/10W [for J, UC]
R809	1-216-055-00	s	METAL, CHIP 1.8K 5% 1/10W

(ES-20/20P BOARD[board suffix -11])

Ref. No. or Q'ty	Part No.	SP	Description
R810	1-216-055-00	s	METAL, CHIP 1.8K 5% 1/10W
R811	1-216-065-00	s	METAL, CHIP 4.7K 5% 1/10W
R812	1-216-675-11	s	METAL, CHIP 10K 0.5% 1/10W
R813	1-216-065-00	s	METAL, CHIP 4.7K 5% 1/10W
R814	1-216-686-11	s	METAL, CHIP 30K 0.5% 1/10W
R816	1-216-658-11	s	METAL, CHIP 2K 0.5% 1/10W
R818	1-216-668-11	s	METAL, CHIP 5.1K 0.5% 1/10W
R820	1-216-666-11	s	METAL, CHIP 4.3K 0.5% 1/10W
R821	1-216-653-11	s	METAL, CHIP 1.2K 0.5% 1/10W
R822	1-216-067-00	s	METAL, CHIP 5.6K 5% 1/10W
R823	1-216-025-91	s	METAL 100 5% 1/10W
R824	1-216-057-00	s	METAL, CHIP 2.2K 5% 1/10W
R825	1-216-662-11	s	METAL, CHIP 3K 0.5% 1/10W
R826	1-216-057-00	s	METAL, CHIP 2.2K 5% 1/10W
R827	1-216-057-00	s	METAL, CHIP 2.2K 5% 1/10W
R828	1-216-057-00	s	METAL, CHIP 2.2K 5% 1/10W
R829	1-216-057-00	s	METAL, CHIP 2.2K 5% 1/10W
R830	1-216-057-00	s	METAL, CHIP 2.2K 5% 1/10W
R831	1-208-825-11	s	METAL, CHIP 62K 0.5% 1/10W
R832	1-216-041-00	s	METAL, CHIP 470 5% 1/10W
R833	1-216-041-00	s	METAL, CHIP 470 5% 1/10W
R834	1-216-065-00	s	METAL, CHIP 4.7K 5% 1/10W
R835	1-216-055-00	s	METAL, CHIP 1.8K 5% 1/10W
R836	1-216-055-00	s	METAL, CHIP 1.8K 5% 1/10W
R837	1-216-065-00	s	METAL, CHIP 4.7K 5% 1/10W
R838	1-216-675-11	s	METAL, CHIP 10K 0.5% 1/10W
R839	1-216-065-00	s	METAL, CHIP 4.7K 5% 1/10W
R840	1-216-025-91	s	METAL 100 5% 1/10W
R841	1-216-065-00	s	METAL, CHIP 4.7K 5% 1/10W
R842	1-216-687-11	s	METAL, CHIP 33K 0.5% 1/10W
R843	1-216-651-11	s	METAL, CHIP 1K 0.5% 1/10W
R844	1-216-668-11	s	METAL, CHIP 5.1K 0.5% 1/10W
R845	1-216-033-00	s	METAL, CHIP 220 5% 1/10W
R846	1-216-067-00	s	METAL, CHIP 5.6K 5% 1/10W
R848	1-216-057-00	s	METAL, CHIP 2.2K 5% 1/10W
R849	1-216-666-11	s	METAL, CHIP 4.3K 0.5% 1/10W
R850	1-216-653-11	s	METAL, CHIP 1.2K 0.5% 1/10W
R851	1-216-660-11	s	METAL, CHIP 2.4K 0.5% 1/10W
R852	1-216-025-91	s	METAL 100 5% 1/10W
R853	1-208-791-11	s	METAL, CHIP 2.4K 0.5% 1/10W [for J, UC]
R853	1-216-057-00	s	METAL, CHIP 2.2K 5% 1/10W [for CE]
R854	1-216-057-00	s	METAL, CHIP 2.2K 5% 1/10W
R855	1-216-057-00	s	METAL, CHIP 2.2K 5% 1/10W
R856	1-216-057-00	s	METAL, CHIP 2.2K 5% 1/10W
R857	1-216-057-00	s	METAL, CHIP 2.2K 5% 1/10W
R858	1-216-658-11	s	METAL, CHIP 2K 0.5% 1/10W
R859	1-216-642-11	s	METAL, CHIP 430 0.5% 1/10W [for J, UC]
R859	1-216-648-11	s	METAL, CHIP 750 0.5% 1/10W [for CE]
R860	1-216-642-11	s	METAL, CHIP 430 0.5% 1/10W [for J, UC]
R860	1-216-648-11	s	METAL, CHIP 750 0.5% 1/10W [for CE]
R861	1-216-643-11	s	METAL, CHIP 470 0.5% 1/10W
R862	1-216-689-11	s	METAL, CHIP 39K 0.5% 1/10W [for J, UC]
R863	1-216-658-11	s	METAL, CHIP 2K 0.5% 1/10W

(ES-20/20P BOARD[board suffix -11])

Ref. No. or Q'ty	Part No.	SP	Description
R864	1-216-648-11	s	METAL, CHIP 750 0.5% 1/10W [for J, UC]
R864	1-216-647-11	s	METAL, CHIP 680 0.5% 1/10W [for CE]
R865	1-216-053-00	s	METAL, CHIP 1.5K 5% 1/10W
R866	1-216-648-11	s	METAL, CHIP 750 0.5% 1/10W [for J, UC]
R866	1-216-647-11	s	METAL, CHIP 680 0.5% 1/10W [for CE]
R867	1-216-065-00	s	METAL, CHIP 4.7K 5% 1/10W
R868	1-216-063-91	s	METAL 3.9K 5% 1/10W
R869	1-216-662-11	s	METAL, CHIP 3K 0.5% 1/10W [for J, UC]
R869	1-216-627-11	s	METAL, CHIP 100 0.5% 1/10W [for CE]
R870	1-216-662-11	s	METAL, CHIP 3K 0.5% 1/10W [for J, UC]
R871	1-216-644-11	s	METAL, CHIP 510 0.5% 1/10W [for J, UC]
R872	1-216-675-11	s	METAL, CHIP 10K 0.5% 1/10W
R873	1-216-646-11	s	METAL, CHIP 620 0.5% 1/10W
R874	1-216-659-11	s	METAL, CHIP 2.2K 0.5% 1/10W
R875	1-216-659-11	s	METAL, CHIP 2.2K 0.5% 1/10W
R876	1-216-669-11	s	METAL, CHIP 5.6K 0.5% 1/10W
R877	1-216-085-00	s	METAL, CHIP 33K 5% 1/10W
R878	1-216-651-11	s	METAL, CHIP 1K 0.5% 1/10W
R879	1-216-683-11	s	METAL, CHIP 22K 0.5% 1/10W
R880	1-216-683-11	s	METAL, CHIP 22K 0.5% 1/10W
R881	1-216-673-11	s	METAL, CHIP 8.2K 0.5% 1/10W
R882	1-216-645-11	s	METAL, CHIP 560 0.5% 1/10W [for J, UC]
R882	1-216-651-11	s	METAL, CHIP 1K 0.5% 1/10W [for CE]
R883	1-216-073-00	s	METAL, CHIP 10K 5% 1/10W
R884	1-216-687-11	s	METAL, CHIP 33K 0.5% 1/10W
R885	1-216-675-11	s	METAL, CHIP 10K 0.5% 1/10W [for J, UC]
R885	1-216-677-11	s	METAL, CHIP 12K 0.5% 1/10W [for CE]
R886	1-216-687-11	s	METAL, CHIP 33K 0.5% 1/10W
R887	1-216-668-11	s	METAL, CHIP 5.1K 0.5% 1/10W
R888	1-216-668-11	s	METAL, CHIP 5.1K 0.5% 1/10W
R889	1-216-662-11	s	METAL, CHIP 3K 0.5% 1/10W [for J, UC]
R890	1-216-636-11	s	METAL, CHIP 240 0.5% 1/10W [for J, UC]
R891	1-216-662-11	s	METAL, CHIP 3K 0.5% 1/10W [for J, UC]
R891	1-216-627-11	s	METAL, CHIP 100 0.5% 1/10W [for CE]
R892	1-216-053-00	s	METAL, CHIP 1.5K 5% 1/10W
R893	1-216-667-11	s	METAL, CHIP 4.7K 0.5% 1/10W [for J, UC]
R893	1-216-675-11	s	METAL, CHIP 10K 0.5% 1/10W [for CE]
R894	1-216-065-00	s	METAL, CHIP 4.7K 5% 1/10W
R895	1-216-687-11	s	METAL, CHIP 33K 0.5% 1/10W [for J, UC]
R896	1-216-644-11	s	METAL, CHIP 510 0.5% 1/10W [for J, UC]
R896	1-216-646-11	s	METAL, CHIP 620 0.5% 1/10W [for CE]
R897	1-216-675-11	s	METAL, CHIP 10K 0.5% 1/10W

(ES-20/20P BOARD[board suffix -11])

Ref. No. or Q'ty	Part No.	SP	Description
R898	1-216-659-11	s	METAL, CHIP 2.2K 0.5% 1/10W
R899	1-216-655-11	s	METAL, CHIP 1.5K 0.5% 1/10W
R900	1-216-669-11	s	METAL, CHIP 5.6K 0.5% 1/10W
R901	1-216-085-00	s	METAL, CHIP 33K 5% 1/10W
R902	1-216-651-11	s	METAL, CHIP 1K 0.5% 1/10W
R903	1-216-683-11	s	METAL, CHIP 22K 0.5% 1/10W
R904	1-216-683-11	s	METAL, CHIP 22K 0.5% 1/10W
R905	1-216-097-91	s	METAL 100K 5% 1/10W [for J, UC]
R906	1-216-081-00	s	METAL, CHIP 22K 5% 1/10W [for CE]
R907	1-216-065-00	s	METAL, CHIP 4.7K 5% 1/10W
R908	1-216-065-00	s	METAL, CHIP 4.7K 5% 1/10W
R909	1-216-049-91	s	METAL 1K 5% 1/10W
R910	1-216-049-91	s	METAL 1K 5% 1/10W
R911	1-216-065-00	s	METAL, CHIP 4.7K 5% 1/10W
R912	1-216-611-11	s	METAL, CHIP 22 0.5% 1/10W
R913	1-216-065-00	s	METAL, CHIP 4.7K 5% 1/10W
R914	1-216-061-00	s	METAL, CHIP 3.3K 5% 1/10W
R915	1-216-655-11	s	METAL, CHIP 1.5K 0.5% 1/10W
R916	1-216-057-00	s	METAL, CHIP 2.2K 5% 1/10W
R917	1-216-049-91	s	METAL 1K 5% 1/10W
R918	1-216-057-00	s	METAL, CHIP 2.2K 5% 1/10W
R919	1-216-073-00	s	METAL, CHIP 10K 5% 1/10W
R920	1-216-073-00	s	METAL, CHIP 10K 5% 1/10W
R921	1-216-682-11	s	METAL, CHIP 20K 0.5% 1/10W [for J, UC]
R921	1-216-680-11	s	METAL, CHIP 16K 0.5% 1/10W [for CE]
R922	1-216-067-00	s	METAL, CHIP 5.6K 5% 1/10W
R923	1-216-651-11	s	METAL, CHIP 1K 0.5% 1/10W
R924	1-216-651-11	s	METAL, CHIP 1K 0.5% 1/10W
R925	1-216-655-11	s	METAL, CHIP 1.5K 0.5% 1/10W [for J, UC]
R925	1-216-657-11	s	METAL, CHIP 1.8K 0.5% 1/10W [for CE]
R926	1-216-669-11	s	METAL, CHIP 5.6K 0.5% 1/10W
R927	1-216-669-11	s	METAL, CHIP 5.6K 0.5% 1/10W
R928	1-216-025-91	s	METAL 100 5% 1/10W
R929	1-216-057-00	s	METAL, CHIP 2.2K 5% 1/10W
R930	1-218-759-11	s	METAL, CHIP 200K 0.50% 1/10W
R931	1-216-025-91	s	METAL 100 5% 1/10W
R932	1-216-057-00	s	METAL, CHIP 2.2K 5% 1/10W
R933	1-216-057-00	s	METAL, CHIP 2.2K 5% 1/10W
R935	1-208-837-11	s	METAL, CHIP 200K 0.5% 1/10W
R936	1-208-790-11	s	METAL, CHIP 2.2K 0.5% 1/10W
R937	1-216-624-11	s	METAL, CHIP 75 0.5% 1/10W
R938	1-216-295-00	s	METAL, CHIP 0 5% 1/10W
R939	1-208-779-11	s	METAL, CHIP 750 0.5% 1/10W
R940	1-216-648-11	s	METAL, CHIP 750 0.5% 1/10W
R941	1-216-624-11	s	METAL, CHIP 75 0.5% 1/10W
R942	1-216-295-00	s	METAL, CHIP 0 5% 1/10W
R943	1-208-779-11	s	METAL, CHIP 750 0.5% 1/10W
R944	1-216-648-11	s	METAL, CHIP 750 0.5% 1/10W
R945	1-216-624-11	s	METAL, CHIP 75 0.5% 1/10W
R946	1-216-073-00	s	METAL, CHIP 10K 5% 1/10W
R947	1-216-073-00	s	METAL, CHIP 10K 5% 1/10W
R950	1-208-790-11	s	METAL, CHIP 2.2K 0.5% 1/10W
R951	1-216-624-11	s	METAL, CHIP 75 0.5% 1/10W
R952	1-216-295-00	s	METAL, CHIP 0 5% 1/10W
R953	1-208-779-11	s	METAL, CHIP 750 0.5% 1/10W

(ES-20/20P BOARD[board suffix -11])

Ref. No. or Q'ty	Part No.	SP	Description
R954	1-216-648-11	s	METAL, CHIP 750 0.5% 1/10W
R955	1-216-624-11	s	METAL, CHIP 75 0.5% 1/10W
R956	1-216-295-00	s	METAL, CHIP 0 5% 1/10W
R957	1-208-779-11	s	METAL, CHIP 750 0.5% 1/10W
R958	1-216-648-11	s	METAL, CHIP 750 0.5% 1/10W
R959	1-216-624-11	s	METAL, CHIP 75 0.5% 1/10W
R960	1-216-073-00	s	METAL, CHIP 10K 5% 1/10W
R961	1-216-073-00	s	METAL, CHIP 10K 5% 1/10W
R962	1-216-644-11	s	METAL, CHIP 510 0.5% 1/10W
R963	1-216-644-11	s	METAL, CHIP 510 0.5% 1/10W
R965	1-208-779-11	s	METAL, CHIP 750 0.5% 1/10W
R966	1-208-787-11	s	METAL, CHIP 1.6K 0.5% 1/10W [for J, UC]
R966	1-208-785-11	s	METAL, CHIP 1.3K 0.5% 1/10W [for CE]
R967	1-208-794-11	s	METAL, CHIP 3.3K 0.5% 1/10W [for J, UC]
R967	1-208-792-11	s	METAL, CHIP 2.7K 0.5% 1/10W [for CE]
R968	1-216-295-00	s	METAL, CHIP 0 5% 1/10W
R970	1-216-648-11	s	METAL, CHIP 750 0.5% 1/10W
R971	1-216-648-11	s	METAL, CHIP 750 0.5% 1/10W
R972	1-216-624-11	s	METAL, CHIP 75 0.5% 1/10W
R973	1-216-624-11	s	METAL, CHIP 75 0.5% 1/10W
R975	1-216-063-91	s	METAL 3.9K 5% 1/10W
R976	1-216-025-91	s	METAL 100 5% 1/10W
R978	1-208-788-11	s	METAL, CHIP 1.8K 0.5% 1/10W [for J, UC]
R978	1-216-658-11	s	METAL, CHIP 2K 0.5% 1/10W [for CE]
R979	1-216-648-11	s	METAL, CHIP 750 0.5% 1/10W
R980	1-216-665-11	s	METAL, CHIP 3.9K 0.5% 1/10W
R982	1-216-649-11	s	METAL, CHIP 820 0.5% 1/10W [for J, UC]
R982	1-216-648-11	s	METAL, CHIP 750 0.5% 1/10W [for CE]
R983	1-208-788-11	s	METAL, CHIP 1.8K 0.5% 1/10W [for J, UC]
R978	1-216-658-11	s	METAL, CHIP 2K 0.5% 1/10W [for CE]
R984	1-216-648-11	s	METAL, CHIP 750 0.5% 1/10W
R985	1-216-665-11	s	METAL, CHIP 3.9K 0.5% 1/10W
R987	1-216-649-11	s	METAL, CHIP 820 0.5% 1/10W [for J, UC]
R987	1-216-648-11	s	METAL, CHIP 750 0.5% 1/10W [for CE]
R988	1-218-753-11	s	METAL, CHIP 110K 0.50% 1/10W
R989	1-216-675-11	s	METAL, CHIP 10K 0.5% 1/10W
R990	1-216-659-11	s	METAL, CHIP 2.2K 0.5% 1/10W
R992	1-216-659-11	s	METAL, CHIP 2.2K 0.5% 1/10W
R993	1-216-624-11	s	METAL, CHIP 75 0.5% 1/10W
R994	1-216-670-11	s	METAL, CHIP 6.2K 0.5% 1/10W
R995	1-216-295-00	s	METAL, CHIP 0 5% 1/10W
R996	1-208-789-11	s	METAL, CHIP 2K 0.5% 1/10W
R997	1-208-789-11	s	METAL, CHIP 2K 0.5% 1/10W
R998	1-208-794-11	s	METAL, CHIP 3.3K 0.5% 1/10W [for J, UC]
R998	1-208-792-11	s	METAL, CHIP 2.7K 0.5% 1/10W [for CE]
R1000	1-216-033-00	s	METAL, CHIP 220 5% 1/10W
R1001	1-216-669-11	s	METAL, CHIP 5.6K 0.5% 1/10W

(ES-20/20P BOARD[board suffix -11])

Ref. No. or Q'ty	Part No.	SP	Description
R1002	1-216-689-11	s	METAL, CHIP 39K 0.5% 1/10W
R1003	1-216-073-00	s	METAL, CHIP 10K 5% 1/10W
R1004	1-216-033-00	s	METAL, CHIP 220 5% 1/10W
R1005	1-216-669-11	s	METAL, CHIP 5.6K 0.5% 1/10W
R1006	1-216-689-11	s	METAL, CHIP 39K 0.5% 1/10W
R1007	1-216-073-00	s	METAL, CHIP 10K 5% 1/10W
R1008	1-216-033-00	s	METAL, CHIP 220 5% 1/10W
R1009	1-216-669-11	s	METAL, CHIP 5.6K 0.5% 1/10W
R1010	1-216-689-11	s	METAL, CHIP 39K 0.5% 1/10W
R1011	1-216-073-00	s	METAL, CHIP 10K 5% 1/10W
R1012	1-216-033-00	s	METAL, CHIP 220 5% 1/10W
R1013	1-216-669-11	s	METAL, CHIP 5.6K 0.5% 1/10W
R1014	1-216-085-00	s	METAL, CHIP 33K 5% 1/10W
R1015	1-216-073-00	s	METAL, CHIP 10K 5% 1/10W
R1017	1-216-025-91	s	METAL 100 5% 1/10W
R1018	1-216-025-91	s	METAL 100 5% 1/10W
R1019	1-216-025-91	s	METAL 100 5% 1/10W
R1020	1-216-025-91	s	METAL 100 5% 1/10W
R1021	1-216-061-00	s	METAL, CHIP 3.3K 5% 1/10W
R1022	1-216-033-00	s	METAL, CHIP 220 5% 1/10W
R1023	1-216-663-11	s	METAL, CHIP 3.3K 0.5% 1/10W
R1024	1-216-689-11	s	METAL, CHIP 39K 0.5% 1/10W
R1025	1-216-073-00	s	METAL, CHIP 10K 5% 1/10W
R1026	1-216-081-00	s	METAL, CHIP 22K 5% 1/10W
R1027	1-216-057-00	s	METAL, CHIP 2.2K 5% 1/10W
R1028	1-216-033-00	s	METAL, CHIP 220 5% 1/10W
R1029	1-216-666-11	s	METAL, CHIP 4.3K 0.5% 1/10W
R1030	1-216-689-11	s	METAL, CHIP 39K 0.5% 1/10W
R1031	1-216-073-00	s	METAL, CHIP 10K 5% 1/10W
R1032	1-216-081-00	s	METAL, CHIP 22K 5% 1/10W
R1033	1-216-057-00	s	METAL, CHIP 2.2K 5% 1/10W
R1034	1-216-033-00	s	METAL, CHIP 220 5% 1/10W
R1035	1-216-663-11	s	METAL, CHIP 3.3K 0.5% 1/10W
R1036	1-216-689-11	s	METAL, CHIP 39K 0.5% 1/10W
R1037	1-216-073-00	s	METAL, CHIP 10K 5% 1/10W
R1038	1-216-081-00	s	METAL, CHIP 22K 5% 1/10W
R1039	1-216-057-00	s	METAL, CHIP 2.2K 5% 1/10W
R1040	1-216-033-00	s	METAL, CHIP 220 5% 1/10W
R1041	1-216-666-11	s	METAL, CHIP 4.3K 0.5% 1/10W
R1042	1-216-689-11	s	METAL, CHIP 39K 0.5% 1/10W
R1043	1-216-073-00	s	METAL, CHIP 10K 5% 1/10W
R1044	1-216-081-00	s	METAL, CHIP 22K 5% 1/10W
R1045	1-216-057-00	s	METAL, CHIP 2.2K 5% 1/10W
R1046	1-216-627-11	s	METAL, CHIP 100 0.5% 1/10W
R1047	1-216-627-11	s	METAL, CHIP 100 0.5% 1/10W
R1048	1-216-627-11	s	METAL, CHIP 100 0.5% 1/10W
R1049	1-216-627-11	s	METAL, CHIP 100 0.5% 1/10W
R1050	1-216-067-00	s	METAL, CHIP 5.6K 5% 1/10W
R1051	1-216-025-91	s	METAL 100 5% 1/10W
R1052	1-216-073-00	s	METAL, CHIP 10K 5% 1/10W
R1053	1-216-651-11	s	METAL, CHIP 1K 0.5% 1/10W
R1054	1-216-689-11	s	METAL, CHIP 39K 0.5% 1/10W
R1055	1-216-057-00	s	METAL, CHIP 2.2K 5% 1/10W
R1056	1-216-073-00	s	METAL, CHIP 10K 5% 1/10W
R1057	1-216-295-00	s	METAL, CHIP 0 5% 1/10W [for CE]
R1058	1-216-059-00	s	METAL, CHIP 2.7K 5% 1/10W
R1059	1-216-073-00	s	METAL, CHIP 10K 5% 1/10W
R1060	1-216-033-00	s	METAL, CHIP 220 5% 1/10W
R1061	1-216-073-00	s	METAL, CHIP 10K 5% 1/10W

(ES-20/20P BOARD[board suffix -11])

Ref. No. or Q'ty	Part No.	SP	Description
R1062	1-216-089-91	s	METAL 47K 5% 1/10W
R1063	1-216-081-00	s	METAL, CHIP 22K 5% 1/10W
R1064	1-216-642-11	s	METAL, CHIP 430 0.5% 1/10W
R1066	1-216-065-00	s	METAL, CHIP 4.7K 5% 1/10W
R1067	1-216-055-00	s	METAL, CHIP 1.8K 5% 1/10W
R1068	1-216-055-00	s	METAL, CHIP 1.8K 5% 1/10W
R1069	1-216-025-91	s	METAL 100 5% 1/10W
R1070	1-208-798-11	s	METAL, CHIP 4.7K 0.5% 1/10W
R1071	1-216-651-11	s	METAL, CHIP 1K 0.5% 1/10W
R1072	1-216-667-11	s	METAL, CHIP 4.7K 0.5% 1/10W
R1073	1-208-779-11	s	METAL, CHIP 750 0.5% 1/10W
R1074	1-208-787-11	s	METAL, CHIP 1.6K 0.5% 1/10W
R1075	1-216-295-00	s	METAL, CHIP 0 5% 1/10W
R1076	1-216-648-11	s	METAL, CHIP 750 0.5% 1/10W
R1077	1-216-648-11	s	METAL, CHIP 750 0.5% 1/10W
R1078	1-216-624-11	s	METAL, CHIP 75 0.5% 1/10W
R1079	1-216-624-11	s	METAL, CHIP 75 0.5% 1/10W
R1080	1-216-675-11	s	METAL, CHIP 10K 0.5% 1/10W
R1081	1-216-675-11	s	METAL, CHIP 10K 0.5% 1/10W
R1082	1-216-675-11	s	METAL, CHIP 10K 0.5% 1/10W
R1083	1-216-675-11	s	METAL, CHIP 10K 0.5% 1/10W
R1084	1-216-675-11	s	METAL, CHIP 10K 0.5% 1/10W
R1085	1-216-675-11	s	METAL, CHIP 10K 0.5% 1/10W
R1086	1-216-682-11	s	METAL, CHIP 20K 0.5% 1/10W
R1087	1-216-025-91	s	METAL 100 5% 1/10W
R1088	1-216-025-91	s	METAL 100 5% 1/10W
R1089	1-216-679-11	s	METAL, CHIP 15K 0.5% 1/10W
R1090	1-216-673-11	s	METAL, CHIP 8.2K 0.5% 1/10W
R1091	1-216-668-11	s	METAL, CHIP 5.1K 0.5% 1/10W
R1092	1-216-683-11	s	METAL, CHIP 22K 0.5% 1/10W
R1093	1-216-085-00	s	METAL, CHIP 33K 5% 1/10W
R1094	1-216-085-00	s	METAL, CHIP 33K 5% 1/10W
R1095	1-216-009-00	s	METAL, CHIP 22 5% 1/10W
R1096	1-216-009-00	s	METAL, CHIP 22 5% 1/10W
R1097	1-216-049-91	s	METAL 1K 5% 1/10W
R1098	1-216-085-00	s	METAL, CHIP 33K 5% 1/10W
R1099	1-216-073-00	s	METAL, CHIP 10K 5% 1/10W
R1100	1-216-085-00	s	METAL, CHIP 33K 5% 1/10W
R1101	1-216-687-11	s	METAL, CHIP 33K 0.5% 1/10W
R1102	1-216-687-11	s	METAL, CHIP 33K 0.5% 1/10W
R1103	1-216-073-00	s	METAL, CHIP 10K 5% 1/10W
R1104	1-216-664-11	s	METAL, CHIP 3.6K 0.5% 1/10W
R1105	1-208-787-11	s	METAL 1.6K 0.50% 1/10W
R1106	1-216-073-00	s	METAL, CHIP 10K 5% 1/10W
R1107	1-216-075-00	s	METAL, CHIP 12K 5% 1/10W
R1108	1-216-067-00	s	METAL, CHIP 5.6K 5% 1/10W
R1109	1-216-073-00	s	METAL, CHIP 10K 5% 1/10W
R1110	1-216-677-11	s	METAL, CHIP 12K 0.5% 1/10W
R1111	1-216-679-11	s	METAL, CHIP 15K 0.5% 1/10W
R1112	1-216-664-11	s	METAL, CHIP 3.6K 0.5% 1/10W
R1113	1-208-787-11	s	METAL 1.6K 0.50% 1/10W
R1114	1-216-683-11	s	METAL, CHIP 22K 0.5% 1/10W
R1115	1-216-683-11	s	METAL, CHIP 22K 0.5% 1/10W
R1118	1-216-073-00	s	METAL, CHIP 10K 5% 1/10W
R1121	1-216-295-00	s	METAL, CHIP 0 5% 1/10W [for CE]
R1122	1-216-295-00	s	METAL, CHIP 0 5% 1/10W
R1123	1-216-295-00	s	METAL, CHIP 0 5% 1/10W
R1124	1-216-295-00	s	METAL, CHIP 0 5% 1/10W
R1125	1-216-295-00	s	METAL, CHIP 0 5% 1/10W

(ES-20/20P BOARD[board suffix -11])

Ref. No. or Q'ty	Part No.	SP	Description
R1126	1-216-097-91	s	METAL 100K 5% 1/10W
R1127	1-216-097-91	s	METAL 100K 5% 1/10W
R1128	1-216-097-91	s	METAL 100K 5% 1/10W
R1129	1-216-049-91	s	METAL 1K 5% 1/10W
R1130	1-216-073-00	s	METAL, CHIP 10K 5% 1/10W
R1131	1-216-025-91	s	METAL 100 5% 1/10W
R1132	1-216-065-00	s	METAL, CHIP 4.7K 5% 1/10W
R1133	1-216-025-91	s	METAL 100 5% 1/10W
R1134	1-216-065-00	s	METAL, CHIP 4.7K 5% 1/10W
R1135	1-216-025-91	s	METAL 100 5% 1/10W
R1136	1-216-065-00	s	METAL, CHIP 4.7K 5% 1/10W
R1137	1-216-025-91	s	METAL 100 5% 1/10W
R1138	1-216-065-00	s	METAL, CHIP 4.7K 5% 1/10W
R1139	1-216-025-91	s	METAL 100 5% 1/10W
R1140	1-216-065-00	s	METAL, CHIP 4.7K 5% 1/10W
R1141	1-216-025-91	s	METAL 100 5% 1/10W
R1142	1-216-065-00	s	METAL, CHIP 4.7K 5% 1/10W
R1143	1-216-073-00	s	METAL, CHIP 10K 5% 1/10W
R1144	1-216-073-00	s	METAL, CHIP 10K 5% 1/10W
R1145	1-216-073-00	s	METAL, CHIP 10K 5% 1/10W
R1146	1-216-073-00	s	METAL, CHIP 10K 5% 1/10W
R1147	1-216-097-91	s	METAL 100K 5% 1/10W
R1148	1-216-009-00	s	METAL, CHIP 22 5% 1/10W
R1149	1-216-097-91	s	METAL 100K 5% 1/10W
R1150	1-216-097-91	s	METAL 100K 5% 1/10W
R1151	1-216-097-91	s	METAL 100K 5% 1/10W
R1152	1-208-781-11	s	METAL, CHIP 910 0.5% 1/10W
RV1	1-237-037-11	s	RES, ADJ, METAL 20K
RV2	1-237-036-11	s	RES, ADJ, METAL 10K
RV3	1-237-036-11	s	RES, ADJ, METAL 10K
RV4	1-237-034-11	s	RES, ADJ, METAL 2K
RV5	1-237-037-11	s	RES, ADJ, METAL 20K
RV6	1-241-265-11	s	RES, ADJ, METAL 20K
RV7	1-241-265-11	s	RES, ADJ, METAL 20K
RV500	1-237-030-11	s	RES, ADJ, METAL 100 [for J, UC]
RV500	1-237-031-11	s	RES, ADJ, METAL 200 [for CE]
RV501	1-237-039-11	s	RES, ADJ, METAL 100K
RV502	1-237-032-11	s	RES, ADJ, METAL 500
RV503	1-237-039-11	s	RES, ADJ, METAL 100K
RV504	1-237-032-11	s	RES, ADJ, METAL 500
RV505	1-237-030-11	s	RES, ADJ, METAL 100 [for J, UC]
RV505	1-237-031-11	s	RES, ADJ, METAL 200 [for CE]
RV506	1-237-034-11	s	RES, ADJ, METAL 2K
RV507	1-237-033-11	s	RES, ADJ, METAL 1K
RV508	1-237-031-11	s	RES, ADJ, METAL 200
RV509	1-237-032-11	s	RES, ADJ, METAL 500
RV510	1-237-031-11	s	RES, ADJ, METAL 200
RV511	1-237-039-11	s	RES, ADJ, METAL 100K
RV512	1-237-032-11	s	RES, ADJ, METAL 500
RV513	1-237-031-11	s	RES, ADJ, METAL 200
RV514	1-237-039-11	s	RES, ADJ, METAL 100K
RV515	1-237-034-11	s	RES, ADJ, METAL 2K
RV800	1-237-036-11	s	RES, ADJ, METAL 10K [for J, UC]
RV801	1-237-035-11	s	RES, ADJ, METAL 5K
RV802	1-237-033-11	s	RES, ADJ, METAL 1K
RV803	1-237-035-11	s	RES, ADJ, METAL 5K
RV804	1-237-033-11	s	RES, ADJ, METAL 1K
RV805	1-237-035-11	s	RES, ADJ, METAL 5K

(ES-20/20P BOARD[board suffix -11])

Ref. No. or Q'ty	Part No.	SP	Description
RV806	1-237-032-11	s	RES, ADJ, METAL 500
RV807	1-237-036-11	s	RES, ADJ, METAL 10K
RV808	1-237-032-11	s	RES, ADJ, METAL 500
RV809	1-237-035-11	s	RES, ADJ, METAL 5K
RV810	1-237-033-11	s	RES, ADJ, METAL 1K
RV811	1-237-033-11	s	RES, ADJ, METAL 1K
RV812	1-237-033-11	s	RES, ADJ, METAL 1K
RV813	1-237-032-11	s	RES, ADJ, METAL 500
RV1000	1-237-037-11	s	RES, ADJ, METAL 20K
RV1001	1-237-036-11	s	RES, ADJ, METAL 10K
S1	1-572-342-11	s	SWITCH, SLIDE [for J, UC]
S2	1-572-658-21	s	SWITCH, ROTARY
S3	1-571-259-11	s	SWITCH, SLIDE
S4	1-570-857-11	s	SWITCH, SLIDE [for J, UC]
S800	1-571-395-11	s	SWITCH, SLIDE
S801	1-571-395-11	s	SWITCH, SLIDE
S1000	1-564-948-21	o	CONNECTOR, 3P MALE

ES-20/20P BOARD[board suffix -12]

Ref. No. or Q'ty	Part No.	SP	Description
1pc	A-8315-061-C	o	MOUNTED CIRCUIT BOARD, ES-20 (DU-33 board is included)[for J]
1pc	A-8315-041-C	o	MOUNTED CIRCUIT BOARD, ES-20 (DU-33 board is included)[for UC]
1pc	A-8315-066-C	o	MOUNTED CIRCUIT BOARD, ES-20P (DU-33 board is included) [for CE]
1pc	2-251-622-01	o	LEVER, PC BOARD
1pc	7-682-903-01	s	SCREW +PWH 3X5
3pcs	3-719-381-21	s	SCREW (M2X6)
2pcs	2-532-915-00	o	SUPPORT (B), F.E PC BOARD
4pcs	7-621-772-18	s	SCREW +B 2X4
1pc	1-958-963-11	o	HARNESS, SUB (WIDE ID)
1pc	1-562-579-21	s	PLUG, SHORTING
C1	1-104-851-11	s	TANTALUM, CHIP 10uF 20% 10V
C2	1-113-985-11	s	TANTALUM, CHIP 10uF 20% 20V
C3	1-163-038-00	s	CERAMIC, CHIP 0.1uF 25V
C4	1-126-391-11	s	ELECT 47uF 20% 6.3V
C5	1-128-453-21	s	ELECT 47uF 20% 6.3V
C6	1-163-251-11	s	CERAMIC, CHIP 100PF 5% 50V
C7	1-163-231-11	s	CERAMIC, CHIP 15PF 5% 50V
C8	1-163-038-00	s	CERAMIC, CHIP 0.1uF 25V
C9	1-126-394-11	s	ELECT, CHIP 10uF 20% 16V
C10	1-113-991-11	s	TANTALUM, CHIP 33uF 20% 16V
C11	1-163-113-00	s	CERAMIC, CHIP 68PF 5% 50V [for J,UC]
C11	1-163-239-11	s	CERAMIC, CHIP 33PF 5% 50V [for CE]
C12	1-135-073-00	s	TANTALUM, CHIP 0.33uF 10% 35V
C13	1-163-241-11	s	CERAMIC, CHIP 39PF 5% 50V
C14	1-163-038-00	s	CERAMIC, CHIP 0.1uF 25V
C15	1-163-038-00	s	CERAMIC, CHIP 0.1uF 25V
C16	1-135-210-11	s	TANTALUM, CHIP 4.7uF 20% 10V
C17	1-163-021-91	s	CERAMIC 0.01uF 10% 50V
C18	1-163-038-00	s	CERAMIC, CHIP 0.1uF 25V
C19	1-163-038-00	s	CERAMIC, CHIP 0.1uF 25V
C20	1-126-391-11	s	ELECT 47uF 20% 6.3V
C21	1-163-038-00	s	CERAMIC, CHIP 0.1uF 25V
C22	1-163-257-11	s	CERAMIC, CHIP 180PF 5% 50V
C23	1-163-127-00	s	CERAMIC, CHIP 270PF 5% 50V
C27	1-163-235-11	s	CERAMIC, CHIP 22PF 5% 50V
C29	1-163-135-00	s	CERAMIC, CHIP 560PF 5% 50V
C32	1-163-133-00	s	CERAMIC, CHIP 470PF 5% 50V
C33	1-164-161-11	s	CERAMIC, CHIP 0.0022uF 10% 50V
C34	1-104-851-11	s	TANTALUM, CHIP 10uF 20% 10V
C35	1-163-038-00	s	CERAMIC, CHIP 0.1uF 25V
C36	1-163-125-00	s	CERAMIC, CHIP 220PF 5% 50V
C37	1-163-019-00	s	CERAMIC, CHIP 0.0068uF 10% 50V
C38	1-104-851-11	s	TANTALUM, CHIP 10uF 20% 10V
C39	1-135-070-00	s	TANTALUM, CHIP 0.1uF 10% 35V
C40	1-163-253-11	s	CERAMIC, CHIP 120PF 5% 50V
C41	1-163-251-11	s	CERAMIC, CHIP 100PF 5% 50V
C42	1-163-241-11	s	CERAMIC, CHIP 39PF 5% 50V
C43	1-163-087-00	s	CERAMIC, CHIP 4PF 0.25PF 50V
C44	1-163-239-11	s	CERAMIC, CHIP 33PF 5% 50V
C45	1-126-391-11	s	ELECT 47uF 20% 6.3V
C46	1-163-038-00	s	CERAMIC, CHIP 0.1uF 25V
C47	1-126-391-11	s	ELECT 47uF 20% 6.3V
C48	1-163-038-00	s	CERAMIC, CHIP 0.1uF 25V
C49	1-163-241-11	s	CERAMIC, CHIP 39PF 5% 50V

(ES-20/20P BOARD[board suffix -12])

Ref. No. or Q'ty	Part No.	SP	Description
C51	1-163-233-11	s	CERAMIC 18PF 5% 50V [for J,UC]
C51	1-163-239-11	s	CERAMIC, CHIP 33PF 5% 50V [for CE]
C52	1-163-253-11	s	CERAMIC, CHIP 120PF 5% 50V [for J,UC]
C52	1-163-127-00	s	CERAMIC, CHIP 270PF 5% 50V [for CE]
C55	1-163-251-11	s	CERAMIC, CHIP 100PF 5% 50V
C56	1-113-985-11	s	TANTALUM, CHIP 10uF 20% 20V
C57	1-163-231-11	s	CERAMIC, CHIP 15PF 5% 50V
C58	1-163-021-91	s	CERAMIC 0.01uF 10% 50V
C59	1-126-393-11	s	ELECT, CHIP 33uF 20% 10V
C60	1-163-038-00	s	CERAMIC, CHIP 0.1uF 25V
C61	1-163-038-00	s	CERAMIC, CHIP 0.1uF 25V
C62	1-104-851-11	s	TANTALUM, CHIP 10uF 20% 10V
C63	1-135-177-21	s	TANTALUM, CHIP 1uF 10% 25V
C64	1-163-021-91	s	CERAMIC 0.01uF 10% 50V
C65	1-163-021-91	s	CERAMIC 0.01uF 10% 50V
C66	1-126-395-11	s	ELECT 22uF 20% 16V
C67	1-126-395-11	s	ELECT 22uF 20% 16V
C68	1-104-851-11	s	TANTALUM, CHIP 10uF 20% 10V
C69	1-163-021-91	s	CERAMIC 0.01uF 10% 50V
C70	1-135-210-11	s	TANTALUM, CHIP 4.7uF 20% 10V
C71	1-113-642-11	s	TANTALUM, CHIP 47uF 20% 10V
C72	1-104-851-11	s	TANTALUM, CHIP 10uF 20% 10V
C73	1-163-021-91	s	CERAMIC 0.01uF 10% 50V
C74	1-104-851-11	s	TANTALUM, CHIP 10uF 20% 10V
C75	1-163-038-00	s	CERAMIC, CHIP 0.1uF 25V
C76	1-163-038-00	s	CERAMIC, CHIP 0.1uF 25V
C77	1-163-038-00	s	CERAMIC, CHIP 0.1uF 25V
C78	1-104-851-11	s	TANTALUM, CHIP 10uF 20% 10V
C79	1-163-021-91	s	CERAMIC 0.01uF 10% 50V
C80	1-163-038-00	s	CERAMIC, CHIP 0.1uF 25V
C81	1-113-994-11	s	TANTALUM, CHIP 6.8uF 20% 16V
C82	1-163-038-00	s	CERAMIC, CHIP 0.1uF 25V
C83	1-163-235-11	s	CERAMIC, CHIP 22PF 5% 50V
C84	1-163-038-00	s	CERAMIC, CHIP 0.1uF 25V
C85	1-163-038-00	s	CERAMIC, CHIP 0.1uF 25V
C86	1-113-994-11	s	TANTALUM, CHIP 6.8uF 20% 16V
C87	1-163-235-11	s	CERAMIC, CHIP 22PF 5% 50V
C88	1-163-038-00	s	CERAMIC, CHIP 0.1uF 25V
C89	1-163-135-00	s	CERAMIC, CHIP 560PF 5% 50V
C90	1-104-850-11	s	TANTALUM, CHIP 6.8uF 10% 10V
C91	1-163-038-00	s	CERAMIC, CHIP 0.1uF 25V
C92	1-163-038-00	s	CERAMIC, CHIP 0.1uF 25V
C93	1-163-038-00	s	CERAMIC, CHIP 0.1uF 25V
C94	1-163-038-00	s	CERAMIC, CHIP 0.1uF 25V
C95	1-163-243-11	s	CERAMIC, CHIP 47PF 5% 50V
C96	1-163-038-00	s	CERAMIC, CHIP 0.1uF 25V
C97	1-163-038-00	s	CERAMIC, CHIP 0.1uF 25V
C98	1-163-038-00	s	CERAMIC, CHIP 0.1uF 25V
C99	1-163-038-00	s	CERAMIC, CHIP 0.1uF 25V
C100	1-163-038-00	s	CERAMIC, CHIP 0.1uF 25V
C101	1-113-642-11	s	TANTALUM, CHIP 47uF 20% 10V
C102	1-127-531-11	s	ELECT 33uF 20% 16V
C103	1-113-642-11	s	TANTALUM, CHIP 47uF 20% 10V
C104	1-113-577-11	s	ELECT 47uF 20% 16V
C105	1-113-500-11	s	TANTALUM, CHIP 100uF 20% 10V
C106	1-113-642-11	s	TANTALUM, CHIP 47uF 20% 10V
C107	1-163-133-00	s	CERAMIC, CHIP 470PF 5% 50V

(ES-20/20P BOARD[board suffix -12])

Ref. No. or Q'ty	Part No.	SP	Description
C108	1-163-251-11	s	CERAMIC, CHIP 100PF 5% 50V
C109	1-163-121-00	s	CERAMIC, CHIP 150PF 5% 50V
C110	1-104-851-11	s	TANTALUM, CHIP 10uF 20% 10V
C111	1-113-577-11	s	ELECT 47uF 20% 16V
C112	1-113-500-11	s	TANTALUM, CHIP 100uF 20% 10V
C113	1-113-500-11	s	TANTALUM, CHIP 100uF 20% 10V
C114	1-113-642-11	s	TANTALUM, CHIP 47uF 20% 10V
C115	1-113-500-11	s	TANTALUM, CHIP 100uF 20% 10V
C116	1-113-500-11	s	TANTALUM, CHIP 100uF 20% 10V
C117	1-113-500-11	s	TANTALUM, CHIP 100uF 20% 10V
C500	1-104-608-11	s	ELECT, CHIP 33uF 20% 6.3V
C501	1-126-391-11	s	ELECT 47uF 20% 6.3V
C502	1-163-038-00	s	CERAMIC, CHIP 0.1uF 25V
C503	1-126-391-11	s	ELECT 47uF 20% 6.3V
C504	1-163-038-00	s	CERAMIC, CHIP 0.1uF 25V
C505	1-163-227-11	s	CERAMIC, CHIP 10PF 0.5PF 50V
C507	1-126-391-11	s	ELECT 47uF 20% 6.3V
C508	1-126-391-11	s	ELECT 47uF 20% 6.3V
C509	1-163-038-00	s	CERAMIC, CHIP 0.1uF 25V
C510	1-126-391-11	s	ELECT 47uF 20% 6.3V
C511	1-163-038-00	s	CERAMIC, CHIP 0.1uF 25V
C513	1-128-594-11	s	ELECT 1uF 20% 50V
C515	1-163-038-00	s	CERAMIC, CHIP 0.1uF 25V
C516	1-104-913-11	s	TANTALUM, CHIP 10uF 20% 16V
C517	1-163-235-11	s	CERAMIC, CHIP 22PF 5% 50V
C518	1-163-235-11	s	CERAMIC, CHIP 22PF 5% 50V
C519	1-163-235-11	s	CERAMIC, CHIP 22PF 5% 50V
C520	1-126-391-11	s	ELECT 47uF 20% 6.3V
C521	1-163-038-00	s	CERAMIC, CHIP 0.1uF 25V
C522	1-126-391-11	s	ELECT 47uF 20% 6.3V
C523	1-163-038-00	s	CERAMIC, CHIP 0.1uF 25V
C524	1-163-233-11	s	CERAMIC 18PF 5% 50V
C525	1-163-121-00	s	CERAMIC, CHIP 150PF 5% 50V
C530	1-163-038-00	s	CERAMIC, CHIP 0.1uF 25V
C531	1-163-038-00	s	CERAMIC, CHIP 0.1uF 25V
C532	1-104-913-11	s	TANTALUM, CHIP 10uF 20% 16V
C533	1-104-852-11	s	TANTALUM, CHIP 22uF 20% 10V
C534	1-163-038-00	s	CERAMIC, CHIP 0.1uF 25V
C535	1-104-852-11	s	TANTALUM, CHIP 22uF 20% 10V
C536	1-126-396-11	s	ELECT, CHIP 47uF 20% 16V
C537	1-163-038-00	s	CERAMIC, CHIP 0.1uF 25V
C538	1-126-396-11	s	ELECT, CHIP 47uF 20% 16V
C539	1-163-038-00	s	CERAMIC, CHIP 0.1uF 25V
C540	1-163-021-91	s	CERAMIC 0.01uF 10% 50V
C541	1-163-021-91	s	CERAMIC 0.01uF 10% 50V
C542	1-104-608-11	s	ELECT, CHIP 33uF 20% 6.3V
C550	1-163-038-00	s	CERAMIC, CHIP 0.1uF 25V
C551	1-163-217-11	s	CERAMIC, CHIP 1PF 50V
C552	1-126-391-11	s	ELECT 47uF 20% 6.3V
C553	1-163-038-00	s	CERAMIC, CHIP 0.1uF 25V
C554	1-135-259-11	s	TANTALUM, CHIP 10uF 20% 6.3V
C555	1-163-220-11	s	CERAMIC, CHIP 3PF 50V [for CE]
C556	1-163-038-00	s	CERAMIC, CHIP 0.1uF 25V
C557	1-126-391-11	s	ELECT 47uF 20% 6.3V
C558	1-135-259-11	s	TANTALUM, CHIP 10uF 20% 6.3V
C559	1-163-038-00	s	CERAMIC, CHIP 0.1uF 25V
C560	1-135-259-11	s	TANTALUM, CHIP 10uF 20% 6.3V
C562	1-126-391-11	s	ELECT 47uF 20% 6.3V
C563	1-163-087-00	s	CERAMIC, CHIP 4PF 0.25PF 50V [for J,UC]

(ES-20/20P BOARD[board suffix -12])

Ref. No. or Q'ty	Part No.	SP	Description
C563	1-163-089-00	s	CERAMIC, CHIP 6PF 0.5PF 50V [for CE]
C564	1-163-038-00	s	CERAMIC, CHIP 0.1uF 25V
C565	1-135-259-11	s	TANTALUM, CHIP 10uF 20% 6.3V
C566	1-163-038-00	s	CERAMIC, CHIP 0.1uF 25V
C567	1-126-391-11	s	ELECT 47uF 20% 6.3V
C568	1-135-259-11	s	TANTALUM, CHIP 10uF 20% 6.3V
C569	1-163-038-00	s	CERAMIC, CHIP 0.1uF 25V
C570	1-135-259-11	s	TANTALUM, CHIP 10uF 20% 6.3V
C572	1-126-391-11	s	ELECT 47uF 20% 6.3V
C573	1-163-038-00	s	CERAMIC, CHIP 0.1uF 25V
C574	1-163-217-11	s	CERAMIC, CHIP 1PF 50V [for J,UC]
C574	1-163-222-11	s	CERAMIC, CHIP 5PF 0.5PF 50V [for CE]
C575	1-135-259-11	s	TANTALUM, CHIP 10uF 20% 6.3V
C576	1-163-038-00	s	CERAMIC, CHIP 0.1uF 25V
C577	1-126-391-11	s	ELECT 47uF 20% 6.3V
C578	1-135-259-11	s	TANTALUM, CHIP 10uF 20% 6.3V
C579	1-163-038-00	s	CERAMIC, CHIP 0.1uF 25V
C580	1-135-259-11	s	TANTALUM, CHIP 10uF 20% 6.3V
C581	1-163-263-11	s	CERAMIC, CHIP 330PF 5% 50V
C582	1-163-133-00	s	CERAMIC, CHIP 470PF 5% 50V
C583	1-163-249-11	s	CERAMIC, CHIP 82PF 5% 50V
C584	1-128-594-11	s	ELECT 1uF 20% 50V
C585	1-128-594-11	s	ELECT 1uF 20% 50V
C586	1-113-642-11	s	TANTALUM, CHIP 47uF 20% 10V
C587	1-113-642-11	s	TANTALUM, CHIP 47uF 20% 10V
C588	1-113-642-11	s	TANTALUM, CHIP 47uF 20% 10V
C589	1-113-642-11	s	TANTALUM, CHIP 47uF 20% 10V
C590	1-163-038-00	s	CERAMIC, CHIP 0.1uF 25V
C591	1-163-038-00	s	CERAMIC, CHIP 0.1uF 25V
C592	1-104-752-11	s	TANTALUM, CHIP 33uF 20% 6.3V
C593	1-104-752-11	s	TANTALUM, CHIP 33uF 20% 6.3V
C800	1-126-391-11	s	ELECT 47uF 20% 6.3V
C801	1-126-390-11	s	ELECT, CHIP 22uF 20% 6.3V
C802	1-163-038-00	s	CERAMIC, CHIP 0.1uF 25V
C803	1-163-038-00	s	CERAMIC, CHIP 0.1uF 25V
C805	1-163-089-00	s	CERAMIC, CHIP 6PF 0.5PF 50V [for J,UC]
C805	1-163-231-11	s	CERAMIC, CHIP 15PF 5% 50V [for CE]
C806	1-163-239-11	s	CERAMIC, CHIP 33PF 5% 50V [for J,UC]
C806	1-163-113-00	s	CERAMIC, CHIP 68PF 5% 50V [for CE]
C807	1-163-089-00	s	CERAMIC, CHIP 6PF 0.5PF 50V
C809	1-163-087-00	s	CERAMIC, CHIP 4PF 0.25PF 50V [for J,UC]
C809	1-163-220-11	s	CERAMIC, CHIP 3PF 50V [for CE]
C813	1-163-089-00	s	CERAMIC, CHIP 6PF 0.5PF 50V [for J,UC]
C813	1-163-231-11	s	CERAMIC, CHIP 15PF 5% 50V [for CE]
C814	1-163-239-11	s	CERAMIC, CHIP 33PF 5% 50V [for J,UC]
C814	1-163-113-00	s	CERAMIC, CHIP 68PF 5% 50V [for CE]
C821	1-163-038-00	s	CERAMIC, CHIP 0.1uF 25V
C822	1-126-390-11	s	ELECT, CHIP 22uF 20% 6.3V
C823	1-126-393-11	s	ELECT, CHIP 33uF 20% 10V
C824	1-126-390-11	s	ELECT, CHIP 22uF 20% 6.3V
C825	1-163-038-00	s	CERAMIC, CHIP 0.1uF 25V
C826	1-163-038-00	s	CERAMIC, CHIP 0.1uF 25V

(ES-20/20P BOARD[board suffix -12])

Ref. No. or Q'ty	Part No.	SP	Description
C829	1-163-239-11	s	CERAMIC, CHIP 33PF 5% 50V
C830	1-163-239-11	s	CERAMIC, CHIP 33PF 5% 50V
C831	1-163-038-00	s	CERAMIC, CHIP 0.1uF 25V
C832	1-126-394-11	s	ELECT, CHIP 10uF 20% 16V
C833	1-163-251-11	s	CERAMIC, CHIP 100PF 5% 50V
C834	1-135-145-11	s	TANTALUM, CHIP 0.47uF 10% 35V
C835	1-126-394-11	s	ELECT, CHIP 10uF 20% 16V
C836	1-104-851-11	s	TANTALUM, CHIP 10uF 20% 10V
C837	1-104-851-11	s	TANTALUM, CHIP 10uF 20% 10V
C839	1-163-239-11	s	CERAMIC, CHIP 33PF 5% 50V
C840	1-163-239-11	s	CERAMIC, CHIP 33PF 5% 50V
C841	1-163-038-00	s	CERAMIC, CHIP 0.1uF 25V
C842	1-126-394-11	s	ELECT, CHIP 10uF 20% 16V
C843	1-135-145-11	s	TANTALUM, CHIP 0.47uF 10% 35V
C844	1-163-251-11	s	CERAMIC, CHIP 100PF 5% 50V
C845	1-126-394-11	s	ELECT, CHIP 10uF 20% 16V
C846	1-126-393-11	s	ELECT, CHIP 33uF 20% 10V
C847	1-163-038-00	s	CERAMIC, CHIP 0.1uF 25V
C848	1-163-038-00	s	CERAMIC, CHIP 0.1uF 25V
C849	1-126-390-11	s	ELECT, CHIP 22uF 20% 6.3V
C850	1-126-394-11	s	ELECT, CHIP 10uF 20% 16V [for CE]
C851	1-163-038-00	s	CERAMIC, CHIP 0.1uF 25V
C852	1-126-390-11	s	ELECT, CHIP 22uF 20% 6.3V
C853	1-163-021-91	s	CERAMIC 0.01uF 10% 50V
C854	1-163-021-91	s	CERAMIC 0.01uF 10% 50V
C855	1-163-089-00	s	CERAMIC, CHIP 6PF 0.5PF 50V [for J,UC]
C855	1-163-227-11	s	CERAMIC, CHIP 10PF 0.5PF 50V [for CE]
C856	1-163-021-91	s	CERAMIC 0.01uF 10% 50V
C857	1-163-235-11	s	CERAMIC, CHIP 22PF 5% 50V [for J,UC]
C857	1-163-233-11	s	CERAMIC 18PF 5% 50V [for CE]
C858	1-163-038-00	s	CERAMIC, CHIP 0.1uF 25V
C859	1-163-038-00	s	CERAMIC, CHIP 0.1uF 25V
C860	1-126-393-11	s	ELECT, CHIP 33uF 20% 10V
C861	1-163-087-00	s	CERAMIC, CHIP 4PF 0.25PF 50V
C862	1-104-913-11	s	TANTALUM, CHIP 10uF 20% 16V
C863	1-126-391-11	s	ELECT 47uF 20% 6.3V
C864	1-126-391-11	s	ELECT 47uF 20% 6.3V
C865	1-163-038-00	s	CERAMIC, CHIP 0.1uF 25V
C866	1-163-038-00	s	CERAMIC, CHIP 0.1uF 25V
C867	1-163-021-91	s	CERAMIC 0.01uF 10% 50V
C868	1-163-021-91	s	CERAMIC 0.01uF 10% 50V
C869	1-163-021-91	s	CERAMIC 0.01uF 10% 50V
C870	1-163-021-91	s	CERAMIC 0.01uF 10% 50V
C871	1-163-021-91	s	CERAMIC 0.01uF 10% 50V
C872	1-163-021-91	s	CERAMIC 0.01uF 10% 50V
C873	1-126-391-11	s	ELECT 47uF 20% 6.3V
C874	1-126-391-11	s	ELECT 47uF 20% 6.3V
C875	1-163-038-00	s	CERAMIC, CHIP 0.1uF 25V
C876	1-163-038-00	s	CERAMIC, CHIP 0.1uF 25V
C877	1-163-021-91	s	CERAMIC 0.01uF 10% 50V
C878	1-163-021-91	s	CERAMIC 0.01uF 10% 50V
C879	1-163-021-91	s	CERAMIC 0.01uF 10% 50V
C880	1-163-021-91	s	CERAMIC 0.01uF 10% 50V
C881	1-163-021-91	s	CERAMIC 0.01uF 10% 50V
C882	1-163-021-91	s	CERAMIC 0.01uF 10% 50V
C883	1-126-391-11	s	ELECT 47uF 20% 6.3V

(ES-20/20P BOARD[board suffix -12])

Ref. No. or Q'ty	Part No.	SP	Description
C884	1-126-391-11	s	ELECT 47uF 20% 6.3V
C885	1-163-038-00	s	CERAMIC, CHIP 0.1uF 25V
C886	1-163-038-00	s	CERAMIC, CHIP 0.1uF 25V
C888	1-163-021-91	s	CERAMIC 0.01uF 10% 50V
C889	1-163-021-91	s	CERAMIC 0.01uF 10% 50V
C892	1-163-021-91	s	CERAMIC 0.01uF 10% 50V
C893	1-163-021-91	s	CERAMIC 0.01uF 10% 50V
C894	1-163-021-91	s	CERAMIC 0.01uF 10% 50V
C895	1-163-021-91	s	CERAMIC 0.01uF 10% 50V
C896	1-163-021-91	s	CERAMIC 0.01uF 10% 50V
C897	1-163-021-91	s	CERAMIC 0.01uF 10% 50V
C898	1-113-577-11	s	ELECT 47uF 20% 16V
C899	1-113-577-11	s	ELECT 47uF 20% 16V
C900	1-113-500-11	s	TANTALUM, CHIP 100uF 20% 10V
C901	1-113-500-11	s	TANTALUM, CHIP 100uF 20% 10V
C902	1-163-222-11	s	CERAMIC, CHIP 5PF 0.5PF 50V [for J,UC]
C902	1-163-089-00	s	CERAMIC, CHIP 6PF 0.5PF 50V [for CE]
C903	1-163-091-00	s	CERAMIC, CHIP 8PF 0.25PF 50V [for J,UC]
C903	1-163-224-11	s	CERAMIC, CHIP 7PF 0.5PF 50V [for CE]
C908	1-163-222-11	s	CERAMIC, CHIP 5PF 0.5PF 50V
C909	1-163-091-00	s	CERAMIC, CHIP 8PF 0.25PF 50V [for J,UC]
C909	1-163-089-00	s	CERAMIC, CHIP 6PF 0.5PF 50V [for CE]
C910	1-113-642-11	s	TANTALUM, CHIP 47uF 20% 10V
C911	1-113-577-11	s	ELECT 47uF 20% 16V
C912	1-113-642-11	s	TANTALUM, CHIP 47uF 20% 10V
C913	1-113-642-11	s	TANTALUM, CHIP 47uF 20% 10V
C914	1-113-577-11	s	ELECT 47uF 20% 16V
C915	1-113-642-11	s	TANTALUM, CHIP 47uF 20% 10V
C916	1-113-642-11	s	TANTALUM, CHIP 47uF 20% 10V
C917	1-113-577-11	s	ELECT 47uF 20% 16V
C918	1-113-500-11	s	TANTALUM, CHIP 100uF 20% 10V
C919	1-104-852-11	s	TANTALUM, CHIP 22uF 20% 10V
C1000	1-126-391-11	s	ELECT 47uF 20% 6.3V
C1001	1-163-038-00	s	CERAMIC, CHIP 0.1uF 25V
C1002	1-163-038-00	s	CERAMIC, CHIP 0.1uF 25V
C1003	1-126-391-11	s	ELECT 47uF 20% 6.3V
C1008	1-163-038-00	s	CERAMIC, CHIP 0.1uF 25V
C1009	1-126-391-11	s	ELECT 47uF 20% 6.3V
C1010	1-126-391-11	s	ELECT 47uF 20% 6.3V
C1011	1-163-038-00	s	CERAMIC, CHIP 0.1uF 25V
C1013	1-126-391-11	s	ELECT 47uF 20% 6.3V
C1014	1-126-391-11	s	ELECT 47uF 20% 6.3V
C1015	1-163-038-00	s	CERAMIC, CHIP 0.1uF 25V
C1016	1-163-038-00	s	CERAMIC, CHIP 0.1uF 25V
C1017	1-163-239-11	s	CERAMIC, CHIP 33PF 5% 50V [for J,UC]
C1018	1-163-125-00	s	CERAMIC, CHIP 220PF 5% 50V [for J,UC]
C1019	1-163-089-00	s	CERAMIC, CHIP 6PF 0.5PF 50V [for J,UC]
C1019	1-163-231-11	s	CERAMIC, CHIP 15PF 5% 50V [for CE]
C1020	1-163-239-11	s	CERAMIC, CHIP 33PF 5% 50V [for J,UC]
C1020	1-163-113-00	s	CERAMIC, CHIP 68PF 5% 50V [for CE]

(ES-20/20P BOARD[board suffix -12])

Ref. No. or Q'ty	Part No.	SP	Description
C1021	1-163-021-91	s	CERAMIC 0.01uF 10% 50V
C1022	1-163-021-91	s	CERAMIC 0.01uF 10% 50V
C1023	1-126-391-11	s	ELECT 47uF 20% 6.3V
C1024	1-163-038-00	s	CERAMIC, CHIP 0.1uF 25V
C1025	1-163-038-00	s	CERAMIC, CHIP 0.1uF 25V
C1026	1-126-396-11	s	ELECT, CHIP 47uF 20% 16V
C1027	1-126-396-11	s	ELECT, CHIP 47uF 20% 16V
C1028	1-163-038-00	s	CERAMIC, CHIP 0.1uF 25V
C1029	1-163-038-00	s	CERAMIC, CHIP 0.1uF 25V
C1031	1-163-038-00	s	CERAMIC, CHIP 0.1uF 25V
C1032	1-126-391-11	s	ELECT 47uF 20% 6.3V
C1033	1-126-391-11	s	ELECT 47uF 20% 6.3V
C1034	1-163-038-00	s	CERAMIC, CHIP 0.1uF 25V
C1035	1-163-038-00	s	CERAMIC, CHIP 0.1uF 25V
C1036	1-128-397-21	s	ELECT 100uF 20% 16V
C1037	1-128-397-21	s	ELECT 100uF 20% 16V
C1038	1-128-394-11	s	ELECT 220uF 20% 10V
C1039	1-163-021-91	s	CERAMIC 0.01uF 10% 50V
C1040	1-135-149-21	s	TANTALUM, CHIP 2.2uF 10% 10V
C1041	1-128-394-11	s	ELECT 220uF 20% 10V
C1042	1-163-021-91	s	CERAMIC 0.01uF 10% 50V
C1043	1-135-149-21	s	TANTALUM, CHIP 2.2uF 10% 10V
C1044	1-163-009-11	s	CERAMIC, CHIP 0.001uF 10% 50V
C1045	1-126-395-11	s	ELECT 22uF 20% 16V
C1046	1-128-397-21	s	ELECT 100uF 20% 16V
C1047	1-128-394-11	s	ELECT 220uF 20% 10V
C1048	1-163-021-91	s	CERAMIC 0.01uF 10% 50V
C1049	1-163-009-11	s	CERAMIC, CHIP 0.001uF 10% 50V
C1050	1-128-394-11	s	ELECT 220uF 20% 10V
C1054	1-126-391-11	s	ELECT 47uF 20% 6.3V
C1055	1-163-038-00	s	CERAMIC, CHIP 0.1uF 25V
C1057	1-126-391-11	s	ELECT 47uF 20% 6.3V
C1058	1-163-038-00	s	CERAMIC, CHIP 0.1uF 25V
C1059	1-126-391-11	s	ELECT 47uF 20% 6.3V
C1060	1-163-038-00	s	CERAMIC, CHIP 0.1uF 25V
C1061	1-113-577-11	s	ELECT 47uF 20% 16V
C1062	1-113-642-11	s	TANTALUM, CHIP 47uF 20% 10V
C1063	1-113-642-11	s	TANTALUM, CHIP 47uF 20% 10V
C1064	1-113-642-11	s	TANTALUM, CHIP 47uF 20% 10V
C1065	1-163-038-00	s	CERAMIC, CHIP 0.1uF 25V
C1066	1-163-227-11	s	CERAMIC, CHIP 10PF 0.5PF 50V
C1067	1-163-227-11	s	CERAMIC, CHIP 10PF 0.5PF 50V
C1068	1-163-227-11	s	CERAMIC, CHIP 10PF 0.5PF 50V
C1069	1-163-220-11	s	CERAMIC, CHIP 3PF 50V
C1070	1-163-220-11	s	CERAMIC, CHIP 3PF 50V
CN2	1-764-080-21	s	PIN, CONNECTOR (PC BOARD) 8P
CP1	1-760-267-11	s	VCO, CRYSTAL 14.3818MHz [for J,UC]
CP1	1-760-269-11	s	OSCILLATOR, CRYSTAL (VCO TYPE) [for CE]
CP2	1-760-267-11	s	VCO, CRYSTAL 14.3818MHz [for J,UC]
CP2	1-760-266-11	s	VCO, CRYSTAL 14.18750MHz [for CE]
D1	8-719-801-78	s	DIODE 1SS184
D2	8-719-801-78	s	DIODE 1SS184
D3	8-719-800-76	s	DIODE 1SS226
D4	8-719-104-34	s	DIODE 1S2835
D6	8-719-801-78	s	DIODE 1SS184
D10	8-719-801-78	s	DIODE 1SS184
D11	8-719-801-78	s	DIODE 1SS184

(ES-20/20P BOARD[board suffix -12])

Ref. No. or Q'ty	Part No.	SP	Description
D12	8-719-800-76	s	DIODE 1SS226
D500	8-719-104-34	s	DIODE 1S2835
D501	8-719-104-34	s	DIODE 1S2835
D1000	8-719-105-57	s	DIODE RD3.9M-B1
D1001	8-719-105-57	s	DIODE RD3.9M-B1
D1002	8-719-105-57	s	DIODE RD3.9M-B1
D1003	8-719-105-32	s	DIODE RD2.7MB2
D1004	8-719-800-76	s	DIODE 1SS226
D1005	8-719-800-13	s	DIODE TLUR163
D1006	8-719-800-13	s	DIODE TLUR163
D1007	8-719-157-23	s	DIODE RD4.7M-B
D1009	8-719-021-31	s	DIODE UZM5.1B
D1010	8-719-800-13	s	DIODE TLUR163
D1011	8-719-800-13	s	DIODE TLUR163
D1012	8-719-157-23	s	DIODE RD4.7M-B
DL800	1-411-271-21	s	DELAY LINE
DL801	1-234-157-21	s	DELAY LINE
FL800	1-402-647-11	s	DELAY LINE (90 DEGREES) (NTSC) [for J,UC]
FL800	1-402-646-21	s	DELAY LINE (90-degree) (PAL) [for CE]
FL801	1-239-379-21	s	BPF [for J,UC]
FL801	1-239-380-11	s	BPF [for CE]
IC1	8-759-101-12	s	IC UPC311G2
IC2	8-759-925-74	s	IC SN74HC04ANS
IC3	8-759-239-58	s	IC TC74HC221AF
IC4	8-759-927-46	s	IC SN74HC00ANS
IC5	8-759-009-07	s	IC MC14053BF
IC8	8-759-239-58	s	IC TC74HC221AF
IC9	8-759-009-46	s	IC MC14528BF
IC11	8-759-239-58	s	IC TC74HC221AF
IC12	8-752-335-47	s	IC CXD1216M
IC13	8-759-510-71	s	IC UPC358G2-E2
IC15	8-759-925-74	s	IC SN74HC04ANS
IC17	8-759-031-84	s	IC TC7S04F
IC18	8-752-335-47	s	IC CXD1216M
IC19	8-759-234-77	s	IC TC4S66F
IC20	8-759-242-64	s	IC TC4W53F
IC21	8-759-926-19	s	IC SN74HC158ANS
IC22	8-752-341-58	s	IC CXD1217Q
IC26	8-759-510-71	s	IC UPC358G2-E2
IC27	8-759-902-88	s	IC SN74LS123NS
IC28	8-759-242-64	s	IC TC4W53F
IC29	8-759-523-04	s	IC TC74HC4538AFT(EL)
IC30	8-759-112-66	s	IC UPC812G2
IC31	8-759-927-46	s	IC SN74HC00ANS
IC32	8-759-288-20	s	IC CXD8924Q
IC33	8-759-031-84	s	IC TC7S04F
IC34	8-759-927-46	s	IC SN74HC00ANS
IC35	8-759-035-87	s	IC SC7S00F
IC36	8-759-031-84	s	IC TC7S04F
IC37	8-759-239-58	s	IC TC74HC221AF
IC38	8-759-031-84	s	IC TC7S04F
IC39	8-759-195-02	s	IC TC7S86F-TE85L
IC500	8-759-271-04	s	IC LT1252CS8
IC501	8-759-242-64	s	IC TC4W53F
IC502	8-759-242-64	s	IC TC4W53F
IC503	8-759-031-84	s	IC TC7S04F

(ES-20/20P BOARD[board suffix -12])

Ref. No. or Q'ty	Part No.	SP	Description
IC504	8-759-242-64	s	IC TC4W53F
IC505	8-759-242-64	s	IC TC4W53F
IC507	8-759-700-95	s	IC NJM1496M
IC509	8-759-242-64	s	IC TC4W53F
IC510	8-759-242-64	s	IC TC4W53F
IC512	8-759-700-95	s	IC NJM1496M
IC519	8-759-906-53	s	IC TL062CPS
IC520	8-759-906-53	s	IC TL062CPS
IC521	8-759-906-53	s	IC TL062CPS
IC522	8-759-186-29	s	IC TC74VHC11F(EL) [for CE]
IC803	8-759-906-59	s	IC CX22017
IC804	8-759-242-64	s	IC TC4W53F
IC805	8-759-242-64	s	IC TC4W53F
IC806	8-759-242-64	s	IC TC4W53F
IC807	8-759-242-64	s	IC TC4W53F
IC808	8-759-242-64	s	IC TC4W53F
IC809	8-759-271-04	s	IC LT1252CS8
IC810	8-759-242-64	s	IC TC4W53F
IC811	8-759-242-64	s	IC TC4W53F
IC812	8-759-271-04	s	IC LT1252CS8
IC813	8-759-242-64	s	IC TC4W53F
IC814	8-759-242-64	s	IC TC4W53F
IC815	8-759-271-04	s	IC LT1252CS8
IC816	8-759-242-64	s	IC TC4W53F
IC817	8-759-242-64	s	IC TC4W53F
IC818	8-759-242-64	s	IC TC4W53F
IC819	8-759-271-04	s	IC LT1252CS8
IC820	8-759-242-64	s	IC TC4W53F
IC821	8-759-242-64	s	IC TC4W53F
IC822	8-759-271-04	s	IC LT1252CS8
IC823	8-759-242-64	s	IC TC4W53F
IC824	8-759-242-64	s	IC TC4W53F
IC825	8-759-271-04	s	IC LT1252CS8
IC826	8-759-258-43	s	IC LT1253CS8-E2
IC827	8-759-271-04	s	IC LT1252CS8
IC828	8-759-271-04	s	IC LT1252CS8
IC829	8-759-258-43	s	IC LT1253CS8-E2
IC1000	8-759-242-64	s	IC TC4W53F
IC1001	8-759-242-64	s	IC TC4W53F
IC1002	8-759-258-43	s	IC LT1253CS8-E2
IC1003	8-759-233-44	s	IC TC74HC595AF
IC1004	8-759-160-19	s	IC CXD8826Q
IC1005	8-759-745-64	s	IC NJM4560M
IC1006	8-759-906-53	s	IC TL062CPS
IC1007	8-759-906-53	s	IC TL062CPS
IC1009	8-759-236-19	s	IC TC74HC151AF(EL)
IC1010	8-759-242-64	s	IC TC4W53F
IC1011	8-759-242-64	s	IC TC4W53F
IC1012	8-759-242-64	s	IC TC4W53F
IC1013	8-759-032-23	s	IC MC74HC74AF
IC1014	8-759-274-67	s	IC LM4040BIM3X-5.0
IC1015	8-759-925-80	s	IC SN74HC14ANS
L1	1-410-385-11	s	INDUCTOR, CHIP 22uH
L2	1-410-385-11	s	INDUCTOR, CHIP 22uH
L3	1-410-387-11	s	INDUCTOR, CHIP 33uH
L4	1-410-385-11	s	INDUCTOR, CHIP 22uH
L5	1-410-385-11	s	INDUCTOR, CHIP 22uH
L6	1-410-656-11	s	INDUCTOR, CHIP 150uH

(ES-20/20P BOARD[board suffix -12])

Ref. No. or Q'ty	Part No.	SP	Description
L7	1-412-279-31	s	INDUCTOR 270uH [for J,UC]
L7	1-412-282-41	s	INDUCTOR, CHIP 470UH [for CE]
L8	1-412-031-11	s	INDUCTOR, CHIP 47uH
L9	1-410-656-11	s	INDUCTOR, CHIP 150uH [for J,UC]
L9	1-410-393-11	s	INDUCTOR, CHIP 100uH [for CE]
L10	1-412-031-11	s	INDUCTOR, CHIP 47uH
L11	1-412-031-11	s	INDUCTOR, CHIP 47uH
L12	1-412-031-11	s	INDUCTOR, CHIP 47uH
L13	1-412-031-11	s	INDUCTOR, CHIP 47uH
L14	1-410-385-11	s	INDUCTOR, CHIP 22uH
L15	1-410-385-11	s	INDUCTOR, CHIP 22uH
L501	1-410-385-11	s	INDUCTOR, CHIP 22uH
L502	1-410-385-11	s	INDUCTOR, CHIP 22uH
L503	1-410-385-11	s	INDUCTOR, CHIP 22uH
L504	1-410-385-11	s	INDUCTOR, CHIP 22uH
L506	1-410-385-11	s	INDUCTOR, CHIP 22uH
L507	1-410-385-11	s	INDUCTOR, CHIP 22uH
L508	1-412-279-31	s	INDUCTOR 270uH
L510	1-410-385-11	s	INDUCTOR, CHIP 22uH
L511	1-410-385-11	s	INDUCTOR, CHIP 22uH
L514	1-410-385-11	s	INDUCTOR, CHIP 22uH
L515	1-410-385-11	s	INDUCTOR, CHIP 22uH
L800	1-410-385-11	s	INDUCTOR, CHIP 22uH
L801	1-412-031-11	s	INDUCTOR, CHIP 47uH
L802	1-410-392-11	s	INDUCTOR, CHIP 82uH [for J,UC]
L802	1-410-656-11	s	INDUCTOR, CHIP 150uH [for CE]
L803	1-410-392-11	s	INDUCTOR, CHIP 82uH [for J,UC]
L803	1-410-656-11	s	INDUCTOR, CHIP 150uH [for CE]
L804	1-412-031-11	s	INDUCTOR, CHIP 47uH
L805	1-412-031-11	s	INDUCTOR, CHIP 47uH
L806	1-412-031-11	s	INDUCTOR, CHIP 47uH
L807	1-412-280-31	s	INDUCTOR 330uH
L808	1-412-280-31	s	INDUCTOR 330uH
L809	1-412-031-11	s	INDUCTOR, CHIP 47uH
L810	1-412-031-11	s	INDUCTOR, CHIP 47uH
L811	1-412-031-11	s	INDUCTOR, CHIP 47uH
L812	1-412-031-11	s	INDUCTOR, CHIP 47uH
L813	1-410-385-11	s	INDUCTOR, CHIP 22uH
L814	1-410-385-11	s	INDUCTOR, CHIP 22uH
L815	1-410-385-11	s	INDUCTOR, CHIP 22uH
L816	1-410-385-11	s	INDUCTOR, CHIP 22uH
L817	1-410-385-11	s	INDUCTOR, CHIP 22uH
L818	1-410-385-11	s	INDUCTOR, CHIP 22uH
L1000	1-410-385-11	s	INDUCTOR, CHIP 22uH
L1001	1-410-385-11	s	INDUCTOR, CHIP 22uH
L1002	1-410-385-11	s	INDUCTOR, CHIP 22uH
L1003	1-410-385-11	s	INDUCTOR, CHIP 22uH
L1004	1-410-385-11	s	INDUCTOR, CHIP 22uH
L1005	1-410-385-11	s	INDUCTOR, CHIP 22uH
L1006	1-412-282-41	s	INDUCTOR, CHIP 470UH [for J,UC]
L1007	1-410-392-11	s	INDUCTOR, CHIP 82uH [for J,UC]
L1007	1-410-656-11	s	INDUCTOR, CHIP 150uH [for CE]
L1008	1-410-385-11	s	INDUCTOR, CHIP 22uH
L1009	1-410-385-11	s	INDUCTOR, CHIP 22uH
L1010	1-410-948-11	s	INDUCTOR 100uH
L1011	1-410-948-11	s	INDUCTOR 100uH
L1012	1-410-948-11	s	INDUCTOR 100uH
L1014	1-410-385-11	s	INDUCTOR, CHIP 22uH
L1015	1-410-385-11	s	INDUCTOR, CHIP 22uH

(ES-20/20P BOARD[board suffix -12])

Ref. No. or Q'ty	Part No.	SP	Description
Q1	8-729-122-63	s	TRANSISTOR 2SA1226
Q2	8-729-120-28	s	TRANSISTOR 2SC1623-L5L6
Q3	8-729-120-28	s	TRANSISTOR 2SC1623-L5L6
Q4	8-729-120-28	s	TRANSISTOR 2SC1623-L5L6
Q5	8-729-122-63	s	TRANSISTOR 2SA1226
Q6	8-729-120-28	s	TRANSISTOR 2SC1623-L5L6
Q7	8-729-120-28	s	TRANSISTOR 2SC1623-L5L6
Q8	8-729-122-63	s	TRANSISTOR 2SA1226
Q9	8-729-122-63	s	TRANSISTOR 2SA1226
Q10	8-729-120-28	s	TRANSISTOR 2SC1623-L5L6
Q11	8-729-122-63	s	TRANSISTOR 2SA1226
Q12	8-729-109-44	s	TRANSISTOR 2SK94
Q13	8-729-216-22	s	TRANSISTOR 2SA1162
Q14	8-729-120-28	s	TRANSISTOR 2SC1623-L5L6
Q15	8-729-216-22	s	TRANSISTOR 2SA1162
Q16	8-729-120-28	s	TRANSISTOR 2SC1623-L5L6
Q17	8-729-120-28	s	TRANSISTOR 2SC1623-L5L6
Q18	8-729-120-28	s	TRANSISTOR 2SC1623-L5L6
Q19	8-729-122-63	s	TRANSISTOR 2SA1226
Q20	8-729-122-63	s	TRANSISTOR 2SA1226
Q21	8-729-122-63	s	TRANSISTOR 2SA1226
Q22	8-729-109-44	s	TRANSISTOR 2SK94
Q23	8-729-120-28	s	TRANSISTOR 2SC1623-L5L6
Q500	8-729-216-22	s	TRANSISTOR 2SA1162
Q501	8-729-122-63	s	TRANSISTOR 2SA1226
Q502	8-729-101-25	s	TRANSISTOR 2SC1009A
Q503	8-729-216-22	s	TRANSISTOR 2SA1162
Q504	8-729-216-22	s	TRANSISTOR 2SA1162
Q505	8-729-031-37	s	TRANSISTOR 2SC3837KT146Q
Q506	8-729-216-22	s	TRANSISTOR 2SA1162
Q507	8-729-216-22	s	TRANSISTOR 2SA1162
Q508	8-729-031-37	s	TRANSISTOR 2SC3837KT146Q
Q509	8-729-216-22	s	TRANSISTOR 2SA1162
Q510	8-729-122-63	s	TRANSISTOR 2SA1226
Q511	8-729-101-25	s	TRANSISTOR 2SC1009A
Q512	8-729-216-22	s	TRANSISTOR 2SA1162
Q513	8-729-120-28	s	TRANSISTOR 2SC1623-L5L6
Q514	8-729-122-63	s	TRANSISTOR 2SA1226
Q515	8-729-101-25	s	TRANSISTOR 2SC1009A
Q519	8-729-216-22	s	TRANSISTOR 2SA1162
Q520	8-729-120-28	s	TRANSISTOR 2SC1623-L5L6
Q521	8-729-216-22	s	TRANSISTOR 2SA1162
Q522	8-729-216-22	s	TRANSISTOR 2SA1162
Q523	8-729-216-22	s	TRANSISTOR 2SA1162
Q524	8-729-101-25	s	TRANSISTOR 2SC1009A
Q525	8-729-402-19	s	TRANSISTOR XN6501
Q526	8-729-216-22	s	TRANSISTOR 2SA1162
Q527	8-729-101-25	s	TRANSISTOR 2SC1009A
Q528	8-729-120-28	s	TRANSISTOR 2SC1623-L5L6
Q529	8-729-101-25	s	TRANSISTOR 2SC1009A
Q530	8-729-216-22	s	TRANSISTOR 2SA1162
Q531	8-729-216-22	s	TRANSISTOR 2SA1162
Q532	8-729-421-71	s	TRANSISTOR 2SK620
Q533	8-729-101-25	s	TRANSISTOR 2SC1009A
Q534	8-729-101-25	s	TRANSISTOR 2SC1009A
Q535	8-729-216-22	s	TRANSISTOR 2SA1162
Q536	8-729-216-22	s	TRANSISTOR 2SA1162
Q537	8-729-421-71	s	TRANSISTOR 2SK620
Q538	8-729-101-25	s	TRANSISTOR 2SC1009A

(ES-20/20P BOARD[board suffix -12])

Ref. No. or Q'ty	Part No.	SP	Description
Q539	8-729-101-25	s	TRANSISTOR 2SC1009A
Q540	8-729-216-22	s	TRANSISTOR 2SA1162
Q541	8-729-216-22	s	TRANSISTOR 2SA1162
Q542	8-729-421-71	s	TRANSISTOR 2SK620
Q543	8-729-120-28	s	TRANSISTOR 2SC1623-L5L6
Q544	8-729-120-28	s	TRANSISTOR 2SC1623-L5L6
Q545	8-729-101-25	s	TRANSISTOR 2SC1009A
Q546	8-729-101-25	s	TRANSISTOR 2SC1009A
Q547	8-729-402-19	s	TRANSISTOR XN6501
Q548	8-729-216-22	s	TRANSISTOR 2SA1162
Q549	8-729-216-22	s	TRANSISTOR 2SA1162
Q550	8-729-216-22	s	TRANSISTOR 2SA1162
Q551	8-729-216-22	s	TRANSISTOR 2SA1162
Q552	8-729-120-28	s	TRANSISTOR 2SC1623-L5L6
Q553	8-729-216-22	s	TRANSISTOR 2SA1162
Q554	8-729-120-28	s	TRANSISTOR 2SC1623-L5L6
Q555	8-729-216-22	s	TRANSISTOR 2SA1162
Q556	8-729-120-28	s	TRANSISTOR 2SC1623-L5L6
Q557	8-729-120-28	s	TRANSISTOR 2SC1623-L5L6
Q560	8-729-120-28	s	TRANSISTOR 2SC1623-L5L6
Q561	8-729-120-28	s	TRANSISTOR 2SC1623-L5L6
Q562	8-729-120-28	s	TRANSISTOR 2SC1623-L5L6
Q563	8-729-216-22	s	TRANSISTOR 2SA1162
Q564	8-729-216-22	s	TRANSISTOR 2SA1162
Q565	8-729-216-22	s	TRANSISTOR 2SA1162
Q566	8-729-120-28	s	TRANSISTOR 2SC1623-L5L6
Q567	8-729-120-28	s	TRANSISTOR 2SC1623-L5L6
Q568	8-729-120-28	s	TRANSISTOR 2SC1623-L5L6
Q569	8-729-216-22	s	TRANSISTOR 2SA1162
Q570	8-729-216-22	s	TRANSISTOR 2SA1162
Q571	8-729-216-22	s	TRANSISTOR 2SA1162
Q572	8-729-120-28	s	TRANSISTOR 2SC1623-L5L6
Q573	8-729-216-22	s	TRANSISTOR 2SA1162
Q574	8-729-216-22	s	TRANSISTOR 2SA1162
Q576	8-729-120-28	s	TRANSISTOR 2SC1623-L5L6
Q577	8-729-216-22	s	TRANSISTOR 2SA1162
Q578	8-729-216-22	s	TRANSISTOR 2SA1162
Q800	8-729-120-28	s	TRANSISTOR 2SC1623-L5L6 [for J,UC]
Q801	8-729-120-28	s	TRANSISTOR 2SC1623-L5L6
Q802	8-729-200-87	s	TRANSISTOR 2SC2714Y
Q803	8-729-120-28	s	TRANSISTOR 2SC1623-L5L6
Q804	8-729-120-28	s	TRANSISTOR 2SC1623-L5L6
Q805	8-729-120-28	s	TRANSISTOR 2SC1623-L5L6
Q806	8-729-120-28	s	TRANSISTOR 2SC1623-L5L6
Q807	8-729-216-22	s	TRANSISTOR 2SA1162
Q808	8-729-120-28	s	TRANSISTOR 2SC1623-L5L6
Q809	8-729-216-22	s	TRANSISTOR 2SA1162
Q810	8-729-216-22	s	TRANSISTOR 2SA1162
Q811	8-729-216-22	s	TRANSISTOR 2SA1162
Q812	8-729-120-28	s	TRANSISTOR 2SC1623-L5L6
Q813	8-729-120-28	s	TRANSISTOR 2SC1623-L5L6
Q814	8-729-120-28	s	TRANSISTOR 2SC1623-L5L6
Q815	8-729-216-22	s	TRANSISTOR 2SA1162
Q816	8-729-120-28	s	TRANSISTOR 2SC1623-L5L6
Q817	8-729-216-22	s	TRANSISTOR 2SA1162
Q818	8-729-120-28	s	TRANSISTOR 2SC1623-L5L6
Q819	8-729-120-28	s	TRANSISTOR 2SC1623-L5L6
Q820	8-729-120-28	s	TRANSISTOR 2SC1623-L5L6
Q821	8-729-101-25	s	TRANSISTOR 2SC1009A

(ES-20/20P BOARD[board suffix -12])

Ref. No. or Q'ty	Part No.	SP	Description
Q822	8-729-120-28	s	TRANSISTOR 2SC1623-L5L6
Q823	8-729-101-25	s	TRANSISTOR 2SC1009A
Q824	8-729-101-25	s	TRANSISTOR 2SC1009A
Q825	8-729-120-28	s	TRANSISTOR 2SC1623-L5L6
Q826	8-729-120-28	s	TRANSISTOR 2SC1623-L5L6
Q827	8-729-120-28	s	TRANSISTOR 2SC1623-L5L6
Q828	8-729-122-63	s	TRANSISTOR 2SA1226
Q829	8-729-101-25	s	TRANSISTOR 2SC1009A
Q830	8-729-216-22	s	TRANSISTOR 2SA1162
Q831	8-729-216-22	s	TRANSISTOR 2SA1162
Q832	8-729-120-28	s	TRANSISTOR 2SC1623-L5L6
Q833	8-729-120-28	s	TRANSISTOR 2SC1623-L5L6
Q834	8-729-122-63	s	TRANSISTOR 2SA1226
Q835	8-729-120-28	s	TRANSISTOR 2SC1623-L5L6
Q836	8-729-216-22	s	TRANSISTOR 2SA1162
Q837	8-729-120-28	s	TRANSISTOR 2SC1623-L5L6
Q838	8-729-120-28	s	TRANSISTOR 2SC1623-L5L6
Q839	8-729-101-25	s	TRANSISTOR 2SC1009A
Q840	8-729-122-63	s	TRANSISTOR 2SA1226
Q841	8-729-122-63	s	TRANSISTOR 2SA1226
Q842	8-729-120-28	s	TRANSISTOR 2SC1623-L5L6
Q843	8-729-216-22	s	TRANSISTOR 2SA1162
Q844	8-729-120-28	s	TRANSISTOR 2SC1623-L5L6
Q845	8-729-120-28	s	TRANSISTOR 2SC1623-L5L6
Q846	8-729-216-22	s	TRANSISTOR 2SA1162
Q847	8-729-216-22	s	TRANSISTOR 2SA1162
Q848	8-729-216-22	s	TRANSISTOR 2SA1162
Q849	8-729-216-22	s	TRANSISTOR 2SA1162
Q850	8-729-216-22	s	TRANSISTOR 2SA1162
Q851	8-729-216-22	s	TRANSISTOR 2SA1162
Q852	8-729-101-25	s	TRANSISTOR 2SC1009A
Q853	8-729-120-28	s	TRANSISTOR 2SC1623-L5L6
Q854	8-729-120-28	s	TRANSISTOR 2SC1623-L5L6
Q855	8-729-216-22	s	TRANSISTOR 2SA1162
Q856	8-729-120-28	s	TRANSISTOR 2SC1623-L5L6
Q857	8-729-216-22	s	TRANSISTOR 2SA1162
Q1000	8-729-216-22	s	TRANSISTOR 2SA1162
Q1001	8-729-216-22	s	TRANSISTOR 2SA1162
Q1002	8-729-216-22	s	TRANSISTOR 2SA1162
Q1003	8-729-216-22	s	TRANSISTOR 2SA1162
Q1004	8-729-216-22	s	TRANSISTOR 2SA1162
Q1005	8-729-216-22	s	TRANSISTOR 2SA1162
Q1006	8-729-216-22	s	TRANSISTOR 2SA1162
Q1007	8-729-216-22	s	TRANSISTOR 2SA1162
Q1008	8-729-120-28	s	TRANSISTOR 2SC1623-L5L6
Q1009	8-729-120-28	s	TRANSISTOR 2SC1623-L5L6
Q1010	8-729-120-28	s	TRANSISTOR 2SC1623-L5L6
Q1011	8-729-120-28	s	TRANSISTOR 2SC1623-L5L6
Q1012	8-729-216-22	s	TRANSISTOR 2SA1162
Q1013	8-729-216-22	s	TRANSISTOR 2SA1162
Q1014	8-729-821-88	s	TRANSISTOR 2SK1332-3
Q1015	8-729-216-22	s	TRANSISTOR 2SA1162
Q1016	8-729-216-22	s	TRANSISTOR 2SA1162
Q1017	8-729-821-88	s	TRANSISTOR 2SK1332-3
Q1018	8-729-216-22	s	TRANSISTOR 2SA1162
Q1019	8-729-216-22	s	TRANSISTOR 2SA1162
Q1020	8-729-821-88	s	TRANSISTOR 2SK1332-3
Q1021	8-729-216-22	s	TRANSISTOR 2SA1162
Q1022	8-729-216-22	s	TRANSISTOR 2SA1162

(ES-20/20P BOARD[board suffix -12])

Ref. No. or Q'ty	Part No.	SP	Description
Q1023	8-729-821-88	s	TRANSISTOR 2SK1332-3
Q1024	8-729-101-25	s	TRANSISTOR 2SC1009A
Q1025	8-729-216-22	s	TRANSISTOR 2SA1162
Q1026	8-729-120-28	s	TRANSISTOR 2SC1623-L5L6
Q1027	8-729-120-28	s	TRANSISTOR 2SC1623-L5L6
Q1028	8-729-216-22	s	TRANSISTOR 2SA1162
Q1029	8-729-216-22	s	TRANSISTOR 2SA1162
Q1030	8-729-120-28	s	TRANSISTOR 2SC1623-L5L6
Q1031	8-729-216-22	s	TRANSISTOR 2SA1162
Q1032	8-729-120-28	s	TRANSISTOR 2SC1623-L5L6
Q1033	8-729-216-22	s	TRANSISTOR 2SA1162
Q1034	8-729-120-28	s	TRANSISTOR 2SC1623-L5L6
Q1035	8-729-216-22	s	TRANSISTOR 2SA1162
Q1036	8-729-216-22	s	TRANSISTOR 2SA1162
Q1037	8-729-101-07	s	TRANSISTOR 2SB798
Q1038	8-729-101-07	s	TRANSISTOR 2SB798
Q1039	8-729-807-51	s	TRANSISTOR 2SD1623-S
Q1041	8-729-216-22	s	TRANSISTOR 2SA1162
Q1042	8-729-120-28	s	TRANSISTOR 2SC1623-L5L6
Q1043	8-729-216-22	s	TRANSISTOR 2SA1162
Q1044	8-729-120-28	s	TRANSISTOR 2SC1623-L5L6
Q1045	8-729-216-22	s	TRANSISTOR 2SA1162
Q1046	8-729-120-28	s	TRANSISTOR 2SC1623-L5L6
R1	1-208-782-11	s	METAL, CHIP 1K 0.50% 1/10W
R2	1-216-089-91	s	METAL, CHIP 47k 5% 1/10W
R3	1-216-079-00	s	METAL, CHIP 18K 5% 1/10W
R4	1-216-025-11	s	METAL, CHIP 100 5% 1/10W
R5	1-216-089-91	s	METAL, CHIP 47k 5% 1/10W
R6	1-216-057-00	s	METAL, CHIP 2.2K 5% 1/10W
R7	1-216-061-00	s	METAL, CHIP 3.3K 5% 1/10W
R8	1-216-069-00	s	METAL, CHIP 6.8K 5% 1/10W
R9	1-216-057-00	s	METAL, CHIP 2.2K 5% 1/10W
R10	1-208-775-11	s	METAL, CHIP 510 0.50% 1/10W
R11	1-208-782-11	s	METAL, CHIP 1K 0.50% 1/10W
R12	1-208-788-11	s	METAL, CHIP 1.8K 0.50% 1/10W
R13	1-208-794-11	s	METAL, CHIP 3.3K 0.50% 1/10W
R14	1-208-783-11	s	METAL, CHIP 1.1K 0.50% 1/10W
R15	1-216-097-00	s	METAL, CHIP 100K 5% 1/10W
R16	1-216-049-91	s	METAL, CHIP 1K 5% 1/10W
R17	1-216-057-00	s	METAL, CHIP 2.2K 5% 1/10W
R18	1-216-053-00	s	METAL, CHIP 1.5K 5% 1/10W
R19	1-216-097-00	s	METAL, CHIP 100K 5% 1/10W
R20	1-216-009-91	s	METAL, CHIP 22 5% 1/10W
R21	1-216-065-00	s	METAL, CHIP 4.7K 5% 1/10W
R22	1-216-097-00	s	METAL, CHIP 100K 5% 1/10W
R23	1-216-049-91	s	METAL, CHIP 1K 5% 1/10W
R24	1-208-801-11	s	METAL, CHIP 6.2K 0.50% 1/10W
R25	1-216-103-00	s	METAL, CHIP 180K 5% 1/10W
R26	1-216-057-00	s	METAL, CHIP 2.2K 5% 1/10W
R27	1-216-069-00	s	METAL, CHIP 6.8K 5% 1/10W
R28	1-208-798-11	s	METAL, CHIP 4.7K 0.50% 1/10W
R29	1-216-121-91	s	METAL, CHIP 1M 5% 1/10W
R30	1-208-798-11	s	METAL, CHIP 4.7K 0.50% 1/10W
R31	1-216-049-91	s	METAL, CHIP 1K 5% 1/10W
R33	1-208-805-11	s	METAL, CHIP 9.1K 0.50% 1/10W
R34	1-208-805-11	s	METAL, CHIP 9.1K 0.50% 1/10W
R35	1-216-049-91	s	METAL, CHIP 1K 5% 1/10W
R36	1-216-089-91	s	METAL, CHIP 47k 5% 1/10W

(ES-20/20P BOARD[board suffix -12])

Ref. No. or Q'ty	Part No.	SP	Description
R37	1-216-049-91	s	METAL, CHIP 1K 5% 1/10W
R40	1-216-035-00	s	METAL, CHIP 270 5% 1/10W
R44	1-216-093-91	s	METAL, CHIP 68K 5% 1/10W
R48	1-208-806-11	s	METAL, CHIP 10K 0.50% 1/10W
R50	1-208-806-11	s	METAL, CHIP 10K 0.50% 1/10W
R51	1-216-033-00	s	METAL, CHIP 220 5% 1/10W
R53	1-208-790-11	s	METAL, CHIP 2.2K 0.50% 1/10W
R54	1-216-295-11	s	CONDUCTOR, CHIP 0 [for J,UC]
R55	1-216-295-11	s	CONDUCTOR, CHIP 0
R56	1-216-295-11	s	CONDUCTOR, CHIP 0 [for CE]
R57	1-208-806-11	s	METAL, CHIP 10K 0.50% 1/10W
R58	1-216-049-91	s	METAL, CHIP 1K 5% 1/10W
R59	1-216-073-00	s	METAL, CHIP 10K 5% 1/10W
R60	1-216-065-00	s	METAL, CHIP 4.7K 5% 1/10W
R61	1-208-814-91	s	METAL, CHIP 22K 0.50% 1/10W
R62	1-208-814-91	s	METAL, CHIP 22K 0.50% 1/10W
R63	1-208-814-91	s	METAL, CHIP 22K 0.50% 1/10W
R64	1-208-814-91	s	METAL, CHIP 22K 0.50% 1/10W
R65	1-216-049-91	s	METAL, CHIP 1K 5% 1/10W
R66	1-208-803-11	s	METAL, CHIP 7.5K 0.50% 1/10W [for J,UC]
R66	1-208-808-11	s	METAL, CHIP 12K 0.50% 1/10W [for CE]
R70	1-216-049-91	s	METAL, CHIP 1K 5% 1/10W
R71	1-216-063-00	s	METAL, CHIP 3.9K 5% 1/10W
R72	1-208-788-11	s	METAL, CHIP 1.8K 0.50% 1/10W
R73	1-208-784-11	s	METAL, CHIP 1.2K 0.50% 1/10W
R74	1-216-073-00	s	METAL, CHIP 10K 5% 1/10W
R75	1-216-065-00	s	METAL, CHIP 4.7K 5% 1/10W
R76	1-216-033-00	s	METAL, CHIP 220 5% 1/10W
R77	1-216-021-00	s	METAL, CHIP 68 5% 1/10W
R78	1-216-065-00	s	METAL, CHIP 4.7K 5% 1/10W
R79	1-208-810-11	s	METAL, CHIP 15K 0.50% 1/10W
R80	1-216-295-11	s	CONDUCTOR, CHIP 0
R81	1-216-295-11	s	CONDUCTOR, CHIP 0
R82	1-216-049-91	s	METAL, CHIP 1K 5% 1/10W
R84	1-208-790-11	s	METAL, CHIP 2.2K 0.50% 1/10W
R85	1-208-790-11	s	METAL, CHIP 2.2K 0.50% 1/10W
R86	1-216-069-00	s	METAL, CHIP 6.8K 5% 1/10W
R87	1-216-025-11	s	METAL, CHIP 100 5% 1/10W
R88	1-216-061-00	s	METAL, CHIP 3.3K 5% 1/10W
R89	1-216-033-00	s	METAL, CHIP 220 5% 1/10W
R96	1-208-795-11	s	METAL, CHIP 3.6K 0.50% 1/10W
R97	1-216-049-91	s	METAL, CHIP 1K 5% 1/10W
R98	1-216-049-91	s	METAL, CHIP 1K 5% 1/10W
R99	1-216-033-00	s	METAL, CHIP 220 5% 1/10W
R100	1-216-079-00	s	METAL, CHIP 18K 5% 1/10W
R101	1-216-065-00	s	METAL, CHIP 4.7K 5% 1/10W
R102	1-216-049-91	s	METAL, CHIP 1K 5% 1/10W
R103	1-216-037-00	s	METAL, CHIP 330 5% 1/10W
R104	1-216-061-00	s	METAL, CHIP 3.3K 5% 1/10W
R105	1-216-103-00	s	METAL, CHIP 180K 5% 1/10W
R106	1-216-053-00	s	METAL, CHIP 1.5K 5% 1/10W
R107	1-216-053-00	s	METAL, CHIP 1.5K 5% 1/10W [for J,UC]
R107	1-216-061-00	s	METAL, CHIP 3.3K 5% 1/10W [for CE]
R108	1-216-059-00	s	METAL, CHIP 2.7K 5% 1/10W
R109	1-216-073-00	s	METAL, CHIP 10K 5% 1/10W
R110	1-216-081-00	s	METAL, CHIP 22K 5% 1/10W

(ES-20/20P BOARD[board suffix -12])

Ref. No. or Q'ty	Part No.	SP	Description
R111	1-208-800-11	s	METAL, CHIP 5.6K 0.50% 1/10W
R112	1-216-295-11	s	CONDUCTOR, CHIP 0 [for J,UC]
R113	1-216-295-11	s	CONDUCTOR, CHIP 0
R114	1-216-295-11	s	CONDUCTOR, CHIP 0 [for CE]
R115	1-216-049-91	s	METAL, CHIP 1K 5% 1/10W
R116	1-216-067-00	s	METAL, CHIP 5.6K 5% 1/10W
R117	1-216-061-00	s	METAL, CHIP 3.3K 5% 1/10W
R118	1-216-057-00	s	METAL, CHIP 2.2K 5% 1/10W
R119	1-216-069-00	s	METAL, CHIP 6.8K 5% 1/10W
R120	1-216-085-00	s	METAL, CHIP 33K 5% 1/10W
R121	1-216-097-00	s	METAL, CHIP 100K 5% 1/10W
R122	1-208-772-11	s	METAL, CHIP 390 0.50% 1/10W
R123	1-208-772-11	s	METAL, CHIP 390 0.50% 1/10W
R124	1-216-073-00	s	METAL, CHIP 10K 5% 1/10W
R125	1-216-049-91	s	METAL, CHIP 1K 5% 1/10W
R126	1-216-067-00	s	METAL, CHIP 5.6K 5% 1/10W
R127	1-216-073-00	s	METAL, CHIP 10K 5% 1/10W
R128	1-216-065-00	s	METAL, CHIP 4.7K 5% 1/10W
R129	1-216-025-11	s	METAL, CHIP 100 5% 1/10W
R130	1-216-295-11	s	CONDUCTOR, CHIP 0 [for J,UC]
R131	1-216-049-91	s	METAL, CHIP 1K 5% 1/10W
R132	1-216-295-11	s	CONDUCTOR, CHIP 0 [for CE]
R133	1-216-049-91	s	METAL, CHIP 1K 5% 1/10W
R134	1-216-295-11	s	CONDUCTOR, CHIP 0 [for J,UC]
R135	1-216-295-11	s	CONDUCTOR, CHIP 0 [for CE]
R136	1-216-295-11	s	CONDUCTOR, CHIP 0
R137	1-216-295-11	s	CONDUCTOR, CHIP 0 [for J,UC]
R138	1-216-121-91	s	METAL, CHIP 1M 5% 1/10W
R139	1-216-121-91	s	METAL, CHIP 1M 5% 1/10W
R140	1-216-073-00	s	METAL, CHIP 10K 5% 1/10W
R141	1-208-817-11	s	METAL, CHIP 30K 0.50% 1/10W
R142	1-208-816-11	s	METAL, CHIP 27K 0.50% 1/10W
R143	1-216-073-00	s	METAL, CHIP 10K 5% 1/10W
R144	1-216-025-11	s	METAL, CHIP 100 5% 1/10W
R145	1-216-057-00	s	METAL, CHIP 2.2K 5% 1/10W
R146	1-216-049-91	s	METAL, CHIP 1K 5% 1/10W
R147	1-216-295-11	s	CONDUCTOR, CHIP 0
R148	1-216-049-91	s	METAL, CHIP 1K 5% 1/10W
R150	1-208-804-11	s	METAL, CHIP 8.2K 0.50% 1/10W
R151	1-208-818-11	s	METAL, CHIP 33K 0.50% 1/10W
R152	1-208-814-91	s	METAL, CHIP 22K 0.50% 1/10W
R153	1-208-806-11	s	METAL, CHIP 10K 0.50% 1/10W
R154	1-208-818-11	s	METAL, CHIP 33K 0.50% 1/10W
R155	1-208-805-11	s	METAL, CHIP 9.1K 0.50% 1/10W
R156	1-216-073-00	s	METAL, CHIP 10K 5% 1/10W
R157	1-216-025-11	s	METAL, CHIP 100 5% 1/10W
R158	1-216-049-91	s	METAL, CHIP 1K 5% 1/10W
R159	1-216-057-00	s	METAL, CHIP 2.2K 5% 1/10W
R161	1-216-073-00	s	METAL, CHIP 10K 5% 1/10W
R162	1-216-077-00	s	METAL, CHIP 15K 5% 1/10W
R163	1-216-025-11	s	METAL, CHIP 100 5% 1/10W
R164	1-208-788-11	s	METAL, CHIP 1.8K 0.50% 1/10W
R165	1-216-077-00	s	METAL, CHIP 15K 5% 1/10W
R166	1-208-803-11	s	METAL, CHIP 7.5K 0.50% 1/10W
R167	1-216-295-11	s	CONDUCTOR, CHIP 0 [for J,UC]
R168	1-216-295-11	s	CONDUCTOR, CHIP 0 [for CE]
R169	1-216-295-11	s	CONDUCTOR, CHIP 0 [for CE]
R170	1-216-295-11	s	CONDUCTOR, CHIP 0 [for J,UC]
R171	1-216-295-11	s	CONDUCTOR, CHIP 0 [for CE]

(ES-20/20P BOARD[board suffix -12])

Ref. No. or Q'ty	Part No.	SP	Description
R172	1-216-295-11	s	CONDUCTOR, CHIP 0 [for J,UC]
R173	1-216-295-11	s	CONDUCTOR, CHIP 0 [for J,UC]
R174	1-216-295-11	s	CONDUCTOR, CHIP 0 [for CE]
R175	1-216-097-00	s	METAL, CHIP 100K 5% 1/10W
R176	1-216-097-00	s	METAL, CHIP 100K 5% 1/10W
R177	1-216-097-00	s	METAL, CHIP 100K 5% 1/10W
R178	1-216-097-00	s	METAL, CHIP 100K 5% 1/10W
R179	1-216-097-00	s	METAL, CHIP 100K 5% 1/10W
R180	1-216-097-00	s	METAL, CHIP 100K 5% 1/10W
R182	1-208-782-11	s	METAL, CHIP 1K 0.50% 1/10W
R183	1-216-033-00	s	METAL, CHIP 220 5% 1/10W
R184	1-216-097-00	s	METAL, CHIP 100K 5% 1/10W
R185	1-208-805-11	s	METAL, CHIP 9.1K 0.50% 1/10W
R186	1-208-802-11	s	METAL, CHIP 6.8K 0.50% 1/10W
R187	1-216-033-00	s	METAL, CHIP 220 5% 1/10W
R188	1-216-053-00	s	METAL, CHIP 1.5K 5% 1/10W
R189	1-216-085-00	s	METAL, CHIP 33K 5% 1/10W
R190	1-208-782-11	s	METAL, CHIP 1K 0.50% 1/10W
R500	1-216-069-00	s	METAL, CHIP 6.8K 5% 1/10W
R501	1-216-025-11	s	METAL, CHIP 100 5% 1/10W
R502	1-216-065-00	s	METAL, CHIP 4.7K 5% 1/10W
R503	1-216-025-11	s	METAL, CHIP 100 5% 1/10W
R504	1-216-065-00	s	METAL, CHIP 4.7K 5% 1/10W
R505	1-208-775-11	s	METAL, CHIP 510 0.50% 1/10W
R506	1-216-067-00	s	METAL, CHIP 5.6K 5% 1/10W
R507	1-216-041-00	s	METAL, CHIP 470 5% 1/10W
R508	1-208-806-11	s	METAL, CHIP 10K 0.50% 1/10W
R509	1-216-655-11	s	METAL, CHIP 1.5K 0.50% 1/10W [for J,UC]
R509	1-208-788-11	s	METAL, CHIP 1.8K 0.50% 1/10W [for CE]
R510	1-216-041-00	s	METAL, CHIP 470 5% 1/10W
R511	1-208-782-11	s	METAL, CHIP 1K 0.50% 1/10W
R512	1-216-025-11	s	METAL, CHIP 100 5% 1/10W
R513	1-216-055-00	s	METAL, CHIP 1.8K 5% 1/10W
R514	1-216-025-11	s	METAL, CHIP 100 5% 1/10W
R515	1-216-041-00	s	METAL, CHIP 470 5% 1/10W
R516	1-216-025-11	s	METAL, CHIP 100 5% 1/10W
R517	1-216-069-00	s	METAL, CHIP 6.8K 5% 1/10W
R518	1-208-782-11	s	METAL, CHIP 1K 0.50% 1/10W
R519	1-208-799-11	s	METAL, CHIP 5.1K 0.50% 1/10W
R520	1-208-801-11	s	METAL, CHIP 6.2K 0.50% 1/10W
R521	1-216-069-00	s	METAL, CHIP 6.8K 5% 1/10W
R522	1-216-073-00	s	METAL, CHIP 10K 5% 1/10W
R523	1-216-025-11	s	METAL, CHIP 100 5% 1/10W
R524	1-216-065-00	s	METAL, CHIP 4.7K 5% 1/10W
R525	1-216-025-11	s	METAL, CHIP 100 5% 1/10W
R526	1-216-065-00	s	METAL, CHIP 4.7K 5% 1/10W
R529	1-216-648-11	s	METAL, CHIP 750 0.50% 1/10W
R530	1-216-055-00	s	METAL, CHIP 1.8K 5% 1/10W
R531	1-208-807-11	s	METAL, CHIP 11K 0.50% 1/10W
R532	1-216-295-11	s	CONDUCTOR, CHIP 0
R533	1-216-067-00	s	METAL, CHIP 5.6K 5% 1/10W
R534	1-216-033-00	s	METAL, CHIP 220 5% 1/10W
R535	1-208-777-11	s	METAL, CHIP 620 0.50% 1/10W
R536	1-216-097-00	s	METAL, CHIP 100K 5% 1/10W
R537	1-216-049-91	s	METAL, CHIP 1K 5% 1/10W
R538	1-216-045-00	s	METAL, CHIP 680 5% 1/10W
R539	1-208-802-11	s	METAL, CHIP 6.8K 0.50% 1/10W

(ES-20/20P BOARD[board suffix -12])

Ref. No. or Q'ty	Part No.	SP	Description
R540	1-216-648-11	s	METAL, CHIP 750 0.50% 1/10W
R541	1-216-057-00	s	METAL, CHIP 2.2K 5% 1/10W
R542	1-216-049-91	s	METAL, CHIP 1K 5% 1/10W
R543	1-216-065-00	s	METAL, CHIP 4.7K 5% 1/10W
R544	1-216-025-11	s	METAL, CHIP 100 5% 1/10W
R545	1-216-025-11	s	METAL, CHIP 100 5% 1/10W
R546	1-216-025-11	s	METAL, CHIP 100 5% 1/10W
R547	1-216-065-00	s	METAL, CHIP 4.7K 5% 1/10W
R548	1-216-025-11	s	METAL, CHIP 100 5% 1/10W
R549	1-216-065-00	s	METAL, CHIP 4.7K 5% 1/10W
R550	1-216-051-00	s	METAL, CHIP 1.2K 5% 1/10W
R563	1-216-648-11	s	METAL, CHIP 750 0.50% 1/10W
R564	1-216-055-00	s	METAL, CHIP 1.8K 5% 1/10W
R565	1-216-648-11	s	METAL, CHIP 750 0.50% 1/10W
R566	1-216-295-11	s	CONDUCTOR, CHIP 0
R567	1-216-067-00	s	METAL, CHIP 5.6K 5% 1/10W
R568	1-216-033-00	s	METAL, CHIP 220 5% 1/10W
R569	1-208-777-11	s	METAL, CHIP 620 0.50% 1/10W
R570	1-216-097-00	s	METAL, CHIP 100K 5% 1/10W
R571	1-216-049-91	s	METAL, CHIP 1K 5% 1/10W
R572	1-216-045-00	s	METAL, CHIP 680 5% 1/10W
R573	1-208-802-11	s	METAL, CHIP 6.8K 0.50% 1/10W
R574	1-216-648-11	s	METAL, CHIP 750 0.50% 1/10W
R575	1-216-057-00	s	METAL, CHIP 2.2K 5% 1/10W
R576	1-216-025-11	s	METAL, CHIP 100 5% 1/10W
R577	1-216-065-00	s	METAL, CHIP 4.7K 5% 1/10W
R578	1-216-065-00	s	METAL, CHIP 4.7K 5% 1/10W
R579	1-216-065-00	s	METAL, CHIP 4.7K 5% 1/10W
R580	1-216-065-00	s	METAL, CHIP 4.7K 5% 1/10W
R581	1-216-025-11	s	METAL, CHIP 100 5% 1/10W
R582	1-216-065-00	s	METAL, CHIP 4.7K 5% 1/10W
R585	1-216-049-91	s	METAL, CHIP 1K 5% 1/10W
R586	1-216-033-00	s	METAL, CHIP 220 5% 1/10W
R588	1-208-799-11	s	METAL, CHIP 5.1K 0.50% 1/10W
R589	1-208-799-11	s	METAL, CHIP 5.1K 0.50% 1/10W
R590	1-216-033-00	s	METAL, CHIP 220 5% 1/10W
R591	1-216-081-00	s	METAL, CHIP 22K 5% 1/10W
R592	1-216-069-00	s	METAL, CHIP 6.8K 5% 1/10W
R593	1-216-049-91	s	METAL, CHIP 1K 5% 1/10W
R594	1-216-025-11	s	METAL, CHIP 100 5% 1/10W
R595	1-216-025-11	s	METAL, CHIP 100 5% 1/10W
R596	1-216-025-11	s	METAL, CHIP 100 5% 1/10W
R597	1-216-025-11	s	METAL, CHIP 100 5% 1/10W
R598	1-216-065-00	s	METAL, CHIP 4.7K 5% 1/10W
R599	1-216-065-00	s	METAL, CHIP 4.7K 5% 1/10W
R600	1-216-065-00	s	METAL, CHIP 4.7K 5% 1/10W
R601	1-216-065-00	s	METAL, CHIP 4.7K 5% 1/10W
R602	1-216-081-00	s	METAL, CHIP 22K 5% 1/10W
R603	1-208-807-11	s	METAL, CHIP 11K 0.50% 1/10W
R604	1-208-782-11	s	METAL, CHIP 1K 0.50% 1/10W
R605	1-208-782-11	s	METAL, CHIP 1K 0.50% 1/10W
R606	1-216-295-11	s	CONDUCTOR, CHIP 0
R610	1-216-057-00	s	METAL, CHIP 2.2K 5% 1/10W
R611	1-216-057-00	s	METAL, CHIP 2.2K 5% 1/10W
R612	1-216-057-00	s	METAL, CHIP 2.2K 5% 1/10W
R614	1-216-057-00	s	METAL, CHIP 2.2K 5% 1/10W
R615	1-216-057-00	s	METAL, CHIP 2.2K 5% 1/10W
R616	1-216-057-00	s	METAL, CHIP 2.2K 5% 1/10W
R624	1-208-793-11	s	METAL, CHIP 3K 0.50% 1/10W

(ES-20/20P BOARD[board suffix -12])

Ref. No. or Q'ty	Part No.	SP	Description
R627	1-216-295-11	s	CONDUCTOR, CHIP 0
R628	1-208-800-11	s	METAL, CHIP 5.6K 0.50% 1/10W
R629	1-208-818-11	s	METAL, CHIP 33K 0.50% 1/10W
R630	1-216-081-00	s	METAL, CHIP 22K 5% 1/10W
R631	1-216-041-00	s	METAL, CHIP 470 5% 1/10W
R632	1-216-081-00	s	METAL, CHIP 22K 5% 1/10W
R633	1-216-073-00	s	METAL, CHIP 10K 5% 1/10W
R634	1-208-770-11	s	METAL, CHIP 330 0.50% 1/10W
R635	1-216-047-91	s	METAL, CHIP 820 5% 1/10W
R636	1-208-770-11	s	METAL, CHIP 330 0.50% 1/10W
R637	1-216-041-00	s	METAL, CHIP 470 5% 1/10W
R638	1-208-809-11	s	METAL, CHIP 13K 0.50% 1/10W
R639	1-208-784-11	s	METAL, CHIP 1.2K 0.50% 1/10W
R640	1-216-081-00	s	METAL, CHIP 22K 5% 1/10W
R641	1-208-796-11	s	METAL, CHIP 3.9K 0.50% 1/10W
R643	1-216-689-11	s	METAL, CHIP 39K 0.50% 1/10W
R644	1-208-789-11	s	METAL, CHIP 2K 0.50% 1/10W
R645	1-216-025-11	s	METAL, CHIP 100 5% 1/10W
R646	1-216-121-91	s	METAL, CHIP 1M 5% 1/10W
R647	1-216-097-00	s	METAL, CHIP 100K 5% 1/10W
R648	1-216-049-91	s	METAL, CHIP 1K 5% 1/10W
R649	1-208-793-11	s	METAL, CHIP 3K 0.50% 1/10W
R651	1-208-796-11	s	METAL, CHIP 3.9K 0.50% 1/10W
R652	1-216-057-00	s	METAL, CHIP 2.2K 5% 1/10W
R654	1-208-769-11	s	METAL, CHIP 300 0.50% 1/10W
R655	1-216-041-00	s	METAL, CHIP 470 5% 1/10W
R656	1-216-057-00	s	METAL, CHIP 2.2K 5% 1/10W
R657	1-216-033-00	s	METAL, CHIP 220 5% 1/10W
R658	1-208-796-11	s	METAL, CHIP 3.9K 0.50% 1/10W
R659	1-216-081-00	s	METAL, CHIP 22K 5% 1/10W
R661	1-208-784-11	s	METAL, CHIP 1.2K 0.50% 1/10W
R662	1-216-689-11	s	METAL, CHIP 39K 0.50% 1/10W
R663	1-208-789-11	s	METAL, CHIP 2K 0.50% 1/10W
R664	1-216-025-11	s	METAL, CHIP 100 5% 1/10W
R665	1-216-121-91	s	METAL, CHIP 1M 5% 1/10W
R666	1-216-097-00	s	METAL, CHIP 100K 5% 1/10W
R667	1-216-097-00	s	METAL, CHIP 100K 5% 1/10W
R668	1-216-049-91	s	METAL, CHIP 1K 5% 1/10W
R669	1-208-793-11	s	METAL, CHIP 3K 0.50% 1/10W
R671	1-208-799-11	s	METAL, CHIP 5.1K 0.50% 1/10W
R672	1-216-057-00	s	METAL, CHIP 2.2K 5% 1/10W
R674	1-208-768-11	s	METAL, CHIP 240 0.50% 1/10W
R675	1-216-041-00	s	METAL, CHIP 470 5% 1/10W
R676	1-216-057-00	s	METAL, CHIP 2.2K 5% 1/10W
R677	1-216-049-91	s	METAL, CHIP 1K 5% 1/10W
R678	1-208-796-11	s	METAL, CHIP 3.9K 0.50% 1/10W
R679	1-216-081-00	s	METAL, CHIP 22K 5% 1/10W
R681	1-208-784-11	s	METAL, CHIP 1.2K 0.50% 1/10W
R682	1-216-689-11	s	METAL, CHIP 39K 0.50% 1/10W
R683	1-208-789-11	s	METAL, CHIP 2K 0.50% 1/10W
R684	1-216-025-11	s	METAL, CHIP 100 5% 1/10W
R685	1-216-121-91	s	METAL, CHIP 1M 5% 1/10W
R686	1-216-097-00	s	METAL, CHIP 100K 5% 1/10W
R687	1-216-097-00	s	METAL, CHIP 100K 5% 1/10W
R688	1-216-049-91	s	METAL, CHIP 1K 5% 1/10W
R689	1-216-033-00	s	METAL, CHIP 220 5% 1/10W
R690	1-208-797-11	s	METAL, CHIP 4.3K 0.50% 1/10W
R691	1-216-049-91	s	METAL, CHIP 1K 5% 1/10W
R692	1-216-049-91	s	METAL, CHIP 1K 5% 1/10W

(ES-20/20P BOARD[board suffix -12])

Ref. No. or Q'ty	Part No.	SP	Description
R693	1-216-049-91	s	METAL, CHIP 1K 5% 1/10W
R694	1-216-065-00	s	METAL, CHIP 4.7K 5% 1/10W
R695	1-216-073-00	s	METAL, CHIP 10K 5% 1/10W
R696	1-216-073-00	s	METAL, CHIP 10K 5% 1/10W
R697	1-216-073-00	s	METAL, CHIP 10K 5% 1/10W
R698	1-216-049-91	s	METAL, CHIP 1K 5% 1/10W
R701	1-216-049-91	s	METAL, CHIP 1K 5% 1/10W
R702	1-208-799-11	s	METAL, CHIP 5.1K 0.50% 1/10W
R703	1-208-799-11	s	METAL, CHIP 5.1K 0.50% 1/10W
R704	1-216-033-00	s	METAL, CHIP 220 5% 1/10W
R705	1-216-033-00	s	METAL, CHIP 220 5% 1/10W
R706	1-216-648-11	s	METAL, CHIP 750 0.50% 1/10W
R710	1-208-838-91	s	METAL, CHIP 220K 0.50% 1/10W
R711	1-208-838-91	s	METAL, CHIP 220K 0.50% 1/10W
R712	1-208-813-11	s	METAL, CHIP 20K 0.50% 1/10W [for J,UC]
R712	1-208-809-11	s	METAL, CHIP 13K 0.50% 1/10W [for CE]
R713	1-208-813-11	s	METAL, CHIP 20K 0.50% 1/10W [for J,UC]
R713	1-208-809-11	s	METAL, CHIP 13K 0.50% 1/10W [for CE]
R714	1-208-813-11	s	METAL, CHIP 20K 0.50% 1/10W [for J,UC]
R714	1-208-809-11	s	METAL, CHIP 13K 0.50% 1/10W [for CE]
R715	1-208-810-11	s	METAL, CHIP 15K 0.50% 1/10W [for J,UC]
R715	1-208-820-11	s	METAL, CHIP 39K 0.50% 1/10W [for CE]
R716	1-208-810-11	s	METAL, CHIP 15K 0.50% 1/10W [for J,UC]
R716	1-208-820-11	s	METAL, CHIP 39K 0.50% 1/10W [for CE]
R717	1-208-810-11	s	METAL, CHIP 15K 0.50% 1/10W [for J,UC]
R717	1-208-820-11	s	METAL, CHIP 39K 0.50% 1/10W [for CE]
R718	1-216-061-00	s	METAL, CHIP 3.3K 5% 1/10W [for J,UC]
R718	1-216-055-00	s	METAL, CHIP 1.8K 5% 1/10W [for CE]
R719	1-216-061-00	s	METAL, CHIP 3.3K 5% 1/10W [for J,UC]
R719	1-216-055-00	s	METAL, CHIP 1.8K 5% 1/10W [for CE]
R720	1-216-061-00	s	METAL, CHIP 3.3K 5% 1/10W [for J,UC]
R720	1-216-055-00	s	METAL, CHIP 1.8K 5% 1/10W [for CE]
R721	1-208-751-91	s	METAL, CHIP 51 0.50% 1/10W
R722	1-208-797-11	s	METAL, CHIP 4.3K 0.50% 1/10W
R723	1-216-049-91	s	METAL, CHIP 1K 5% 1/10W
R724	1-216-025-11	s	METAL, CHIP 100 5% 1/10W
R725	1-208-797-11	s	METAL, CHIP 4.3K 0.50% 1/10W
R726	1-216-049-91	s	METAL, CHIP 1K 5% 1/10W
R727	1-216-025-11	s	METAL, CHIP 100 5% 1/10W
R728	1-208-797-11	s	METAL, CHIP 4.3K 0.50% 1/10W
R729	1-216-049-91	s	METAL, CHIP 1K 5% 1/10W
R730	1-216-025-11	s	METAL, CHIP 100 5% 1/10W
R731	1-216-603-11	s	METAL, CHIP 10 0.50% 1/10W
R732	1-208-768-11	s	METAL, CHIP 240 0.50% 1/10W
R733	1-208-798-11	s	METAL, CHIP 4.7K 0.50% 1/10W
R734	1-216-607-11	s	METAL, CHIP 15 0.50% 1/10W

(ES-20/20P BOARD[board suffix -12])

Ref. No. or Q'ty	Part No.	SP	Description
R735	1-208-760-11	s	METAL, CHIP 120 0.50% 1/10W
R736	1-208-791-11	s	METAL, CHIP 2.4K 0.50% 1/10W
R737	1-216-295-11	s	CONDUCTOR, CHIP 0
R738	1-208-751-91	s	METAL, CHIP 51 0.50% 1/10W
R739	1-208-809-11	s	METAL, CHIP 13K 0.50% 1/10W
R741	1-208-806-11	s	METAL, CHIP 10K 0.50% 1/10W
R742	1-208-773-11	s	METAL, CHIP 430 0.50% 1/10W
R743	1-208-784-11	s	METAL, CHIP 1.2K 0.50% 1/10W
R744	1-208-794-11	s	METAL, CHIP 3.3K 0.50% 1/10W
R749	1-211-963-11	s	METAL, CHIP 30 0.50% 1/10W
R750	1-208-755-11	s	METAL, CHIP 75 0.50% 1/10W
R751	1-208-796-11	s	METAL, CHIP 3.9K 0.50% 1/10W
R752	1-211-963-11	s	METAL, CHIP 30 0.50% 1/10W
R753	1-208-775-11	s	METAL, CHIP 510 0.50% 1/10W
R754	1-208-813-11	s	METAL, CHIP 20K 0.50% 1/10W
R755	1-216-081-00	s	METAL, CHIP 22K 5% 1/10W
R756	1-208-784-11	s	METAL, CHIP 1.2K 0.50% 1/10W
R757	1-208-789-11	s	METAL, CHIP 2K 0.50% 1/10W
R758	1-216-089-91	s	METAL, CHIP 47k 5% 1/10W
R759	1-216-655-11	s	METAL, CHIP 1.5K 0.50% 1/10W
R760	1-208-789-11	s	METAL, CHIP 2K 0.50% 1/10W
R761	1-216-049-91	s	METAL, CHIP 1K 5% 1/10W
R762	1-208-799-11	s	METAL, CHIP 5.1K 0.50% 1/10W
R763	1-208-793-11	s	METAL, CHIP 3K 0.50% 1/10W
R764	1-208-762-11	s	METAL, CHIP 150 0.50% 1/10W [for J,UC]
R764	1-208-764-11	s	METAL, CHIP 180 0.50% 1/10W [for CE]
R765	1-208-806-11	s	METAL, CHIP 10K 0.50% 1/10W
R766	1-216-079-00	s	METAL, CHIP 18K 5% 1/10W
R767	1-216-081-00	s	METAL, CHIP 22K 5% 1/10W
R768	1-216-089-91	s	METAL, CHIP 47k 5% 1/10W
R769	1-216-073-00	s	METAL, CHIP 10K 5% 1/10W
R770	1-216-097-00	s	METAL, CHIP 100K 5% 1/10W
R771	1-216-295-11	s	CONDUCTOR, CHIP 0
R772	1-208-778-11	s	METAL, CHIP 680 0.50% 1/10W
R773	1-208-802-11	s	METAL, CHIP 6.8K 0.50% 1/10W
R774	1-211-960-11	s	METAL, CHIP 24 0.50% 1/10W
R775	1-208-765-11	s	METAL, CHIP 200 0.50% 1/10W
R776	1-208-795-11	s	METAL, CHIP 3.6K 0.50% 1/10W
R777	1-216-081-00	s	METAL, CHIP 22K 5% 1/10W
R778	1-216-089-91	s	METAL, CHIP 47k 5% 1/10W
R779	1-208-784-11	s	METAL, CHIP 1.2K 0.50% 1/10W
R780	1-208-789-11	s	METAL, CHIP 2K 0.50% 1/10W
R781	1-216-655-11	s	METAL, CHIP 1.5K 0.50% 1/10W
R782	1-208-789-11	s	METAL, CHIP 2K 0.50% 1/10W
R783	1-216-049-91	s	METAL, CHIP 1K 5% 1/10W
R784	1-208-799-11	s	METAL, CHIP 5.1K 0.50% 1/10W
R785	1-208-793-11	s	METAL, CHIP 3K 0.50% 1/10W
R786	1-208-760-11	s	METAL, CHIP 120 0.50% 1/10W [for J,UC]
R786	1-208-762-11	s	METAL, CHIP 150 0.50% 1/10W [for CE]
R787	1-208-806-11	s	METAL, CHIP 10K 0.50% 1/10W
R788	1-216-079-00	s	METAL, CHIP 18K 5% 1/10W
R789	1-216-081-00	s	METAL, CHIP 22K 5% 1/10W
R790	1-216-089-91	s	METAL, CHIP 47k 5% 1/10W
R791	1-216-073-00	s	METAL, CHIP 10K 5% 1/10W
R792	1-216-097-00	s	METAL, CHIP 100K 5% 1/10W

(ES-20/20P BOARD[board suffix -12])

Ref. No. or Q'ty	Part No.	SP	Description
R793	1-216-607-11	s	METAL, CHIP 15 0.50% 1/10W
R794	1-216-071-00	s	METAL, CHIP 8.2K 5% 1/10W
R795	1-216-071-00	s	METAL, CHIP 8.2K 5% 1/10W
R796	1-216-295-11	s	CONDUCTOR, CHIP 0 [for J,UC]
R800	1-216-025-11	s	METAL, CHIP 100 5% 1/10W
R801	1-208-784-11	s	METAL, CHIP 1.2K 0.50% 1/10W
R802	1-216-053-00	s	METAL, CHIP 1.5K 5% 1/10W
R803	1-208-797-11	s	METAL, CHIP 4.3K 0.50% 1/10W
R804	1-216-065-00	s	METAL, CHIP 4.7K 5% 1/10W [for J,UC]
R805	1-216-065-00	s	METAL, CHIP 4.7K 5% 1/10W
R806	1-208-797-11	s	METAL, CHIP 4.3K 0.50% 1/10W
R807	1-208-815-11	s	METAL, CHIP 24K 0.50% 1/10W [for J,UC]
R809	1-216-055-00	s	METAL, CHIP 1.8K 5% 1/10W
R810	1-216-055-00	s	METAL, CHIP 1.8K 5% 1/10W
R811	1-216-065-00	s	METAL, CHIP 4.7K 5% 1/10W
R812	1-208-806-11	s	METAL, CHIP 10K 0.50% 1/10W
R813	1-216-065-00	s	METAL, CHIP 4.7K 5% 1/10W
R814	1-208-817-11	s	METAL, CHIP 30K 0.50% 1/10W
R816	1-208-789-11	s	METAL, CHIP 2K 0.50% 1/10W
R818	1-208-799-11	s	METAL, CHIP 5.1K 0.50% 1/10W
R820	1-208-790-11	s	METAL, CHIP 2.2K 0.50% 1/10W
R821	1-208-778-11	s	METAL, CHIP 680 0.50% 1/10W
R822	1-208-788-11	s	METAL, CHIP 1.8K 0.50% 1/10W
R823	1-216-025-11	s	METAL, CHIP 100 5% 1/10W
R824	1-216-057-00	s	METAL, CHIP 2.2K 5% 1/10W
R825	1-208-793-11	s	METAL, CHIP 3K 0.50% 1/10W
R826	1-208-791-11	s	METAL, CHIP 2.4K 0.50% 1/10W [for J,UC]
R826	1-208-790-11	s	METAL, CHIP 2.2K 0.50% 1/10W [for CE]
R827	1-208-782-11	s	METAL, CHIP 1K 0.50% 1/10W
R828	1-216-057-00	s	METAL, CHIP 2.2K 5% 1/10W
R829	1-216-057-00	s	METAL, CHIP 2.2K 5% 1/10W
R830	1-216-057-00	s	METAL, CHIP 2.2K 5% 1/10W
R831	1-208-825-11	s	METAL, CHIP 62K 0.50% 1/10W
R832	1-208-774-11	s	METAL, CHIP 470 0.50% 1/10W
R833	1-208-774-11	s	METAL, CHIP 470 0.50% 1/10W
R834	1-216-065-00	s	METAL, CHIP 4.7K 5% 1/10W
R835	1-216-055-00	s	METAL, CHIP 1.8K 5% 1/10W
R836	1-216-055-00	s	METAL, CHIP 1.8K 5% 1/10W
R837	1-216-065-00	s	METAL, CHIP 4.7K 5% 1/10W
R838	1-208-804-11	s	METAL, CHIP 8.2K 0.50% 1/10W [for J,UC]
R838	1-208-806-11	s	METAL, CHIP 10K 0.50% 1/10W [for CE]
R839	1-216-065-00	s	METAL, CHIP 4.7K 5% 1/10W
R840	1-216-025-11	s	METAL, CHIP 100 5% 1/10W
R841	1-216-065-00	s	METAL, CHIP 4.7K 5% 1/10W
R842	1-208-818-11	s	METAL, CHIP 33K 0.50% 1/10W
R843	1-208-782-11	s	METAL, CHIP 1K 0.50% 1/10W
R844	1-208-799-11	s	METAL, CHIP 5.1K 0.50% 1/10W
R845	1-216-033-00	s	METAL, CHIP 220 5% 1/10W
R846	1-216-067-00	s	METAL, CHIP 5.6K 5% 1/10W
R848	1-216-057-00	s	METAL, CHIP 2.2K 5% 1/10W
R849	1-208-797-11	s	METAL, CHIP 4.3K 0.50% 1/10W
R850	1-208-784-11	s	METAL, CHIP 1.2K 0.50% 1/10W
R851	1-208-790-11	s	METAL, CHIP 2.2K 0.50% 1/10W [for J,UC]

(ES-20/20P BOARD[board suffix -12])

Ref. No. or Q'ty	Part No.	SP	Description
R851	1-208-791-11	s	METAL, CHIP 2.4K 0.50% 1/10W [for CE]
R852	1-216-025-11	s	METAL, CHIP 100 5% 1/10W
R853	1-208-791-11	s	METAL, CHIP 2.4K 0.50% 1/10W
R854	1-208-782-11	s	METAL, CHIP 1K 0.50% 1/10W
R855	1-216-057-00	s	METAL, CHIP 2.2K 5% 1/10W
R856	1-216-057-00	s	METAL, CHIP 2.2K 5% 1/10W
R857	1-216-057-00	s	METAL, CHIP 2.2K 5% 1/10W
R858	1-208-789-11	s	METAL, CHIP 2K 0.50% 1/10W
R859	1-208-773-11	s	METAL, CHIP 430 0.50% 1/10W [for J,UC]
R859	1-216-648-11	s	METAL, CHIP 750 0.50% 1/10W [for CE]
R860	1-208-773-11	s	METAL, CHIP 430 0.50% 1/10W [for J,UC]
R860	1-216-648-11	s	METAL, CHIP 750 0.50% 1/10W [for CE]
R861	1-208-774-11	s	METAL, CHIP 470 0.50% 1/10W
R862	1-208-820-11	s	METAL, CHIP 39K 0.50% 1/10W [for J,UC]
R863	1-208-789-11	s	METAL, CHIP 2K 0.50% 1/10W
R864	1-216-648-11	s	METAL, CHIP 750 0.50% 1/10W [for J,UC]
R864	1-208-778-11	s	METAL, CHIP 680 0.50% 1/10W [for CE]
R865	1-216-053-00	s	METAL, CHIP 1.5K 5% 1/10W
R866	1-216-648-11	s	METAL, CHIP 750 0.50% 1/10W [for J,UC]
R866	1-208-778-11	s	METAL, CHIP 680 0.50% 1/10W [for CE]
R867	1-216-065-00	s	METAL, CHIP 4.7K 5% 1/10W
R868	1-216-063-00	s	METAL, CHIP 3.9K 5% 1/10W
R869	1-208-793-11	s	METAL, CHIP 3K 0.50% 1/10W [for J,UC]
R869	1-208-758-11	s	METAL, CHIP 100 0.50% 1/10W [for CE]
R870	1-208-793-11	s	METAL, CHIP 3K 0.50% 1/10W [for J,UC]
R871	1-208-775-11	s	METAL, CHIP 510 0.50% 1/10W [for J,UC]
R872	1-208-806-11	s	METAL, CHIP 10K 0.50% 1/10W
R873	1-208-777-11	s	METAL, CHIP 620 0.50% 1/10W
R874	1-208-790-11	s	METAL, CHIP 2.2K 0.50% 1/10W
R875	1-208-790-11	s	METAL, CHIP 2.2K 0.50% 1/10W
R876	1-208-800-11	s	METAL, CHIP 5.6K 0.50% 1/10W
R877	1-216-085-00	s	METAL, CHIP 33K 5% 1/10W
R878	1-208-782-11	s	METAL, CHIP 1K 0.50% 1/10W
R879	1-208-814-91	s	METAL, CHIP 22K 0.50% 1/10W
R880	1-208-814-91	s	METAL, CHIP 22K 0.50% 1/10W
R881	1-208-804-11	s	METAL, CHIP 8.2K 0.50% 1/10W
R882	1-208-776-11	s	METAL, CHIP 560 0.50% 1/10W [for J,UC]
R882	1-208-782-11	s	METAL, CHIP 1K 0.50% 1/10W [for CE]
R883	1-216-073-00	s	METAL, CHIP 10K 5% 1/10W
R884	1-208-818-11	s	METAL, CHIP 33K 0.50% 1/10W
R885	1-208-806-11	s	METAL, CHIP 10K 0.50% 1/10W [for J,UC]
R885	1-208-808-11	s	METAL, CHIP 12K 0.50% 1/10W [for CE]
R886	1-208-818-11	s	METAL, CHIP 33K 0.50% 1/10W
R887	1-208-799-11	s	METAL, CHIP 5.1K 0.50% 1/10W

(ES-20/20P BOARD[board suffix -12])

Ref. No. or Q'ty	Part No.	SP	Description
R888	1-208-799-11	s	METAL, CHIP 5.1K 0.50% 1/10W
R889	1-208-793-11	s	METAL, CHIP 3K 0.50% 1/10W [for J,UC]
R890	1-208-768-11	s	METAL, CHIP 240 0.50% 1/10W [for J,UC]
R891	1-208-793-11	s	METAL, CHIP 3K 0.50% 1/10W [for J,UC]
R891	1-208-758-11	s	METAL, CHIP 100 0.50% 1/10W [for CE]
R892	1-216-053-00	s	METAL, CHIP 1.5K 5% 1/10W
R893	1-208-798-11	s	METAL, CHIP 4.7K 0.50% 1/10W [for J,UC]
R893	1-208-806-11	s	METAL, CHIP 10K 0.50% 1/10W [for CE]
R894	1-216-065-00	s	METAL, CHIP 4.7K 5% 1/10W
R895	1-208-818-11	s	METAL, CHIP 33K 0.50% 1/10W [for J,UC]
R896	1-208-775-11	s	METAL, CHIP 510 0.50% 1/10W [for J,UC]
R896	1-208-777-11	s	METAL, CHIP 620 0.50% 1/10W [for CE]
R897	1-208-806-11	s	METAL, CHIP 10K 0.50% 1/10W
R898	1-208-790-11	s	METAL, CHIP 2.2K 0.50% 1/10W
R899	1-216-655-11	s	METAL, CHIP 1.5K 0.50% 1/10W
R900	1-208-800-11	s	METAL, CHIP 5.6K 0.50% 1/10W
R901	1-216-085-00	s	METAL, CHIP 33K 5% 1/10W
R902	1-208-782-11	s	METAL, CHIP 1K 0.50% 1/10W
R903	1-208-814-91	s	METAL, CHIP 22K 0.50% 1/10W
R904	1-208-814-91	s	METAL, CHIP 22K 0.50% 1/10W
R905	1-216-097-00	s	METAL, CHIP 100K 5% 1/10W [for J,UC]
R906	1-216-081-00	s	METAL, CHIP 22K 5% 1/10W [for CE]
R907	1-216-065-00	s	METAL, CHIP 4.7K 5% 1/10W
R908	1-216-065-00	s	METAL, CHIP 4.7K 5% 1/10W
R909	1-216-049-91	s	METAL, CHIP 1K 5% 1/10W
R910	1-216-049-91	s	METAL, CHIP 1K 5% 1/10W
R911	1-216-065-00	s	METAL, CHIP 4.7K 5% 1/10W
R912	1-211-960-11	s	METAL, CHIP 24 0.50% 1/10W
R913	1-216-065-00	s	METAL, CHIP 4.7K 5% 1/10W
R914	1-216-061-00	s	METAL, CHIP 3.3K 5% 1/10W
R915	1-216-655-11	s	METAL, CHIP 1.5K 0.50% 1/10W
R916	1-216-057-00	s	METAL, CHIP 2.2K 5% 1/10W
R917	1-216-049-91	s	METAL, CHIP 1K 5% 1/10W
R918	1-216-057-00	s	METAL, CHIP 2.2K 5% 1/10W
R919	1-216-073-00	s	METAL, CHIP 10K 5% 1/10W
R920	1-216-073-00	s	METAL, CHIP 10K 5% 1/10W
R921	1-208-813-11	s	METAL, CHIP 20K 0.50% 1/10W [for J,UC]
R921	1-208-811-11	s	METAL, CHIP 16K 0.50% 1/10W [for CE]
R922	1-216-067-00	s	METAL, CHIP 5.6K 5% 1/10W
R923	1-208-782-11	s	METAL, CHIP 1K 0.50% 1/10W
R924	1-208-782-11	s	METAL, CHIP 1K 0.50% 1/10W
R925	1-216-655-11	s	METAL, CHIP 1.5K 0.50% 1/10W [for J,UC]
R925	1-208-788-11	s	METAL, CHIP 1.8K 0.50% 1/10W [for CE]
R926	1-208-800-11	s	METAL, CHIP 5.6K 0.50% 1/10W
R927	1-208-800-11	s	METAL, CHIP 5.6K 0.50% 1/10W
R928	1-216-025-11	s	METAL, CHIP 100 5% 1/10W
R929	1-216-057-00	s	METAL, CHIP 2.2K 5% 1/10W

(ES-20/20P BOARD[board suffix -12])

Ref. No. or Q'ty	Part No.	SP	Description
R930	1-208-837-11	s	METAL, CHIP 200K 0.50% 1/10W
R931	1-216-025-11	s	METAL, CHIP 100 5% 1/10W
R932	1-216-057-00	s	METAL, CHIP 2.2K 5% 1/10W
R933	1-216-057-00	s	METAL, CHIP 2.2K 5% 1/10W
R934	1-208-775-11	s	METAL, CHIP 510 0.50% 1/10W
R935	1-208-837-11	s	METAL, CHIP 200K 0.50% 1/10W
R936	1-208-782-11	s	METAL, CHIP 1K 0.50% 1/10W
R937	1-208-755-11	s	METAL, CHIP 75 0.50% 1/10W
R938	1-216-295-11	s	CONDUCTOR, CHIP 0
R939	1-216-648-11	s	METAL, CHIP 750 0.50% 1/10W
R940	1-216-648-11	s	METAL, CHIP 750 0.50% 1/10W
R941	1-208-755-11	s	METAL, CHIP 75 0.50% 1/10W
R942	1-216-295-11	s	CONDUCTOR, CHIP 0
R943	1-216-648-11	s	METAL, CHIP 750 0.50% 1/10W
R944	1-216-648-11	s	METAL, CHIP 750 0.50% 1/10W
R945	1-208-755-11	s	METAL, CHIP 75 0.50% 1/10W
R946	1-216-073-00	s	METAL, CHIP 10K 5% 1/10W
R947	1-216-073-00	s	METAL, CHIP 10K 5% 1/10W
R948	1-208-775-11	s	METAL, CHIP 510 0.50% 1/10W
R950	1-208-782-11	s	METAL, CHIP 1K 0.50% 1/10W
R951	1-208-755-11	s	METAL, CHIP 75 0.50% 1/10W
R952	1-216-295-11	s	CONDUCTOR, CHIP 0
R953	1-216-648-11	s	METAL, CHIP 750 0.50% 1/10W
R954	1-216-648-11	s	METAL, CHIP 750 0.50% 1/10W
R955	1-208-755-11	s	METAL, CHIP 75 0.50% 1/10W
R956	1-216-295-11	s	CONDUCTOR, CHIP 0
R957	1-216-648-11	s	METAL, CHIP 750 0.50% 1/10W
R958	1-216-648-11	s	METAL, CHIP 750 0.50% 1/10W
R959	1-208-755-11	s	METAL, CHIP 75 0.50% 1/10W
R960	1-216-073-00	s	METAL, CHIP 10K 5% 1/10W
R961	1-216-073-00	s	METAL, CHIP 10K 5% 1/10W
R962	1-208-775-11	s	METAL, CHIP 510 0.50% 1/10W
R963	1-208-775-11	s	METAL, CHIP 510 0.50% 1/10W
R965	1-216-648-11	s	METAL, CHIP 750 0.50% 1/10W
R966	1-208-782-11	s	METAL, CHIP 1K 0.50% 1/10W
R967	1-208-782-11	s	METAL, CHIP 1K 0.50% 1/10W
R968	1-216-295-11	s	CONDUCTOR, CHIP 0
R970	1-216-648-11	s	METAL, CHIP 750 0.50% 1/10W
R971	1-216-648-11	s	METAL, CHIP 750 0.50% 1/10W
R972	1-208-755-11	s	METAL, CHIP 75 0.50% 1/10W
R973	1-208-755-11	s	METAL, CHIP 75 0.50% 1/10W
R975	1-216-063-00	s	METAL, CHIP 3.9K 5% 1/10W
R976	1-216-025-11	s	METAL, CHIP 100 5% 1/10W
R978	1-208-782-11	s	METAL, CHIP 1K 0.50% 1/10W [for J,UC]
R978	1-208-789-11	s	METAL, CHIP 2K 0.50% 1/10W [for CE]
R979	1-216-648-11	s	METAL, CHIP 750 0.50% 1/10W
R980	1-208-790-11	s	METAL, CHIP 2.2K 0.50% 1/10W
R982	1-208-780-11	s	METAL, CHIP 820 0.50% 1/10W [for J,UC]
R982	1-216-648-11	s	METAL, CHIP 750 0.50% 1/10W [for CE]
R983	1-208-782-11	s	METAL, CHIP 1K 0.50% 1/10W [for J,UC]
R983	1-208-789-11	s	METAL, CHIP 2K 0.50% 1/10W [for CE]
R984	1-216-648-11	s	METAL, CHIP 750 0.50% 1/10W
R985	1-208-790-11	s	METAL, CHIP 2.2K 0.50% 1/10W
R987	1-208-780-11	s	METAL, CHIP 820 0.50% 1/10W [for J,UC]

(ES-20/20P BOARD[board suffix -12])

Ref. No. or Q'ty	Part No.	SP	Description
R987	1-216-648-11	s	METAL, CHIP 750 0.50% 1/10W [for CE]
R988	1-218-753-11	s	METAL, CHIP 110K 0.50% 1/10W
R989	1-208-806-11	s	METAL, CHIP 10K 0.50% 1/10W
R990	1-208-790-11	s	METAL, CHIP 2.2K 0.50% 1/10W
R992	1-208-790-11	s	METAL, CHIP 2.2K 0.50% 1/10W
R993	1-208-755-11	s	METAL, CHIP 75 0.50% 1/10W
R994	1-208-801-11	s	METAL, CHIP 6.2K 0.50% 1/10W
R996	1-208-750-11	s	METAL, CHIP 47 0.50% 1/10W
R997	1-208-750-11	s	METAL, CHIP 47 0.50% 1/10W
R1000	1-216-033-00	s	METAL, CHIP 220 5% 1/10W
R1001	1-208-800-11	s	METAL, CHIP 5.6K 0.50% 1/10W
R1002	1-216-689-11	s	METAL, CHIP 39K 0.50% 1/10W
R1003	1-216-073-00	s	METAL, CHIP 10K 5% 1/10W
R1004	1-216-033-00	s	METAL, CHIP 220 5% 1/10W
R1005	1-208-800-11	s	METAL, CHIP 5.6K 0.50% 1/10W
R1006	1-216-689-11	s	METAL, CHIP 39K 0.50% 1/10W
R1007	1-216-073-00	s	METAL, CHIP 10K 5% 1/10W
R1008	1-216-033-00	s	METAL, CHIP 220 5% 1/10W
R1009	1-208-800-11	s	METAL, CHIP 5.6K 0.50% 1/10W
R1010	1-216-689-11	s	METAL, CHIP 39K 0.50% 1/10W
R1011	1-216-073-00	s	METAL, CHIP 10K 5% 1/10W
R1012	1-216-033-00	s	METAL, CHIP 220 5% 1/10W
R1013	1-208-800-11	s	METAL, CHIP 5.6K 0.50% 1/10W
R1014	1-216-085-00	s	METAL, CHIP 33K 5% 1/10W
R1015	1-216-073-00	s	METAL, CHIP 10K 5% 1/10W
R1017	1-216-025-11	s	METAL, CHIP 100 5% 1/10W
R1018	1-216-025-11	s	METAL, CHIP 100 5% 1/10W
R1019	1-216-025-11	s	METAL, CHIP 100 5% 1/10W
R1020	1-216-025-11	s	METAL, CHIP 100 5% 1/10W
R1021	1-216-061-00	s	METAL, CHIP 3.3K 5% 1/10W
R1022	1-216-033-00	s	METAL, CHIP 220 5% 1/10W
R1023	1-208-794-11	s	METAL, CHIP 3.3K 0.50% 1/10W
R1024	1-216-689-11	s	METAL, CHIP 39K 0.50% 1/10W
R1025	1-216-073-00	s	METAL, CHIP 10K 5% 1/10W
R1026	1-216-081-00	s	METAL, CHIP 22K 5% 1/10W
R1027	1-216-057-00	s	METAL, CHIP 2.2K 5% 1/10W
R1028	1-216-033-00	s	METAL, CHIP 220 5% 1/10W
R1029	1-208-797-11	s	METAL, CHIP 4.3K 0.50% 1/10W
R1030	1-216-689-11	s	METAL, CHIP 39K 0.50% 1/10W
R1031	1-216-073-00	s	METAL, CHIP 10K 5% 1/10W
R1032	1-216-081-00	s	METAL, CHIP 22K 5% 1/10W
R1033	1-216-057-00	s	METAL, CHIP 2.2K 5% 1/10W
R1034	1-216-033-00	s	METAL, CHIP 220 5% 1/10W
R1035	1-208-794-11	s	METAL, CHIP 3.3K 0.50% 1/10W
R1036	1-216-689-11	s	METAL, CHIP 39K 0.50% 1/10W
R1037	1-216-073-00	s	METAL, CHIP 10K 5% 1/10W
R1038	1-216-081-00	s	METAL, CHIP 22K 5% 1/10W
R1039	1-216-057-00	s	METAL, CHIP 2.2K 5% 1/10W
R1040	1-216-033-00	s	METAL, CHIP 220 5% 1/10W
R1041	1-208-797-11	s	METAL, CHIP 4.3K 0.50% 1/10W
R1042	1-216-689-11	s	METAL, CHIP 39K 0.50% 1/10W
R1043	1-216-073-00	s	METAL, CHIP 10K 5% 1/10W
R1044	1-216-081-00	s	METAL, CHIP 22K 5% 1/10W
R1045	1-216-057-00	s	METAL, CHIP 2.2K 5% 1/10W
R1046	1-208-758-11	s	METAL, CHIP 100 0.50% 1/10W
R1047	1-208-758-11	s	METAL, CHIP 100 0.50% 1/10W
R1048	1-208-758-11	s	METAL, CHIP 100 0.50% 1/10W

(ES-20/20P BOARD[board suffix -12])

Ref. No. or Q'ty	Part No.	SP	Description
R1049	1-208-758-11	s	METAL, CHIP 100 0.50% 1/10W
R1050	1-216-067-00	s	METAL, CHIP 5.6K 5% 1/10W
R1051	1-216-025-11	s	METAL, CHIP 100 5% 1/10W
R1052	1-216-073-00	s	METAL, CHIP 10K 5% 1/10W
R1053	1-208-782-11	s	METAL, CHIP 1K 0.50% 1/10W
R1054	1-208-820-11	s	METAL, CHIP 39K 0.50% 1/10W
R1055	1-216-057-00	s	METAL, CHIP 2.2K 5% 1/10W
R1056	1-216-073-00	s	METAL, CHIP 10K 5% 1/10W
R1057	1-216-295-11	s	CONDUCTOR, CHIP 0 [for CE]
R1058	1-216-059-00	s	METAL, CHIP 2.7K 5% 1/10W
R1059	1-216-073-00	s	METAL, CHIP 10K 5% 1/10W
R1060	1-216-033-00	s	METAL, CHIP 220 5% 1/10W
R1061	1-216-073-00	s	METAL, CHIP 10K 5% 1/10W
R1062	1-216-089-91	s	METAL, CHIP 47k 5% 1/10W
R1063	1-216-081-00	s	METAL, CHIP 22K 5% 1/10W
R1064	1-208-773-11	s	METAL, CHIP 430 0.50% 1/10W
R1066	1-216-065-00	s	METAL, CHIP 4.7K 5% 1/10W
R1067	1-216-055-00	s	METAL, CHIP 1.8K 5% 1/10W
R1068	1-216-055-00	s	METAL, CHIP 1.8K 5% 1/10W
R1069	1-216-025-11	s	METAL, CHIP 100 5% 1/10W
R1070	1-208-797-11	s	METAL, CHIP 4.3K 0.50% 1/10W
R1071	1-208-782-11	s	METAL, CHIP 1K 0.50% 1/10W
R1072	1-208-798-11	s	METAL, CHIP 4.7K 0.50% 1/10W
R1073	1-216-648-11	s	METAL, CHIP 750 0.50% 1/10W
R1074	1-208-774-11	s	METAL, CHIP 470 0.50% 1/10W
R1075	1-208-782-11	s	METAL, CHIP 1K 0.50% 1/10W
R1076	1-208-777-11	s	METAL, CHIP 620 0.50% 1/10W
R1077	1-216-648-11	s	METAL, CHIP 750 0.50% 1/10W
R1078	1-208-755-11	s	METAL, CHIP 75 0.50% 1/10W
R1079	1-208-755-11	s	METAL, CHIP 75 0.50% 1/10W
R1080	1-208-806-11	s	METAL, CHIP 10K 0.50% 1/10W
R1081	1-208-806-11	s	METAL, CHIP 10K 0.50% 1/10W
R1082	1-208-806-11	s	METAL, CHIP 10K 0.50% 1/10W
R1083	1-208-806-11	s	METAL, CHIP 10K 0.50% 1/10W
R1084	1-208-806-11	s	METAL, CHIP 10K 0.50% 1/10W
R1085	1-208-806-11	s	METAL, CHIP 10K 0.50% 1/10W
R1086	1-208-813-11	s	METAL, CHIP 20K 0.50% 1/10W
R1087	1-216-025-11	s	METAL, CHIP 100 5% 1/10W
R1088	1-216-025-11	s	METAL, CHIP 100 5% 1/10W
R1089	1-208-810-11	s	METAL, CHIP 15K 0.50% 1/10W
R1090	1-208-804-11	s	METAL, CHIP 8.2K 0.50% 1/10W
R1091	1-208-799-11	s	METAL, CHIP 5.1K 0.50% 1/10W
R1092	1-208-814-91	s	METAL, CHIP 22K 0.50% 1/10W
R1093	1-216-085-00	s	METAL, CHIP 33K 5% 1/10W
R1094	1-216-085-00	s	METAL, CHIP 33K 5% 1/10W
R1095	1-216-009-91	s	METAL, CHIP 22 5% 1/10W
R1096	1-216-009-91	s	METAL, CHIP 22 5% 1/10W
R1097	1-216-049-91	s	METAL, CHIP 1K 5% 1/10W
R1098	1-216-085-00	s	METAL, CHIP 33K 5% 1/10W
R1099	1-216-073-00	s	METAL, CHIP 10K 5% 1/10W
R1100	1-216-085-00	s	METAL, CHIP 33K 5% 1/10W
R1101	1-208-818-11	s	METAL, CHIP 33K 0.50% 1/10W
R1102	1-208-818-11	s	METAL, CHIP 33K 0.50% 1/10W
R1103	1-216-073-00	s	METAL, CHIP 10K 5% 1/10W
R1104	1-208-795-11	s	METAL, CHIP 3.6K 0.50% 1/10W
R1105	1-208-787-11	s	METAL, CHIP 1.6K 0.50% 1/10W
R1106	1-216-073-00	s	METAL, CHIP 10K 5% 1/10W
R1107	1-216-075-00	s	METAL, CHIP 12K 5% 1/10W
R1108	1-216-067-00	s	METAL, CHIP 5.6K 5% 1/10W

(ES-20/20P BOARD[board suffix -12])

Ref. No. or Q'ty	Part No.	SP	Description
R1109	1-216-073-00	s	METAL, CHIP 10K 5% 1/10W
R1110	1-208-808-11	s	METAL, CHIP 12K 0.50% 1/10W
R1111	1-208-810-11	s	METAL, CHIP 15K 0.50% 1/10W
R1112	1-208-795-11	s	METAL, CHIP 3.6K 0.50% 1/10W
R1113	1-208-787-11	s	METAL, CHIP 1.6K 0.50% 1/10W
R1114	1-208-814-91	s	METAL, CHIP 22K 0.50% 1/10W
R1115	1-208-814-91	s	METAL, CHIP 22K 0.50% 1/10W
R1118	1-216-073-00	s	METAL, CHIP 10K 5% 1/10W
R1121	1-216-295-11	s	CONDUCTOR, CHIP 0 [for CE]
R1122	1-216-295-11	s	CONDUCTOR, CHIP 0
R1123	1-216-295-11	s	CONDUCTOR, CHIP 0
R1124	1-216-295-11	s	CONDUCTOR, CHIP 0
R1125	1-216-295-11	s	CONDUCTOR, CHIP 0
R1126	1-216-097-00	s	METAL, CHIP 100K 5% 1/10W
R1127	1-216-097-00	s	METAL, CHIP 100K 5% 1/10W
R1128	1-216-097-00	s	METAL, CHIP 100K 5% 1/10W
R1129	1-216-049-91	s	METAL, CHIP 1K 5% 1/10W
R1130	1-216-073-00	s	METAL, CHIP 10K 5% 1/10W
R1131	1-216-025-11	s	METAL, CHIP 100 5% 1/10W
R1132	1-216-065-00	s	METAL, CHIP 4.7K 5% 1/10W
R1133	1-216-025-11	s	METAL, CHIP 100 5% 1/10W
R1134	1-216-065-00	s	METAL, CHIP 4.7K 5% 1/10W
R1135	1-216-025-11	s	METAL, CHIP 100 5% 1/10W
R1136	1-216-065-00	s	METAL, CHIP 4.7K 5% 1/10W
R1137	1-216-025-11	s	METAL, CHIP 100 5% 1/10W
R1138	1-216-065-00	s	METAL, CHIP 4.7K 5% 1/10W
R1139	1-216-025-11	s	METAL, CHIP 100 5% 1/10W
R1140	1-216-065-00	s	METAL, CHIP 4.7K 5% 1/10W
R1141	1-216-025-11	s	METAL, CHIP 100 5% 1/10W
R1142	1-216-065-00	s	METAL, CHIP 4.7K 5% 1/10W
R1143	1-216-073-00	s	METAL, CHIP 10K 5% 1/10W
R1144	1-216-073-00	s	METAL, CHIP 10K 5% 1/10W
R1145	1-216-073-00	s	METAL, CHIP 10K 5% 1/10W
R1146	1-216-073-00	s	METAL, CHIP 10K 5% 1/10W
R1147	1-216-097-00	s	METAL, CHIP 100K 5% 1/10W
R1148	1-216-009-91	s	METAL, CHIP 22 5% 1/10W
R1149	1-216-097-00	s	METAL, CHIP 100K 5% 1/10W
R1150	1-216-097-00	s	METAL, CHIP 100K 5% 1/10W
R1151	1-216-097-00	s	METAL, CHIP 100K 5% 1/10W
R1152	1-208-782-11	s	METAL, CHIP 1K 0.50% 1/10W
R2000	1-216-025-11	s	METAL, CHIP 100 5% 1/10W
R2001	1-216-057-00	s	METAL, CHIP 2.2K 5% 1/10W
R2002	1-216-025-11	s	METAL, CHIP 100 5% 1/10W
R2003	1-216-057-00	s	METAL, CHIP 2.2K 5% 1/10W
R2004	1-216-025-11	s	METAL, CHIP 100 5% 1/10W
R2005	1-216-057-00	s	METAL, CHIP 2.2K 5% 1/10W
R2006	1-216-025-11	s	METAL, CHIP 100 5% 1/10W
R2007	1-216-057-00	s	METAL, CHIP 2.2K 5% 1/10W
RV1	1-237-037-11	s	RES, ADJ METAL 20K
RV2	1-237-036-11	s	RES, ADJ METAL 10K
RV3	1-237-036-11	s	RES, ADJ METAL 10K
RV4	1-237-034-11	s	RES, ADJ METAL 2K
RV5	1-237-037-11	s	RES, ADJ METAL 20K
RV6	1-241-265-11	s	RES, ADJ, METAL 20K
RV7	1-241-265-11	s	RES, ADJ, METAL 20K
RV500	1-237-030-11	s	RES, ADJ METAL 100 [for J,UC]
RV500	1-237-031-11	s	RES, ADJ METAL 200 [for CE]
RV501	1-237-039-11	s	RES, ADJ METAL 100K

(ES-20/20P BOARD[board suffix -12])

Ref. No. or Q'ty	Part No.	SP	Description
RV502	1-237-032-11	s	RES, ADJ METAL 500
RV503	1-237-039-11	s	RES, ADJ METAL 100K
RV504	1-237-032-11	s	RES, ADJ METAL 500
RV505	1-237-030-11	s	RES, ADJ METAL 100 [for J,UC]
RV505	1-237-031-11	s	RES, ADJ METAL 200 [for CE]
RV506	1-237-034-11	s	RES, ADJ METAL 2K
RV507	1-237-033-11	s	RES, ADJ METAL 1K
RV508	1-237-031-11	s	RES, ADJ METAL 200
RV509	1-237-032-11	s	RES, ADJ METAL 500
RV510	1-237-031-11	s	RES, ADJ METAL 200
RV511	1-237-039-11	s	RES, ADJ METAL 100K
RV512	1-237-032-11	s	RES, ADJ METAL 500
RV513	1-237-031-11	s	RES, ADJ METAL 200
RV514	1-237-039-11	s	RES, ADJ METAL 100K
RV515	1-237-034-11	s	RES, ADJ METAL 2K
RV800	1-237-036-11	s	RES, ADJ METAL 10K [for J,UC]
RV801	1-237-035-11	s	RES, ADJ METAL 5K
RV802	1-237-033-11	s	RES, ADJ METAL 1K
RV803	1-237-035-11	s	RES, ADJ METAL 5K
RV804	1-237-033-11	s	RES, ADJ METAL 1K
RV805	1-237-035-11	s	RES, ADJ METAL 5K
RV806	1-237-032-11	s	RES, ADJ METAL 500
RV807	1-237-036-11	s	RES, ADJ METAL 10K
RV808	1-237-032-11	s	RES, ADJ METAL 500
RV809	1-237-035-11	s	RES, ADJ METAL 5K
RV810	1-237-033-11	s	RES, ADJ METAL 1K
RV811	1-237-033-11	s	RES, ADJ METAL 1K
RV812	1-237-033-11	s	RES, ADJ METAL 1K
RV813	1-237-032-11	s	RES, ADJ METAL 500
RV814	1-237-032-11	s	RES, ADJ METAL 500
RV1000	1-237-037-11	s	RES, ADJ METAL 20K
RV1001	1-237-036-11	s	RES, ADJ METAL 10K
RV1002	1-237-031-11	s	RES, ADJ METAL 200
RV1003	1-237-031-11	s	RES, ADJ METAL 200
S1	1-572-342-11	s	SWITCH, SLIDE [for J,UC]
S2	1-572-658-21	s	SWITCH, ROTARY
S3	1-571-259-11	s	SWITCH, SLIDE
S4	1-570-857-11	s	SWITCH, SLIDE [for J,UC]
S800	1-571-395-11	s	SWITCH, SLIDE
S801	1-571-395-11	s	SWITCH, SLIDE
S1000	1-564-948-21	o	PIN, CONNECTOR 3P

IO-140 BOARD

Ref. No. or Q'ty	Part No.	SP	Description
1pc	A-8315-048-A	o	MOUNTED CIRCUIT BOARD, IO-140
C1	1-137-106-11	s	FILM 0.022uF 20% 25V
C2	1-113-925-11	s	CERAMIC 0.01uF 20% 250V
C3	1-136-191-11	s	FILM 0.22uF 5% 250
C4	1-113-925-11	s	CERAMIC 0.01uF 20% 250V
C5	1-137-106-11	s	FILM 0.022uF 20% 25V
CN1	1-779-370-11	o	PIN, CONNECTOR (PC BOARD) 3P
CN2	1-580-837-11	o	PIN, CONNECTOR (PC BOARD) 3P
CN3	1-750-932-11	o	CONNECTOR, COAXIAL, FEMALE
CN4	1-750-932-11	o	CONNECTOR, COAXIAL, FEMALE
CN5	1-750-880-11	s	RECEPTACLE, COAXIAL CONNECTOR
L1	1-402-971-11	s	INDUCTOR 100uH
L2	1-408-142-21	s	INDUCTOR MICRO 22.5mH
L3	1-410-151-11	s	INDUCTOR 56uH
L4	1-402-971-11	s	INDUCTOR 100uH
L5	1-402-971-11	s	INDUCTOR 100uH
L6	1-402-971-11	s	INDUCTOR 100uH
L7	1-402-971-11	s	INDUCTOR 100uH

MB-693 BOARD

S/N 10001 - 11000[for UC]
S/N 30001 - 31000[for J]
S/N 40001 - 41000[for CE]

Ref. No. or Q'ty	Part No.	SP	Description
1pc	A-8315-052-A	o	MOUNTED CIRCUIT BOARD, MB-693
15pcs	7-627-554-28	s	SCREW, PRECISION +P 2X5 TYPE1
CN6	1-573-768-21	s	CONNECTOR (1.5MM)(SMD) 5P MALE
CN7	1-764-177-11	o	PIN, CONNECTOR (SMD)(1.5MM) 7P
CN8	1-764-643-21	s	PIN, CONNECTOR (SMD) 11P
CN9	1-766-383-11	o	CONNECTOR (1.5MM)(SMD) 12P MALE
CN10	1-691-591-11	s	PIN, CONNECTOR (1.5MM) (SMD)8P
CN11	1-764-177-11	o	PIN, CONNECTOR (SMD)(1.5MM) 7P
CN12	1-766-382-11	o	CONNECTOR (1.5MM)(SMD) 10P MALE
CN13	1-573-806-21	s	PIN, CONNECTOR (1.5MM) (SMD)6P
CN14	1-764-177-11	o	PIN, CONNECTOR (SMD)(1.5MM) 7P
CN15	1-750-934-21	o	PIN, CONNECTOR 20P
CN16	1-766-376-11	o	PIN, CONNECTOR (1.5MM)(SMD) 9P
CN17	1-750-935-21	o	PIN, CONNECTOR 30P
CN18	1-573-290-21	s	PIN, CONNECTOR (1.5MM) (SMD)4P
CN19	1-764-511-11	o	PIN, CONNECTOR (PC BOARD) 9P
CN20	1-764-509-11	o	PIN, CONNECTOR (PC BOARD) 3P
CN21	1-764-511-11	o	PIN, CONNECTOR (PC BOARD) 9P
CN22	1-766-703-11	s	CONNECTOR, COAXIAL
CN23	1-766-703-11	s	CONNECTOR, COAXIAL
CN24	1-766-703-11	s	CONNECTOR, COAXIAL
CN25	1-766-703-11	s	CONNECTOR, COAXIAL
CN26	1-766-703-11	s	CONNECTOR, COAXIAL

MB-693A BOARD

S/N 11001 and higher[for UC]
S/N 31001 and higher[for J]
S/N 41001 and higher[for CE]

Ref. No. or Q'ty	Part No.	SP	Description
1pc	A-8322-093-A		MOUNTED CIRCUIT BOARD, MB-693A
15pcs	3-719-381-21	s	SCREW (M2X6)
C1	1-104-852-11	s	TANTALUM, CHIP 22uF 20% 10V
C2	1-128-397-21	s	ELECT 100uF 20% 16V
CN6	1-573-768-21	o	PIN, CONNECTOR (1.5MM) (SMD)5P
CN7	1-764-177-11	o	PIN, CONNECTOR (SMD)(1.5MM) 7P
CN8	1-764-643-21	o	PIN, CONNECTOR (SMD) 11P
CN9	1-766-383-11	o	PIN, CONNECTOR (1.5MM)(SMD)12P
CN10	1-691-591-11	o	PIN, CONNECTOR (1.5MM) (SMD)8P
CN11	1-764-177-11	o	PIN, CONNECTOR (SMD)(1.5MM) 7P
CN12	1-766-382-11	o	PIN, CONNECTOR (1.5MM)(SMD)10P
CN13	1-573-806-21	s	PIN, CONNECTOR (1.5MM) (SMD)6P
CN14	1-764-177-11	o	PIN, CONNECTOR (SMD)(1.5MM) 7P
CN15	1-750-934-21	o	PIN, CONNECTOR 20P
CN16	1-766-376-11	o	PIN, CONNECTOR (1.5MM)(SMD) 9P
CN17	1-750-935-21	o	PIN, CONNECTOR 30P
CN18	1-573-290-21	s	PIN, CONNECTOR (1.5MM) (SMD)4P
CN19	1-764-511-11	o	PIN, CONNECTOR (PC BOARD) 9P
CN20	1-764-509-11	o	PIN, CONNECTOR (PC BOARD) 3P
CN21	1-764-511-11	o	PIN, CONNECTOR (PC BOARD) 9P
CN22	1-766-703-11	s	CONNECTOR, COAXIAL
CN23	1-766-703-11	s	CONNECTOR, COAXIAL
CN24	1-766-703-11	s	CONNECTOR, COAXIAL
CN25	1-766-703-11	s	CONNECTOR, COAXIAL
CN26	1-766-703-11	s	CONNECTOR, COAXIAL
CN28	1-564-002-11	s	CONNECTOR 3P, MALE
D1	8-719-104-34	s	DIODE 1S2835
IC3	8-759-927-46	s	IC SN74HC00ANS
L1	1-424-674-11	s	INDUCTOR 22uH
L3	1-412-030-11	s	INDUCTOR CHIP 22uH
R3	1-216-025-11	s	METAL, CHIP 100 5% 1/10W
R5	1-216-025-11	s	METAL, CHIP 100 5% 1/10W
R6	1-216-025-11	s	METAL, CHIP 100 5% 1/10W
R7	1-216-025-11	s	METAL, CHIP 100 5% 1/10W
R8	1-216-025-11	s	METAL, CHIP 100 5% 1/10W

YD-26 BOARD

Ref. No. or Q'ty	Part No.	SP	Description
1pc	A-8315-035-A	o	MOUNTED CIRCUIT BOARD, YD-26
1pc	2-251-622-01	o	LEVER, PC BOARD
1pc	7-682-903-01	s	SCREW +PWH 3X5
3pcs	3-719-381-21	s	SCREW (M2X6)
C1	1-163-038-00	s	CERAMIC, CHIP 0.1uF 25V
C2	1-104-851-11	s	TANTALUM, CHIP 10uF 20% 10V
C3	1-104-851-11	s	TANTALUM, CHIP 10uF 20% 10V
C4	1-163-038-00	s	CERAMIC, CHIP 0.1uF 25V
C5	1-163-038-00	s	CERAMIC, CHIP 0.1uF 25V
C6	1-163-038-00	s	CERAMIC, CHIP 0.1uF 25V
C7	1-163-275-11	s	CERAMIC, CHIP 0.001uF 5% 50V
C8	1-163-038-00	s	CERAMIC, CHIP 0.1uF 25V
C9	1-163-038-00	s	CERAMIC, CHIP 0.1uF 25V
C10	1-163-038-00	s	CERAMIC, CHIP 0.1uF 25V
C11	1-163-038-00	s	CERAMIC, CHIP 0.1uF 25V
C12	1-163-275-11	s	CERAMIC, CHIP 0.001uF 5% 50V
C13	1-163-038-00	s	CERAMIC, CHIP 0.1uF 25V
C14	1-163-038-00	s	CERAMIC, CHIP 0.1uF 25V
C15	1-163-038-00	s	CERAMIC, CHIP 0.1uF 25V
C16	1-163-038-00	s	CERAMIC, CHIP 0.1uF 25V
C17	1-163-275-11	s	CERAMIC, CHIP 0.001uF 5% 50V
C18	1-163-038-00	s	CERAMIC, CHIP 0.1uF 25V
C19	1-163-038-00	s	CERAMIC, CHIP 0.1uF 25V
C20	1-163-038-00	s	CERAMIC, CHIP 0.1uF 25V
C21	1-163-038-00	s	CERAMIC, CHIP 0.1uF 25V
C22	1-163-275-11	s	CERAMIC, CHIP 0.001uF 5% 50V
C23	1-163-038-00	s	CERAMIC, CHIP 0.1uF 25V
C24	1-163-038-00	s	CERAMIC, CHIP 0.1uF 25V
C25	1-163-038-00	s	CERAMIC, CHIP 0.1uF 25V
C26	1-163-038-00	s	CERAMIC, CHIP 0.1uF 25V
C27	1-163-038-00	s	CERAMIC, CHIP 0.1uF 25V
C28	1-163-038-00	s	CERAMIC, CHIP 0.1uF 25V
C29	1-163-038-00	s	CERAMIC, CHIP 0.1uF 25V
C30	1-163-038-00	s	CERAMIC, CHIP 0.1uF 25V
C31	1-163-038-00	s	CERAMIC, CHIP 0.1uF 25V
C32	1-163-038-00	s	CERAMIC, CHIP 0.1uF 25V
C33	1-163-038-00	s	CERAMIC, CHIP 0.1uF 25V
C34	1-163-038-00	s	CERAMIC, CHIP 0.1uF 25V
C35	1-163-038-00	s	CERAMIC, CHIP 0.1uF 25V
C36	1-163-038-00	s	CERAMIC, CHIP 0.1uF 25V
C37	1-104-852-11	s	TANTALUM, CHIP 22uF 20% 10V
C38	1-163-038-00	s	CERAMIC, CHIP 0.1uF 25V
C39	1-163-038-00	s	CERAMIC, CHIP 0.1uF 25V
C40	1-163-021-91	s	CERAMIC 0.01uF 10% 50V
C41	1-104-852-11	s	TANTALUM, CHIP 22uF 20% 10V
C42	1-104-851-11	s	TANTALUM, CHIP 10uF 20% 10V
C43	1-163-038-00	s	CERAMIC, CHIP 0.1uF 25V
C44	1-163-038-00	s	CERAMIC, CHIP 0.1uF 25V
C45	1-135-177-21	s	TANTALUM, CHIP 1uF 10% 25V
C46	1-135-177-21	s	TANTALUM, CHIP 1uF 10% 25V
C47	1-163-251-11	s	CERAMIC, CHIP 100PF 5% 50V
C48	1-163-038-00	s	CERAMIC, CHIP 0.1uF 25V
C49	1-104-851-11	s	TANTALUM, CHIP 10uF 20% 10V
C50	1-128-394-11	s	ELECT 220uF 20% 10V
C51	1-163-038-00	s	CERAMIC, CHIP 0.1uF 25V
C52	1-128-394-11	s	ELECT 220uF 20% 10V
C53	1-163-038-00	s	CERAMIC, CHIP 0.1uF 25V
C54	1-163-038-00	s	CERAMIC, CHIP 0.1uF 25V
C55	1-163-038-00	s	CERAMIC, CHIP 0.1uF 25V

(YD-26 BOARD)

Ref. No. or Q'ty	Part No.	SP	Description
C56	1-163-275-11	s	CERAMIC, CHIP 0.001uF 5% 50V
C57	1-163-038-00	s	CERAMIC, CHIP 0.1uF 25V
C58	1-163-217-11	s	CERAMIC, CHIP 1PF 50V
C59	1-163-038-00	s	CERAMIC, CHIP 0.1uF 25V
C60	1-163-038-00	s	CERAMIC, CHIP 0.1uF 25V
C61	1-163-038-00	s	CERAMIC, CHIP 0.1uF 25V
C62	1-163-038-00	s	CERAMIC, CHIP 0.1uF 25V
C63	1-163-275-11	s	CERAMIC, CHIP 0.001uF 5% 50V
C64	1-163-038-00	s	CERAMIC, CHIP 0.1uF 25V
C65	1-163-217-11	s	CERAMIC, CHIP 1PF 50V
C66	1-163-038-00	s	CERAMIC, CHIP 0.1uF 25V
C67	1-163-038-00	s	CERAMIC, CHIP 0.1uF 25V
C68	1-163-038-00	s	CERAMIC, CHIP 0.1uF 25V
C69	1-163-038-00	s	CERAMIC, CHIP 0.1uF 25V
C70	1-163-275-11	s	CERAMIC, CHIP 0.001uF 5% 50V
C71	1-163-038-00	s	CERAMIC, CHIP 0.1uF 25V
C72	1-163-038-00	s	CERAMIC, CHIP 0.1uF 25V
C73	1-163-217-11	s	CERAMIC, CHIP 1PF 50V
C74	1-163-038-00	s	CERAMIC, CHIP 0.1uF 25V
C75	1-163-038-00	s	CERAMIC, CHIP 0.1uF 25V
C76	1-163-038-00	s	CERAMIC, CHIP 0.1uF 25V
C77	1-163-275-11	s	CERAMIC, CHIP 0.001uF 5% 50V
C78	1-163-038-00	s	CERAMIC, CHIP 0.1uF 25V
C79	1-163-038-00	s	CERAMIC, CHIP 0.1uF 25V
C80	1-163-217-11	s	CERAMIC, CHIP 1PF 50V
C81	1-163-038-00	s	CERAMIC, CHIP 0.1uF 25V
C82	1-163-038-00	s	CERAMIC, CHIP 0.1uF 25V
C83	1-163-038-00	s	CERAMIC, CHIP 0.1uF 25V
C84	1-163-038-00	s	CERAMIC, CHIP 0.1uF 25V
C85	1-163-038-00	s	CERAMIC, CHIP 0.1uF 25V
C86	1-163-038-00	s	CERAMIC, CHIP 0.1uF 25V
C87	1-163-275-11	s	CERAMIC, CHIP 0.001uF 5% 50V
C88	1-163-038-00	s	CERAMIC, CHIP 0.1uF 25V
C89	1-163-217-11	s	CERAMIC, CHIP 1PF 50V
C90	1-163-038-00	s	CERAMIC, CHIP 0.1uF 25V
C91	1-163-038-00	s	CERAMIC, CHIP 0.1uF 25V
C92	1-163-038-00	s	CERAMIC, CHIP 0.1uF 25V
C93	1-163-038-00	s	CERAMIC, CHIP 0.1uF 25V
C94	1-163-038-00	s	CERAMIC, CHIP 0.1uF 25V
C95	1-163-038-00	s	CERAMIC, CHIP 0.1uF 25V
C120	1-163-038-00	s	CERAMIC, CHIP 0.1uF 25V
C121	1-163-038-00	s	CERAMIC, CHIP 0.1uF 25V
C122	1-163-038-00	s	CERAMIC, CHIP 0.1uF 25V
C123	1-163-275-11	s	CERAMIC, CHIP 0.001uF 5% 50V
C124	1-163-038-00	s	CERAMIC, CHIP 0.1uF 25V
C125	1-163-038-00	s	CERAMIC, CHIP 0.1uF 25V
C126	1-163-038-00	s	CERAMIC, CHIP 0.1uF 25V
C127	1-163-275-11	s	CERAMIC, CHIP 0.001uF 5% 50V
C128	1-104-851-11	s	TANTALUM, CHIP 10uF 20% 10V
C129	1-135-179-21	s	TANTALUM, CHIP 2.2uF 10% 16V
C130	1-135-179-21	s	TANTALUM, CHIP 2.2uF 10% 16V
C131	1-163-038-00	s	CERAMIC, CHIP 0.1uF 25V
C132	1-163-038-00	s	CERAMIC, CHIP 0.1uF 25V
C133	1-104-851-11	s	TANTALUM, CHIP 10uF 20% 10V
C134	1-163-038-00	s	CERAMIC, CHIP 0.1uF 25V
C135	1-163-021-91	s	CERAMIC 0.01uF 10% 50V
C136	1-163-243-11	s	CERAMIC, CHIP 47PF 5% 50V
C137	1-163-021-91	s	CERAMIC 0.01uF 10% 50V
C138	1-126-603-11	s	ELECT 4.7uF 20% 35V

(YD-26 BOARD)

Ref. No. or Q'ty	Part No.	SP	Description
C139	1-163-121-00	s	CERAMIC, CHIP 150PF 5% 50V
C140	1-135-149-21	s	TANTALUM, CHIP 2.2uF 10% 10V
C141	1-163-038-00	s	CERAMIC, CHIP 0.1uF 25V
C142	1-104-851-11	s	TANTALUM, CHIP 10uF 20% 10V
C143	1-163-125-00	s	CERAMIC, CHIP 220PF 5% 50V
C144	1-163-021-91	s	CERAMIC 0.01uF 10% 50V
C145	1-104-852-11	s	TANTALUM, CHIP 22uF 20% 10V
C146	1-104-852-11	s	TANTALUM, CHIP 22uF 20% 10V
C147	1-163-021-91	s	CERAMIC 0.01uF 10% 50V
C148	1-163-125-00	s	CERAMIC, CHIP 220PF 5% 50V
C149	1-163-021-91	s	CERAMIC 0.01uF 10% 50V
C150	1-163-021-91	s	CERAMIC 0.01uF 10% 50V
C151	1-163-038-00	s	CERAMIC, CHIP 0.1uF 25V
C152	1-163-021-91	s	CERAMIC 0.01uF 10% 50V
C153	1-163-021-91	s	CERAMIC 0.01uF 10% 50V
C154	1-163-038-00	s	CERAMIC, CHIP 0.1uF 25V
C155	1-163-038-00	s	CERAMIC, CHIP 0.1uF 25V
C156	1-104-851-11	s	TANTALUM, CHIP 10uF 20% 10V
C157	1-104-852-11	s	TANTALUM, CHIP 22uF 20% 10V
C158	1-104-852-11	s	TANTALUM, CHIP 22uF 20% 10V
C159	1-163-021-91	s	CERAMIC 0.01uF 10% 50V
C160	1-163-021-91	s	CERAMIC 0.01uF 10% 50V
C161	1-135-148-21	s	TANTALUM, CHIP 1.5uF 10% 16V
C162	1-163-275-11	s	CERAMIC, CHIP 0.001uF 5% 50V
C163	1-135-148-21	s	TANTALUM, CHIP 1.5uF 10% 16V
C164	1-163-038-00	s	CERAMIC, CHIP 0.1uF 25V
C165	1-163-038-00	s	CERAMIC, CHIP 0.1uF 25V
C166	1-163-038-00	s	CERAMIC, CHIP 0.1uF 25V
C167	1-163-038-00	s	CERAMIC, CHIP 0.1uF 25V
C169	1-163-021-91	s	CERAMIC 0.01uF 10% 50V
C170	1-163-038-00	s	CERAMIC, CHIP 0.1uF 25V
C171	1-163-021-91	s	CERAMIC 0.01uF 10% 50V
C172	1-163-021-91	s	CERAMIC 0.01uF 10% 50V
C173	1-163-038-00	s	CERAMIC, CHIP 0.1uF 25V
C174	1-163-038-00	s	CERAMIC, CHIP 0.1uF 25V
C175	1-163-038-00	s	CERAMIC, CHIP 0.1uF 25V
C176	1-104-851-11	s	TANTALUM, CHIP 10uF 20% 10V
C177	1-104-852-11	s	TANTALUM, CHIP 22uF 20% 10V
C178	1-104-852-11	s	TANTALUM, CHIP 22uF 20% 10V
C179	1-163-021-91	s	CERAMIC 0.01uF 10% 50V
C180	1-163-222-11	s	CERAMIC, CHIP 5PF 0.5PF 50V
C181	1-163-021-91	s	CERAMIC 0.01uF 10% 50V
C182	1-126-603-11	s	ELECT 4.7uF 20% 35V
C183	1-104-851-11	s	TANTALUM, CHIP 10uF 20% 10V
C184	1-104-851-11	s	TANTALUM, CHIP 10uF 20% 10V
C188	1-104-851-11	s	TANTALUM, CHIP 10uF 20% 10V
C189	1-104-851-11	s	TANTALUM, CHIP 10uF 20% 10V
C190	1-104-851-11	s	TANTALUM, CHIP 10uF 20% 10V
C191	1-163-038-00	s	CERAMIC, CHIP 0.1uF 25V
C192	1-104-851-11	s	TANTALUM, CHIP 10uF 20% 10V
C193	1-163-038-00	s	CERAMIC, CHIP 0.1uF 25V
C194	1-163-235-11	s	CERAMIC, CHIP 22PF 5% 50V
C195	1-163-237-11	s	CERAMIC, CHIP 27PF 5% 50V
C196	1-163-235-11	s	CERAMIC, CHIP 22PF 5% 50V
C197	1-163-235-11	s	CERAMIC, CHIP 22PF 5% 50V
C200	1-104-852-11	s	TANTALUM, CHIP 22uF 20% 10V
C201	1-104-852-11	s	TANTALUM, CHIP 22uF 20% 10V
C202	1-163-021-91	s	CERAMIC 0.01uF 10% 50V
C203	1-163-021-91	s	CERAMIC 0.01uF 10% 50V

(YD-26 BOARD)

Ref. No. or Q'ty	Part No.	SP	Description
C204	1-163-021-91	s	CERAMIC 0.01uF 10% 50V
C205	1-163-275-11	s	CERAMIC, CHIP 0.001uF 5% 50V
C206	1-163-038-00	s	CERAMIC, CHIP 0.1uF 25V
C207	1-163-275-11	s	CERAMIC, CHIP 0.001uF 5% 50V
C208	1-163-038-00	s	CERAMIC, CHIP 0.1uF 25V
C209	1-163-275-11	s	CERAMIC, CHIP 0.001uF 5% 50V
C210	1-107-689-21	s	TANTALUM, CHIP 1uF 20% 35V
C211	1-135-179-21	s	TANTALUM, CHIP 2.2uF 10% 16V
C212	1-135-179-21	s	TANTALUM, CHIP 2.2uF 10% 16V
C213	1-163-038-00	s	CERAMIC, CHIP 0.1uF 25V
C214	1-163-038-00	s	CERAMIC, CHIP 0.1uF 25V
C215	1-163-021-91	s	CERAMIC 0.01uF 10% 50V
C216	1-163-038-00	s	CERAMIC, CHIP 0.1uF 25V
C217	1-163-021-91	s	CERAMIC 0.01uF 10% 50V
C218	1-163-021-91	s	CERAMIC 0.01uF 10% 50V
C219	1-163-038-00	s	CERAMIC, CHIP 0.1uF 25V
C220	1-163-021-91	s	CERAMIC 0.01uF 10% 50V
C221	1-104-851-11	s	TANTALUM, CHIP 10uF 20% 10V
C222	1-104-851-11	s	TANTALUM, CHIP 10uF 20% 10V
C223	1-104-851-11	s	TANTALUM, CHIP 10uF 20% 10V
C224	1-104-851-11	s	TANTALUM, CHIP 10uF 20% 10V
C225	1-104-851-11	s	TANTALUM, CHIP 10uF 20% 10V
C226	1-163-021-91	s	CERAMIC 0.01uF 10% 50V
C227	1-163-021-91	s	CERAMIC 0.01uF 10% 50V
C228	1-163-217-11	s	CERAMIC, CHIP 1PF 50V
C229	1-163-220-11	s	CERAMIC, CHIP 3PF 50V
C230	1-104-852-11	s	TANTALUM, CHIP 22uF 20% 10V
C231	1-104-852-11	s	TANTALUM, CHIP 22uF 20% 10V
C232	1-163-275-11	s	CERAMIC, CHIP 0.001uF 5% 50V
C233	1-126-603-11	s	ELECT 4.7uF 20% 35V
C234	1-163-275-11	s	CERAMIC, CHIP 0.001uF 5% 50V
C235	1-104-852-11	s	TANTALUM, CHIP 22uF 20% 10V
C236	1-104-852-11	s	TANTALUM, CHIP 22uF 20% 10V
C237	1-163-021-91	s	CERAMIC 0.01uF 10% 50V
C238	1-163-021-91	s	CERAMIC 0.01uF 10% 50V
C239	1-163-038-00	s	CERAMIC, CHIP 0.1uF 25V
C240	1-163-038-00	s	CERAMIC, CHIP 0.1uF 25V
C242	1-163-038-00	s	CERAMIC, CHIP 0.1uF 25V
C243	1-163-021-91	s	CERAMIC 0.01uF 10% 50V
C244	1-163-021-91	s	CERAMIC 0.01uF 10% 50V
C245	1-163-038-00	s	CERAMIC, CHIP 0.1uF 25V
C246	1-163-021-91	s	CERAMIC 0.01uF 10% 50V
C247	1-104-851-11	s	TANTALUM, CHIP 10uF 20% 10V
C249	1-104-851-11	s	TANTALUM, CHIP 10uF 20% 10V
C250	1-104-851-11	s	TANTALUM, CHIP 10uF 20% 10V
C251	1-135-177-21	s	TANTALUM, CHIP 1uF 10% 25V
C252	1-135-177-21	s	TANTALUM, CHIP 1uF 10% 25V
C253	1-163-021-91	s	CERAMIC 0.01uF 10% 50V
C254	1-163-021-91	s	CERAMIC 0.01uF 10% 50V
C255	1-163-217-11	s	CERAMIC, CHIP 1PF 50V
C256	1-163-220-11	s	CERAMIC, CHIP 3PF 50V
C257	1-104-852-11	s	TANTALUM, CHIP 22uF 20% 10V
C258	1-104-852-11	s	TANTALUM, CHIP 22uF 20% 10V
C259	1-163-021-91	s	CERAMIC 0.01uF 10% 50V
C260	1-126-603-11	s	ELECT 4.7uF 20% 35V
C261	1-163-021-91	s	CERAMIC 0.01uF 10% 50V
C262	1-104-851-11	s	TANTALUM, CHIP 10uF 20% 10V
C263	1-104-851-11	s	TANTALUM, CHIP 10uF 20% 10V
C264	1-163-021-91	s	CERAMIC 0.01uF 10% 50V

(YD-26 BOARD)

Ref. No. or Q'ty	Part No.	SP	Description
C265	1-163-021-91	s	CERAMIC 0.01uF 10% 50V
C266	1-163-233-11	s	CERAMIC 18PF 5% 50V
C267	1-163-021-91	s	CERAMIC 0.01uF 10% 50V
C268	1-163-038-00	s	CERAMIC, CHIP 0.1uF 25V
C269	1-163-038-00	s	CERAMIC, CHIP 0.1uF 25V
C273	1-104-851-11	s	TANTALUM, CHIP 10uF 20% 10V
C274	1-104-851-11	s	TANTALUM, CHIP 10uF 20% 10V
C275	1-163-038-00	s	CERAMIC, CHIP 0.1uF 25V
C276	1-163-038-00	s	CERAMIC, CHIP 0.1uF 25V
C277	1-104-851-11	s	TANTALUM, CHIP 10uF 20% 10V
C278	1-104-851-11	s	TANTALUM, CHIP 10uF 20% 10V
C279	1-163-038-00	s	CERAMIC, CHIP 0.1uF 25V
C383	1-128-397-21	s	ELECT 100uF 20% 16V
C385	1-128-394-11	s	ELECT 220uF 20% 10V
C386	1-128-394-11	s	ELECT 220uF 20% 10V
C387	1-163-021-91	s	CERAMIC 0.01uF 10% 50V
C388	1-163-021-91	s	CERAMIC 0.01uF 10% 50V
C389	1-135-149-21	s	TANTALUM, CHIP 2.2uF 10% 10V
C391	1-163-275-11	s	CERAMIC, CHIP 0.001uF 5% 50V
C392	1-128-394-11	s	ELECT 220uF 20% 10V
C393	1-128-394-11	s	ELECT 220uF 20% 10V
C401	1-163-038-00	s	CERAMIC, CHIP 0.1uF 25V
C403	1-163-038-00	s	CERAMIC, CHIP 0.1uF 25V
C415	1-163-038-00	s	CERAMIC, CHIP 0.1uF 25V
C453	1-163-038-00	s	CERAMIC, CHIP 0.1uF 25V
C457	1-163-038-00	s	CERAMIC, CHIP 0.1uF 25V
C460	1-163-038-00	s	CERAMIC, CHIP 0.1uF 25V
C464	1-163-038-00	s	CERAMIC, CHIP 0.1uF 25V
C469	1-163-038-00	s	CERAMIC, CHIP 0.1uF 25V
C473	1-163-038-00	s	CERAMIC, CHIP 0.1uF 25V
C474	1-163-038-00	s	CERAMIC, CHIP 0.1uF 25V
C476	1-163-038-00	s	CERAMIC, CHIP 0.1uF 25V
C479	1-163-038-00	s	CERAMIC, CHIP 0.1uF 25V
C480	1-163-038-00	s	CERAMIC, CHIP 0.1uF 25V
C482	1-163-038-00	s	CERAMIC, CHIP 0.1uF 25V
C484	1-163-038-00	s	CERAMIC, CHIP 0.1uF 25V
C486	1-163-038-00	s	CERAMIC, CHIP 0.1uF 25V
C487	1-163-038-00	s	CERAMIC, CHIP 0.1uF 25V
C489	1-163-038-00	s	CERAMIC, CHIP 0.1uF 25V
C492	1-163-038-00	s	CERAMIC, CHIP 0.1uF 25V
C493	1-163-038-00	s	CERAMIC, CHIP 0.1uF 25V
C497	1-163-038-00	s	CERAMIC, CHIP 0.1uF 25V
C498	1-163-038-00	s	CERAMIC, CHIP 0.1uF 25V
C500	1-163-038-00	s	CERAMIC, CHIP 0.1uF 25V
C511	1-163-217-11	s	CERAMIC, CHIP 1PF 50V
C512	1-163-085-00	s	CERAMIC, CHIP 2PF 50V
C513	1-163-021-91	s	CERAMIC 0.01uF 10% 50V
C514	1-104-601-11	s	ELECT 10uF 20% 10V
C515	1-163-021-91	s	CERAMIC 0.01uF 10% 50V
C516	1-163-038-00	s	CERAMIC, CHIP 0.1uF 25V
C517	1-163-233-11	s	CERAMIC 18PF 5% 50V
C518	1-163-091-00	s	CERAMIC, CHIP 8PF 0.25PF 50V
C519	1-163-224-11	s	CERAMIC, CHIP 7PF 0.5PF 50V
C524	1-163-113-00	s	CERAMIC, CHIP 68PF 5% 50V
C525	1-104-851-11	s	TANTALUM, CHIP 10uF 20% 10V
C526	1-135-148-21	s	TANTALUM, CHIP 1.5uF 10% 16V
C527	1-135-148-21	s	TANTALUM, CHIP 1.5uF 10% 16V
CN2	1-766-703-11	s	CONNECTOR, COAXIAL

(YD-26 BOARD)

Ref. No. or Q'ty	Part No.	SP	Description
CN3	1-766-703-11	s	CONNECTOR, COAXIAL
D1	8-719-820-23	s	DIODE 1SS269
D2	8-719-820-23	s	DIODE 1SS269
D3	8-719-820-23	s	DIODE 1SS269
D4	8-719-820-23	s	DIODE 1SS269
D5	8-719-820-23	s	DIODE 1SS269
D6	8-719-820-23	s	DIODE 1SS269
D7	8-719-820-23	s	DIODE 1SS269
D8	8-719-820-23	s	DIODE 1SS269
D9	8-719-820-23	s	DIODE 1SS269
D10	8-719-820-23	s	DIODE 1SS269
D11	8-719-820-23	s	DIODE 1SS269
D12	8-719-820-23	s	DIODE 1SS269
D13	8-719-800-76	s	DIODE 1SS226
D14	8-719-948-48	s	DIODE HSM88AS-TL
D15	8-719-948-48	s	DIODE HSM88AS-TL
D16	8-719-800-76	s	DIODE 1SS226
D17	8-719-800-76	s	DIODE 1SS226
D18	8-719-820-23	s	DIODE 1SS269
D19	8-719-820-23	s	DIODE 1SS269
D20	8-719-820-23	s	DIODE 1SS269
D21	8-719-820-23	s	DIODE 1SS269
D22	8-719-820-23	s	DIODE 1SS269
D23	8-719-820-23	s	DIODE 1SS269
D24	8-719-820-23	s	DIODE 1SS269
D25	8-719-820-23	s	DIODE 1SS269
D26	8-719-820-23	s	DIODE 1SS269
D27	8-719-820-23	s	DIODE 1SS269
D28	8-719-820-23	s	DIODE 1SS269
D29	8-719-820-23	s	DIODE 1SS269
D30	8-719-820-23	s	DIODE 1SS269
D40	8-719-030-22	s	DIODE 1SV172
D41	8-719-030-22	s	DIODE 1SV172
D42	8-719-800-76	s	DIODE 1SS226
D43	8-719-800-76	s	DIODE 1SS226
D50	8-719-030-22	s	DIODE 1SV172
D51	8-719-030-22	s	DIODE 1SV172
D52	8-719-800-76	s	DIODE 1SS226
D53	8-719-800-76	s	DIODE 1SS226
D54	8-719-030-22	s	DIODE 1SV172
D66	8-719-800-13	s	DIODE TLUR163
D68	8-719-800-13	s	DIODE TLUR163
D69	8-719-800-13	s	DIODE TLUR163
D70	8-719-157-23	s	DIODE RD4.7M-B
D71	8-719-157-23	s	DIODE RD4.7M-B
D72	8-759-274-67	s	IC LM4040BIM3X-5.0
DL1	1-415-832-11	s	DELAY LINE
FL1	1-239-948-11	s	FILTER, LOW-PASS (VIDEO)
FL2	1-239-944-11	s	FILTER, LOW-PASS
FL3	1-409-821-11	s	PHASE SHIFTER 90
FL4	1-239-950-11	s	FILTER, LOW-PASS (VIDEO)
FL5	1-239-951-11	s	FILTER, LOW-PASS (VIDEO)
FL6	1-239-946-11	s	FILTER, LOW-PASS
FL7	1-239-951-11	s	FILTER, LOW-PASS (VIDEO)
FL12	1-239-964-11	s	FILTER (CABLE EQ)
FL13	1-239-965-11	s	FILTER (CABLE EQ)
FL14	1-239-966-11	s	FILTER (CABLE EQ)

(YD-26 BOARD)

Ref. No. or Q'ty	Part No.	SP	Description
FL15	1-239-967-11	s	FILTER (CABLE EQ)
IC1	8-759-906-53	s	IC TL062CPS
IC2	8-759-009-07	s	IC MC14053BF
IC3	8-759-100-93	s	IC UPC393G2
IC4	8-759-008-74	s	IC MC14001BF
IC5	8-759-009-41	s	IC MC14520BF
IC6	8-759-008-79	s	IC MC14011BF
IC7	8-759-011-65	s	IC MC74HC4053F
IC8	8-759-008-74	s	IC MC14001BF
IC9	8-759-008-79	s	IC MC14011BF
IC10	8-759-011-65	s	IC MC74HC4053F
IC11	8-759-011-65	s	IC MC74HC4053F
IC12	8-759-906-53	s	IC TL062CPS
IC13	8-759-176-91	s	IC M51348AFP
IC14	8-759-987-27	s	IC LM1881M
IC15	8-759-239-58	s	IC TC74HC221AF
IC16	8-759-239-58	s	IC TC74HC221AF
IC17	8-759-100-93	s	IC UPC393G2
IC18	8-759-700-95	s	IC NJM1496M
IC19	8-759-906-53	s	IC TL062CPS
IC20	8-759-141-60	s	IC UPA101G
IC21	8-759-054-61	s	IC CLC505AJE
IC23	8-759-421-87	s	IC UPC319G2-E2
IC24	8-759-906-53	s	IC TL062CPS
IC25	8-759-141-60	s	IC UPA101G
IC26	8-759-054-61	s	IC CLC505AJE
IC27	8-759-511-14	s	IC TLC274CNS
IC29	8-759-141-60	s	IC UPA101G
IC30	8-759-054-61	s	IC CLC505AJE
IC31	8-759-511-14	s	IC TLC274CNS
IC42	8-759-906-53	s	IC TL062CPS
IC47	8-759-970-59	s	IC TLC272CPS
IC52	8-759-236-19	s	IC TC74HC151AF(EL)
IC53	8-759-054-61	s	IC CLC505AJE
IC54	8-759-054-61	s	IC CLC505AJE
IC55	8-759-054-61	s	IC CLC505AJE
IC56	8-759-054-61	s	IC CLC505AJE
IC57	8-759-054-61	s	IC CLC505AJE
IC58	8-752-052-82	s	IC CXA1432M
IC61	8-759-008-74	s	IC MC14001BF
IC62	8-759-233-44	s	IC TC74HC595AF
L1	1-412-029-11	s	INDUCTOR, CHIP 10uH
L2	1-412-029-11	s	INDUCTOR, CHIP 10uH
L3	1-408-777-00	s	INDUCTOR, CHIP10uH
L4	1-408-777-00	s	INDUCTOR, CHIP10uH
L5	1-408-777-00	s	INDUCTOR, CHIP10uH
L6	1-408-777-00	s	INDUCTOR, CHIP10uH
L7	1-408-777-00	s	INDUCTOR, CHIP10uH
L8	1-408-777-00	s	INDUCTOR, CHIP10uH
L9	1-408-777-00	s	INDUCTOR, CHIP10uH
L10	1-412-029-11	s	INDUCTOR, CHIP 10uH
L11	1-412-029-11	s	INDUCTOR, CHIP 10uH
L12	1-412-029-11	s	INDUCTOR, CHIP 10uH
L13	1-412-029-11	s	INDUCTOR, CHIP 10uH
L14	1-408-777-00	s	INDUCTOR, CHIP10uH
L15	1-408-777-00	s	INDUCTOR, CHIP10uH
L16	1-408-777-00	s	INDUCTOR, CHIP10uH
L17	1-408-777-00	s	INDUCTOR, CHIP10uH

(YD-26 BOARD)

Ref. No. or Q'ty	Part No.	SP	Description
L18	1-408-777-00	s	INDUCTOR, CHIP10uH
L19	1-408-777-00	s	INDUCTOR, CHIP10uH
L20	1-408-777-00	s	INDUCTOR, CHIP10uH
L30	1-412-029-11	s	INDUCTOR, CHIP 10uH
L31	1-408-777-00	s	INDUCTOR, CHIP10uH
L32	1-408-777-00	s	INDUCTOR, CHIP10uH
L33	1-408-777-00	s	INDUCTOR, CHIP10uH
L34	1-412-029-11	s	INDUCTOR, CHIP 10uH
L37	1-412-029-11	s	INDUCTOR, CHIP 10uH
L38	1-412-029-11	s	INDUCTOR, CHIP 10uH
L39	1-412-029-11	s	INDUCTOR, CHIP 10uH
L40	1-412-029-11	s	INDUCTOR, CHIP 10uH
L41	1-412-029-11	s	INDUCTOR, CHIP 10uH
L42	1-412-029-11	s	INDUCTOR, CHIP 10uH
L43	1-412-029-11	s	INDUCTOR, CHIP 10uH
L44	1-412-029-11	s	INDUCTOR, CHIP 10uH
L50	1-412-029-11	s	INDUCTOR, CHIP 10uH
L51	1-412-029-11	s	INDUCTOR, CHIP 10uH
L52	1-408-777-00	s	INDUCTOR, CHIP10uH
L53	1-408-777-00	s	INDUCTOR, CHIP10uH
L54	1-408-777-00	s	INDUCTOR, CHIP10uH
L55	1-412-029-11	s	INDUCTOR, CHIP 10uH
L56	1-412-029-11	s	INDUCTOR, CHIP 10uH
L57	1-412-029-11	s	INDUCTOR, CHIP 10uH
L58	1-412-029-11	s	INDUCTOR, CHIP 10uH
L59	1-408-777-00	s	INDUCTOR, CHIP10uH
L60	1-408-765-21	s	INDUCTOR, CHIP 1uH
L61	1-408-777-00	s	INDUCTOR, CHIP10uH
L62	1-412-029-11	s	INDUCTOR, CHIP 10uH
L95	1-410-948-11	s	INDUCTOR 100uH
L96	1-410-948-11	s	INDUCTOR 100uH
LV1	1-410-301-11	s	MICRO INDUCTOR 1uH
Q1	8-729-031-37	s	TRANSISTOR 2SC3837KT146Q
Q2	8-729-216-22	s	TRANSISTOR 2SA1162
Q3	8-729-031-37	s	TRANSISTOR 2SC3837KT146Q
Q4	8-729-031-37	s	TRANSISTOR 2SC3837KT146Q
Q5	8-729-216-22	s	TRANSISTOR 2SA1162
Q6	8-729-031-37	s	TRANSISTOR 2SC3837KT146Q
Q7	8-729-031-37	s	TRANSISTOR 2SC3837KT146Q
Q8	8-729-216-22	s	TRANSISTOR 2SA1162
Q9	8-729-031-37	s	TRANSISTOR 2SC3837KT146Q
Q10	8-729-031-37	s	TRANSISTOR 2SC3837KT146Q
Q11	8-729-216-22	s	TRANSISTOR 2SA1162
Q12	8-729-031-37	s	TRANSISTOR 2SC3837KT146Q
Q13	8-729-031-37	s	TRANSISTOR 2SC3837KT146Q
Q14	8-729-216-22	s	TRANSISTOR 2SA1162
Q15	8-729-031-37	s	TRANSISTOR 2SC3837KT146Q
Q16	8-729-031-37	s	TRANSISTOR 2SC3837KT146Q
Q17	8-729-122-63	s	TRANSISTOR 2SA1226
Q18	8-729-120-28	s	TRANSISTOR 2SC1623-L5L6
Q19	8-729-031-37	s	TRANSISTOR 2SC3837KT146Q
Q20	8-729-216-22	s	TRANSISTOR 2SA1162
Q21	8-729-031-37	s	TRANSISTOR 2SC3837KT146Q
Q22	8-729-031-37	s	TRANSISTOR 2SC3837KT146Q
Q23	8-729-031-37	s	TRANSISTOR 2SC3837KT146Q
Q24	8-729-216-22	s	TRANSISTOR 2SA1162
Q25	8-729-031-37	s	TRANSISTOR 2SC3837KT146Q

(YD-26 BOARD)

Ref. No. or Q'ty	Part No.	SP	Description
Q26	8-729-031-37	s	TRANSISTOR 2SC3837KT146Q
Q27	8-729-031-37	s	TRANSISTOR 2SC3837KT146Q
Q28	8-729-216-22	s	TRANSISTOR 2SA1162
Q29	8-729-031-37	s	TRANSISTOR 2SC3837KT146Q
Q30	8-729-031-37	s	TRANSISTOR 2SC3837KT146Q
Q31	8-729-031-37	s	TRANSISTOR 2SC3837KT146Q
Q32	8-729-216-22	s	TRANSISTOR 2SA1162
Q33	8-729-031-37	s	TRANSISTOR 2SC3837KT146Q
Q34	8-729-031-37	s	TRANSISTOR 2SC3837KT146Q
Q35	8-729-031-37	s	TRANSISTOR 2SC3837KT146Q
Q36	8-729-216-22	s	TRANSISTOR 2SA1162
Q37	8-729-031-37	s	TRANSISTOR 2SC3837KT146Q
Q38	8-729-031-37	s	TRANSISTOR 2SC3837KT146Q
Q39	8-729-031-37	s	TRANSISTOR 2SC3837KT146Q
Q50	8-729-031-37	s	TRANSISTOR 2SC3837KT146Q
Q51	8-729-031-37	s	TRANSISTOR 2SC3837KT146Q
Q52	8-729-120-28	s	TRANSISTOR 2SC1623-L5L6
Q53	8-729-122-63	s	TRANSISTOR 2SA1226
Q54	8-729-122-63	s	TRANSISTOR 2SA1226
Q55	8-729-122-63	s	TRANSISTOR 2SA1226
Q56	8-729-122-63	s	TRANSISTOR 2SA1226
Q57	8-729-122-63	s	TRANSISTOR 2SA1226
Q58	8-729-122-63	s	TRANSISTOR 2SA1226
Q60	8-729-109-44	s	TRANSISTOR 2SK94
Q61	8-729-109-44	s	TRANSISTOR 2SK94
Q62	8-729-120-28	s	TRANSISTOR 2SC1623-L5L6
Q63	8-729-120-28	s	TRANSISTOR 2SC1623-L5L6
Q64	8-729-120-28	s	TRANSISTOR 2SC1623-L5L6
Q65	8-729-200-87	s	TRANSISTOR 2SC2714Y
Q66	8-729-122-63	s	TRANSISTOR 2SA1226
Q67	8-729-031-37	s	TRANSISTOR 2SC3837KT146Q
Q68	8-729-116-64	s	TRANSISTOR 2SK508-K51
Q69	8-729-116-64	s	TRANSISTOR 2SK508-K51
Q71	8-729-120-28	s	TRANSISTOR 2SC1623-L5L6
Q72	8-729-216-22	s	TRANSISTOR 2SA1162
Q73	8-729-120-28	s	TRANSISTOR 2SC1623-L5L6
Q74	8-729-216-22	s	TRANSISTOR 2SA1162
Q80	8-729-031-37	s	TRANSISTOR 2SC3837KT146Q
Q81	8-729-031-37	s	TRANSISTOR 2SC3837KT146Q
Q82	8-729-031-37	s	TRANSISTOR 2SC3837KT146Q
Q83	8-729-031-37	s	TRANSISTOR 2SC3837KT146Q
Q84	8-729-031-37	s	TRANSISTOR 2SC3837KT146Q
Q85	8-729-120-28	s	TRANSISTOR 2SC1623-L5L6
Q86	8-729-031-37	s	TRANSISTOR 2SC3837KT146Q
Q87	8-729-122-63	s	TRANSISTOR 2SA1226
Q88	8-729-120-28	s	TRANSISTOR 2SC1623-L5L6
Q89	8-729-200-87	s	TRANSISTOR 2SC2714Y
Q90	8-729-122-63	s	TRANSISTOR 2SA1226
Q91	8-729-109-44	s	TRANSISTOR 2SK94
Q92	8-729-116-64	s	TRANSISTOR 2SK508-K51
Q93	8-729-116-64	s	TRANSISTOR 2SK508-K51
Q94	8-729-120-28	s	TRANSISTOR 2SC1623-L5L6
Q95	8-729-120-28	s	TRANSISTOR 2SC1623-L5L6
Q96	8-729-122-63	s	TRANSISTOR 2SA1226
Q97	8-729-120-28	s	TRANSISTOR 2SC1623-L5L6
Q98	8-729-200-87	s	TRANSISTOR 2SC2714Y
Q99	8-729-116-64	s	TRANSISTOR 2SK508-K51
Q100	8-729-200-87	s	TRANSISTOR 2SC2714Y
Q101	8-729-122-63	s	TRANSISTOR 2SA1226

(YD-26 BOARD)

Ref. No. or Q'ty	Part No.	SP	Description
Q102	8-729-109-44	s	TRANSISTOR 2SK94
Q103	8-729-116-64	s	TRANSISTOR 2SK508-K51
Q104	8-729-116-64	s	TRANSISTOR 2SK508-K51
Q105	8-729-112-65	s	TRANSISTOR 2SA1462
Q106	8-729-031-37	s	TRANSISTOR 2SC3837KT146Q
Q145	8-729-101-07	s	TRANSISTOR 2SB798
Q146	8-729-807-51	s	TRANSISTOR 2SD1623-S
Q170	8-729-031-37	s	TRANSISTOR 2SC3837KT146Q
Q171	8-729-031-37	s	TRANSISTOR 2SC3837KT146Q
Q172	8-729-031-37	s	TRANSISTOR 2SC3837KT146Q
Q173	8-729-031-37	s	TRANSISTOR 2SC3837KT146Q
Q174	8-729-031-37	s	TRANSISTOR 2SC3837KT146Q
Q175	8-729-031-37	s	TRANSISTOR 2SC3837KT146Q
Q176	8-729-031-37	s	TRANSISTOR 2SC3837KT146Q
Q177	8-729-031-37	s	TRANSISTOR 2SC3837KT146Q
Q178	8-729-031-37	s	TRANSISTOR 2SC3837KT146Q
Q179	8-729-031-37	s	TRANSISTOR 2SC3837KT146Q
Q180	8-729-122-63	s	TRANSISTOR 2SA1226
Q181	8-729-122-63	s	TRANSISTOR 2SA1226
Q182	8-729-120-28	s	TRANSISTOR 2SC1623-L5L6
Q183	8-729-120-28	s	TRANSISTOR 2SC1623-L5L6
Q184	8-729-120-28	s	TRANSISTOR 2SC1623-L5L6
Q185	8-729-122-63	s	TRANSISTOR 2SA1226
R1	1-216-624-11	s	METAL, CHIP 75 0.50% 1/10W
R2	1-216-073-00	s	METAL, CHIP 10K 5% 1/10W
R3	1-216-085-00	s	METAL, CHIP 33K 5% 1/10W
R4	1-216-049-91	s	METAL, CHIP 1K 5% 1/10W
R5	1-216-001-00	s	METAL, CHIP 10 5% 1/10W
R6	1-216-073-00	s	METAL, CHIP 10K 5% 1/10W
R7	1-216-093-91	s	METAL, CHIP 68K 5% 1/10W
R8	1-216-636-11	s	METAL, CHIP 240 0.5% 1/10W
R9	1-216-651-11	s	METAL, CHIP 1K 0.5% 1/10W
R10	1-216-663-11	s	METAL, CHIP 3.3K 0.5% 1/10W
R11	1-216-057-00	s	METAL, CHIP 2.2K 5% 1/10W
R12	1-216-295-11	s	CONDUCTOR, CHIP 0
R13	1-216-675-11	s	METAL, CHIP 10K 0.5% 1/10W
R14	1-216-638-11	s	METAL, CHIP 300 0.50% 1/10W
R15	1-216-073-00	s	METAL, CHIP 10K 5% 1/10W
R16	1-216-067-00	s	METAL, CHIP 5.6K 5% 1/10W
R17	1-216-073-00	s	METAL, CHIP 10K 5% 1/10W
R18	1-216-001-00	s	METAL, CHIP 10 5% 1/10W
R19	1-216-093-91	s	METAL, CHIP 68K 5% 1/10W
R20	1-216-636-11	s	METAL, CHIP 240 0.5% 1/10W
R21	1-216-651-11	s	METAL, CHIP 1K 0.5% 1/10W
R22	1-216-663-11	s	METAL, CHIP 3.3K 0.5% 1/10W
R23	1-216-057-00	s	METAL, CHIP 2.2K 5% 1/10W
R24	1-216-295-11	s	CONDUCTOR, CHIP 0
R25	1-216-675-11	s	METAL, CHIP 10K 0.5% 1/10W
R26	1-216-638-11	s	METAL, CHIP 300 0.50% 1/10W
R27	1-216-073-00	s	METAL, CHIP 10K 5% 1/10W
R28	1-216-059-00	s	METAL, CHIP 2.7K 5% 1/10W
R29	1-216-001-00	s	METAL, CHIP 10 5% 1/10W
R30	1-216-067-00	s	METAL, CHIP 5.6K 5% 1/10W
R31	1-216-091-00	s	METAL, CHIP 56K 5% 1/10W
R32	1-216-636-11	s	METAL, CHIP 240 0.5% 1/10W
R33	1-216-651-11	s	METAL, CHIP 1K 0.5% 1/10W
R34	1-216-663-11	s	METAL, CHIP 3.3K 0.5% 1/10W
R35	1-216-057-00	s	METAL, CHIP 2.2K 5% 1/10W

(YD-26 BOARD)

Ref. No. or Q'ty	Part No.	SP	Description
R36	1-216-295-11	s	CONDUCTOR, CHIP 0
R37	1-216-073-00	s	METAL, CHIP 10K 5% 1/10W
R38	1-216-638-11	s	METAL, CHIP 300 0.50% 1/10W
R39	1-216-067-00	s	METAL, CHIP 5.6K 5% 1/10W
R40	1-216-057-00	s	METAL, CHIP 2.2K 5% 1/10W
R41	1-216-001-00	s	METAL, CHIP 10 5% 1/10W
R42	1-216-063-00	s	METAL, CHIP 3.9K 5% 1/10W
R43	1-216-089-91	s	METAL, CHIP 47k 5% 1/10W
R44	1-216-637-11	s	METAL, CHIP 270 0.5% 1/10W
R45	1-216-651-11	s	METAL, CHIP 1K 0.5% 1/10W
R46	1-216-663-11	s	METAL, CHIP 3.3K 0.5% 1/10W
R47	1-216-057-00	s	METAL, CHIP 2.2K 5% 1/10W
R48	1-216-675-11	s	METAL, CHIP 10K 0.5% 1/10W
R49	1-216-638-11	s	METAL, CHIP 300 0.50% 1/10W
R50	1-216-033-00	s	METAL, CHIP 220 5% 1/10W
R51	1-216-061-00	s	METAL, CHIP 3.3K 5% 1/10W
R52	1-216-051-00	s	METAL, CHIP 1.2K 5% 1/10W
R53	1-216-001-00	s	METAL, CHIP 10 5% 1/10W
R54	1-216-055-00	s	METAL, CHIP 1.8K 5% 1/10W
R55	1-216-055-00	s	METAL, CHIP 1.8K 5% 1/10W
R56	1-216-085-00	s	METAL, CHIP 33K 5% 1/10W
R57	1-216-636-11	s	METAL, CHIP 240 0.5% 1/10W
R58	1-216-651-11	s	METAL, CHIP 1K 0.5% 1/10W
R59	1-216-663-11	s	METAL, CHIP 3.3K 0.5% 1/10W
R60	1-216-057-00	s	METAL, CHIP 2.2K 5% 1/10W
R61	1-216-295-11	s	CONDUCTOR, CHIP 0
R62	1-216-668-11	s	METAL, CHIP 5.1K 0.5% 1/10W
R63	1-216-635-11	s	METAL, CHIP 220 0.5% 1/10W
R64	1-216-055-00	s	METAL, CHIP 1.8K 5% 1/10W
R65	1-216-055-00	s	METAL, CHIP 1.8K 5% 1/10W
R66	1-216-057-00	s	METAL, CHIP 2.2K 5% 1/10W
R67	1-216-065-00	s	METAL, CHIP 4.7K 5% 1/10W
R68	1-216-043-91	s	METAL, CHIP 560 5% 1/10W
R69	1-216-051-00	s	METAL, CHIP 1.2K 5% 1/10W
R70	1-216-055-00	s	METAL, CHIP 1.8K 5% 1/10W
R71	1-216-073-00	s	METAL, CHIP 10K 5% 1/10W
R72	1-216-133-00	s	METAL, CHIP 3.3M 5% 1/10W
R73	1-216-667-11	s	METAL, CHIP 4.7K 0.5% 1/10W
R74	1-208-784-11	s	METAL, CHIP 1.2K 0.50% 1/10W
R75	1-216-669-11	s	METAL, CHIP 5.6K 0.5% 1/10W
R76	1-216-073-00	s	METAL, CHIP 10K 5% 1/10W
R77	1-216-679-11	s	METAL, CHIP 15K 0.5% 1/10W
R78	1-216-660-11	s	METAL, CHIP 2.4K 0.50% 1/10W
R79	1-216-672-11	s	METAL, CHIP 7.5K 0.5% 1/10W
R80	1-216-643-11	s	METAL, CHIP 470 0.5% 1/10W
R81	1-216-665-11	s	METAL, CHIP 3.9K 0.5% 1/10W
R82	1-216-073-00	s	METAL, CHIP 10K 5% 1/10W
R83	1-216-081-00	s	METAL, CHIP 22K 5% 1/10W
R84	1-216-073-00	s	METAL, CHIP 10K 5% 1/10W
R85	1-216-675-11	s	METAL, CHIP 10K 0.5% 1/10W
R86	1-216-121-91	s	METAL, CHIP 1M 5% 1/10W
R87	1-216-081-00	s	METAL, CHIP 22K 5% 1/10W
R88	1-216-675-11	s	METAL, CHIP 10K 0.5% 1/10W
R89	1-216-097-00	s	METAL, CHIP 100K 5% 1/10W
R90	1-216-097-00	s	METAL, CHIP 100K 5% 1/10W
R91	1-216-073-00	s	METAL, CHIP 10K 5% 1/10W
R92	1-216-073-00	s	METAL, CHIP 10K 5% 1/10W
R93	1-216-073-00	s	METAL, CHIP 10K 5% 1/10W
R94	1-216-691-11	s	METAL, CHIP 47K 0.50% 1/10W

(YD-26 BOARD)

Ref. No. or Q'ty	Part No.	SP	Description
R95	1-216-687-11	s	METAL, CHIP 33K 0.5% 1/10W
R96	1-216-627-11	s	METAL, CHIP 100 0.50% 1/10W
R97	1-216-073-00	s	METAL, CHIP 10K 5% 1/10W
R98	1-216-085-00	s	METAL, CHIP 33K 5% 1/10W
R99	1-216-049-91	s	METAL, CHIP 1K 5% 1/10W
R100	1-216-001-00	s	METAL, CHIP 10 5% 1/10W
R101	1-216-073-00	s	METAL, CHIP 10K 5% 1/10W
R102	1-216-083-00	s	METAL, CHIP 27K 5% 1/10W
R103	1-216-636-11	s	METAL, CHIP 240 0.5% 1/10W
R104	1-216-647-11	s	METAL, CHIP 680 0.5% 1/10W
R105	1-216-661-11	s	METAL, CHIP 2.7K 0.5% 1/10W
R106	1-216-661-11	s	METAL, CHIP 2.7K 0.5% 1/10W
R107	1-216-651-11	s	METAL, CHIP 1K 0.5% 1/10W
R108	1-216-671-11	s	METAL, CHIP 6.8K 0.50% 1/10W
R109	1-216-638-11	s	METAL, CHIP 300 0.50% 1/10W
R110	1-216-065-00	s	METAL, CHIP 4.7K 5% 1/10W
R111	1-216-065-00	s	METAL, CHIP 4.7K 5% 1/10W
R112	1-216-001-00	s	METAL, CHIP 10 5% 1/10W
R113	1-216-073-00	s	METAL, CHIP 10K 5% 1/10W
R114	1-216-083-00	s	METAL, CHIP 27K 5% 1/10W
R115	1-216-636-11	s	METAL, CHIP 240 0.5% 1/10W
R116	1-216-647-11	s	METAL, CHIP 680 0.5% 1/10W
R117	1-216-661-11	s	METAL, CHIP 2.7K 0.5% 1/10W
R118	1-216-661-11	s	METAL, CHIP 2.7K 0.5% 1/10W
R119	1-216-651-11	s	METAL, CHIP 1K 0.5% 1/10W
R120	1-216-671-11	s	METAL, CHIP 6.8K 0.50% 1/10W
R121	1-216-638-11	s	METAL, CHIP 300 0.50% 1/10W
R122	1-216-065-00	s	METAL, CHIP 4.7K 5% 1/10W
R123	1-216-065-00	s	METAL, CHIP 4.7K 5% 1/10W
R124	1-216-001-00	s	METAL, CHIP 10 5% 1/10W
R125	1-216-073-00	s	METAL, CHIP 10K 5% 1/10W
R126	1-216-083-00	s	METAL, CHIP 27K 5% 1/10W
R127	1-216-636-11	s	METAL, CHIP 240 0.5% 1/10W
R128	1-216-647-11	s	METAL, CHIP 680 0.5% 1/10W
R129	1-216-661-11	s	METAL, CHIP 2.7K 0.5% 1/10W
R130	1-216-661-11	s	METAL, CHIP 2.7K 0.5% 1/10W
R131	1-216-651-11	s	METAL, CHIP 1K 0.5% 1/10W
R132	1-216-671-11	s	METAL, CHIP 6.8K 0.50% 1/10W
R133	1-216-638-11	s	METAL, CHIP 300 0.50% 1/10W
R134	1-216-057-00	s	METAL, CHIP 2.2K 5% 1/10W
R135	1-216-057-00	s	METAL, CHIP 2.2K 5% 1/10W
R136	1-216-001-00	s	METAL, CHIP 10 5% 1/10W
R137	1-216-065-00	s	METAL, CHIP 4.7K 5% 1/10W
R138	1-216-083-00	s	METAL, CHIP 27K 5% 1/10W
R139	1-216-636-11	s	METAL, CHIP 240 0.5% 1/10W
R140	1-216-647-11	s	METAL, CHIP 680 0.5% 1/10W
R141	1-216-661-11	s	METAL, CHIP 2.7K 0.5% 1/10W
R142	1-216-661-11	s	METAL, CHIP 2.7K 0.5% 1/10W
R143	1-216-651-11	s	METAL, CHIP 1K 0.5% 1/10W
R144	1-216-671-11	s	METAL, CHIP 6.8K 0.50% 1/10W
R145	1-216-638-11	s	METAL, CHIP 300 0.50% 1/10W
R146	1-216-033-00	s	METAL, CHIP 220 5% 1/10W
R147	1-216-055-00	s	METAL, CHIP 1.8K 5% 1/10W
R148	1-216-055-00	s	METAL, CHIP 1.8K 5% 1/10W
R149	1-216-001-00	s	METAL, CHIP 10 5% 1/10W
R150	1-216-057-00	s	METAL, CHIP 2.2K 5% 1/10W
R151	1-216-057-00	s	METAL, CHIP 2.2K 5% 1/10W
R152	1-216-079-00	s	METAL, CHIP 18K 5% 1/10W
R153	1-216-636-11	s	METAL, CHIP 240 0.5% 1/10W

(YD-26 BOARD)

Ref. No. or Q'ty	Part No.	SP	Description
R154	1-216-647-11	s	METAL, CHIP 680 0.5% 1/10W
R155	1-216-661-11	s	METAL, CHIP 2.7K 0.5% 1/10W
R156	1-216-661-11	s	METAL, CHIP 2.7K 0.5% 1/10W
R157	1-216-651-11	s	METAL, CHIP 1K 0.5% 1/10W
R158	1-216-671-11	s	METAL, CHIP 6.8K 0.50% 1/10W
R159	1-216-057-00	s	METAL, CHIP 2.2K 5% 1/10W
R160	1-216-635-11	s	METAL, CHIP 220 0.5% 1/10W
R161	1-216-053-00	s	METAL, CHIP 1.5K 5% 1/10W
R162	1-216-053-00	s	METAL, CHIP 1.5K 5% 1/10W
R180	1-216-640-11	s	METAL, CHIP 360 0.5% 1/10W
R181	1-216-650-11	s	METAL, CHIP 910 0.50% 1/10W
R182	1-216-637-11	s	METAL, CHIP 270 0.5% 1/10W
R183	1-216-649-11	s	METAL, CHIP 820 0.50% 1/10W
R184	1-216-637-11	s	METAL, CHIP 270 0.5% 1/10W
R185	1-216-637-11	s	METAL, CHIP 270 0.5% 1/10W
R186	1-216-673-11	s	METAL, CHIP 8.2K 0.5% 1/10W
R187	1-216-658-11	s	METAL, CHIP 2K 0.5% 1/10W
R188	1-216-063-00	s	METAL, CHIP 3.9K 5% 1/10W
R189	1-216-063-00	s	METAL, CHIP 3.9K 5% 1/10W
R190	1-216-025-11	s	METAL, CHIP 100 5% 1/10W
R191	1-216-661-11	s	METAL, CHIP 2.7K 0.5% 1/10W
R192	1-216-663-11	s	METAL, CHIP 3.3K 0.5% 1/10W
R193	1-216-073-00	s	METAL, CHIP 10K 5% 1/10W
R194	1-216-113-00	s	METAL, CHIP 470K 5% 1/10W
R195	1-216-133-00	s	METAL, CHIP 3.3M 5% 1/10W
R196	1-216-097-00	s	METAL, CHIP 100K 5% 1/10W
R197	1-216-081-00	s	METAL, CHIP 22K 5% 1/10W
R198	1-216-073-00	s	METAL, CHIP 10K 5% 1/10W
R199	1-216-085-00	s	METAL, CHIP 33K 5% 1/10W
R200	1-216-125-00	s	METAL, CHIP 1.5M 5% 1/10W
R201	1-216-121-91	s	METAL, CHIP 1M 5% 1/10W
R202	1-216-033-00	s	METAL, CHIP 220 5% 1/10W
R203	1-216-065-00	s	METAL, CHIP 4.7K 5% 1/10W
R204	1-216-077-00	s	METAL, CHIP 15K 5% 1/10W
R206	1-216-061-00	s	METAL, CHIP 3.3K 5% 1/10W
R207	1-216-643-11	s	METAL, CHIP 470 0.5% 1/10W
R208	1-218-772-11	s	METAL, CHIP 680K 0.50% 1/10W
R209	1-216-661-11	s	METAL, CHIP 2.7K 0.5% 1/10W
R210	1-216-073-00	s	METAL, CHIP 10K 5% 1/10W
R211	1-216-025-11	s	METAL, CHIP 100 5% 1/10W
R212	1-216-067-00	s	METAL, CHIP 5.6K 5% 1/10W
R213	1-216-057-00	s	METAL, CHIP 2.2K 5% 1/10W
R214	1-216-694-11	s	METAL, CHIP 62K 0.50% 1/10W
R215	1-216-025-11	s	METAL, CHIP 100 5% 1/10W
R216	1-216-657-11	s	METAL, CHIP 1.8K 0.5% 1/10W
R217	1-216-683-11	s	METAL, CHIP 22K 0.50% 1/10W
R218	1-216-067-00	s	METAL, CHIP 5.6K 5% 1/10W
R219	1-216-067-00	s	METAL, CHIP 5.6K 5% 1/10W
R220	1-216-662-11	s	METAL, CHIP 3K 0.50% 1/10W
R221	1-216-073-00	s	METAL, CHIP 10K 5% 1/10W
R222	1-216-067-00	s	METAL, CHIP 5.6K 5% 1/10W
R223	1-216-073-00	s	METAL, CHIP 10K 5% 1/10W
R224	1-208-784-11	s	METAL, CHIP 1.2K 0.50% 1/10W
R225	1-216-073-00	s	METAL, CHIP 10K 5% 1/10W
R226	1-216-073-00	s	METAL, CHIP 10K 5% 1/10W
R227	1-216-057-00	s	METAL, CHIP 2.2K 5% 1/10W
R228	1-216-025-11	s	METAL, CHIP 100 5% 1/10W
R229	1-216-667-11	s	METAL, CHIP 4.7K 0.5% 1/10W
R230	1-216-295-11	s	CONDUCTOR, CHIP 0

(YD-26 BOARD)

Ref. No. or Q'ty	Part No.	SP	Description
R231	1-216-666-11	s	METAL, CHIP 4.3K 0.5% 1/10W
R232	1-216-295-11	s	CONDUCTOR, CHIP 0
R233	1-216-049-91	s	METAL, CHIP 1K 5% 1/10W
R234	1-216-651-11	s	METAL, CHIP 1K 0.5% 1/10W
R235	1-216-651-11	s	METAL, CHIP 1K 0.5% 1/10W
R236	1-216-651-11	s	METAL, CHIP 1K 0.5% 1/10W
R237	1-216-670-11	s	METAL, CHIP 6.2K 0.50% 1/10W
R238	1-216-651-11	s	METAL, CHIP 1K 0.5% 1/10W
R239	1-216-651-11	s	METAL, CHIP 1K 0.5% 1/10W
R240	1-216-661-11	s	METAL, CHIP 2.7K 0.5% 1/10W
R241	1-216-067-00	s	METAL, CHIP 5.6K 5% 1/10W
R242	1-216-025-11	s	METAL, CHIP 100 5% 1/10W
R243	1-216-025-11	s	METAL, CHIP 100 5% 1/10W
R244	1-216-025-11	s	METAL, CHIP 100 5% 1/10W
R245	1-216-057-00	s	METAL, CHIP 2.2K 5% 1/10W
R246	1-216-025-11	s	METAL, CHIP 100 5% 1/10W
R247	1-216-081-00	s	METAL, CHIP 22K 5% 1/10W
R248	1-216-643-11	s	METAL, CHIP 470 0.5% 1/10W
R249	1-216-665-11	s	METAL, CHIP 3.9K 0.5% 1/10W
R250	1-216-651-11	s	METAL, CHIP 1K 0.5% 1/10W
R251	1-216-664-11	s	METAL, CHIP 3.6K 0.50% 1/10W
R252	1-216-675-11	s	METAL, CHIP 10K 0.5% 1/10W
R253	1-216-681-11	s	METAL, CHIP 18K 0.5% 1/10W
R254	1-216-659-11	s	METAL, CHIP 2.2K 0.5% 1/10W
R256	1-216-025-11	s	METAL, CHIP 100 5% 1/10W
R257	1-216-025-11	s	METAL, CHIP 100 5% 1/10W
R258	1-216-073-00	s	METAL, CHIP 10K 5% 1/10W
R259	1-216-073-00	s	METAL, CHIP 10K 5% 1/10W
R260	1-216-651-11	s	METAL, CHIP 1K 0.5% 1/10W
R261	1-216-105-00	s	METAL, CHIP 220K 5% 1/10W
R262	1-216-683-11	s	METAL, CHIP 22K 0.50% 1/10W
R263	1-216-667-11	s	METAL, CHIP 4.7K 0.5% 1/10W
R264	1-216-073-00	s	METAL, CHIP 10K 5% 1/10W
R265	1-216-667-11	s	METAL, CHIP 4.7K 0.5% 1/10W
R267	1-216-673-11	s	METAL, CHIP 8.2K 0.5% 1/10W
R268	1-216-643-11	s	METAL, CHIP 470 0.5% 1/10W
R269	1-216-657-11	s	METAL, CHIP 1.8K 0.5% 1/10W
R270	1-216-643-11	s	METAL, CHIP 470 0.5% 1/10W
R271	1-216-053-00	s	METAL, CHIP 1.5K 5% 1/10W
R272	1-216-643-11	s	METAL, CHIP 470 0.5% 1/10W
R273	1-216-643-11	s	METAL, CHIP 470 0.5% 1/10W
R274	1-216-643-11	s	METAL, CHIP 470 0.5% 1/10W
R275	1-216-670-11	s	METAL, CHIP 6.2K 0.50% 1/10W
R276	1-216-651-11	s	METAL, CHIP 1K 0.5% 1/10W
R277	1-216-651-11	s	METAL, CHIP 1K 0.5% 1/10W
R278	1-216-661-11	s	METAL, CHIP 2.7K 0.5% 1/10W
R279	1-216-067-00	s	METAL, CHIP 5.6K 5% 1/10W
R280	1-216-025-11	s	METAL, CHIP 100 5% 1/10W
R281	1-216-025-11	s	METAL, CHIP 100 5% 1/10W
R282	1-216-025-11	s	METAL, CHIP 100 5% 1/10W
R283	1-216-057-00	s	METAL, CHIP 2.2K 5% 1/10W
R284	1-216-025-11	s	METAL, CHIP 100 5% 1/10W
R285	1-216-081-00	s	METAL, CHIP 22K 5% 1/10W
R286	1-216-663-11	s	METAL, CHIP 3.3K 0.5% 1/10W
R287	1-216-651-11	s	METAL, CHIP 1K 0.5% 1/10W
R288	1-216-631-11	s	METAL, CHIP 150 0.50% 1/10W
R289	1-216-635-11	s	METAL, CHIP 220 0.5% 1/10W
R290	1-216-631-11	s	METAL, CHIP 150 0.50% 1/10W
R291	1-216-644-11	s	METAL, CHIP 510 0.5% 1/10W

(YD-26 BOARD)

Ref. No. or Q'ty	Part No.	SP	Description
R292	1-216-644-11	s	METAL, CHIP 510 0.5% 1/10W
R293	1-216-678-11	s	METAL, CHIP 13K 0.50% 1/10W
R294	1-216-685-11	s	METAL, CHIP 27K 0.5% 1/10W
R297	1-216-649-11	s	METAL, CHIP 820 0.50% 1/10W
R298	1-216-644-11	s	METAL, CHIP 510 0.5% 1/10W
R299	1-216-053-00	s	METAL, CHIP 1.5K 5% 1/10W
R300	1-216-644-11	s	METAL, CHIP 510 0.5% 1/10W
R301	1-216-073-00	s	METAL, CHIP 10K 5% 1/10W
R302	1-216-654-11	s	METAL, CHIP 1.3K 0.5% 1/10W
R303	1-216-049-91	s	METAL, CHIP 1K 5% 1/10W
R304	1-216-091-00	s	METAL, CHIP 56K 5% 1/10W
R305	1-216-049-91	s	METAL, CHIP 1K 5% 1/10W
R306	1-216-603-11	s	METAL, CHIP 10 0.50% 1/10W
R307	1-218-768-11	s	METAL, CHIP 470K 0.50% 1/10W
R308	1-216-669-11	s	METAL, CHIP 5.6K 0.5% 1/10W
R309	1-216-089-91	s	METAL, CHIP 47k 5% 1/10W
R310	1-216-025-11	s	METAL, CHIP 100 5% 1/10W
R311	1-216-025-11	s	METAL, CHIP 100 5% 1/10W
R312	1-216-085-00	s	METAL, CHIP 33K 5% 1/10W
R313	1-216-099-00	s	METAL, CHIP 120K 5% 1/10W
R314	1-216-690-11	s	METAL, CHIP 43K 0.50% 1/10W
R315	1-216-670-11	s	METAL, CHIP 6.2K 0.50% 1/10W
R316	1-216-121-91	s	METAL, CHIP 1M 5% 1/10W
R325	1-216-675-11	s	METAL, CHIP 10K 0.5% 1/10W
R326	1-216-669-11	s	METAL, CHIP 5.6K 0.5% 1/10W
R327	1-216-668-11	s	METAL, CHIP 5.1K 0.5% 1/10W
R328	1-216-675-11	s	METAL, CHIP 10K 0.5% 1/10W
R350	1-216-652-11	s	METAL, CHIP 1.1K 0.5% 1/10W
R351	1-216-638-11	s	METAL, CHIP 300 0.50% 1/10W
R352	1-216-638-11	s	METAL, CHIP 300 0.50% 1/10W
R353	1-216-651-11	s	METAL, CHIP 1K 0.5% 1/10W
R354	1-216-638-11	s	METAL, CHIP 300 0.50% 1/10W
R355	1-216-638-11	s	METAL, CHIP 300 0.50% 1/10W
R356	1-216-661-11	s	METAL, CHIP 2.7K 0.5% 1/10W
R357	1-216-067-00	s	METAL, CHIP 5.6K 5% 1/10W
R358	1-216-665-11	s	METAL, CHIP 3.9K 0.5% 1/10W
R359	1-216-651-11	s	METAL, CHIP 1K 0.5% 1/10W
R360	1-216-063-00	s	METAL, CHIP 3.9K 5% 1/10W
R361	1-216-651-11	s	METAL, CHIP 1K 0.5% 1/10W
R362	1-216-660-11	s	METAL, CHIP 2.4K 0.50% 1/10W
R363	1-216-067-00	s	METAL, CHIP 5.6K 5% 1/10W
R364	1-216-668-11	s	METAL, CHIP 5.1K 0.5% 1/10W
R365	1-216-658-11	s	METAL, CHIP 2K 0.5% 1/10W
R366	1-216-065-00	s	METAL, CHIP 4.7K 5% 1/10W
R367	1-216-675-11	s	METAL, CHIP 10K 0.5% 1/10W
R368	1-216-675-11	s	METAL, CHIP 10K 0.5% 1/10W
R369	1-216-073-00	s	METAL, CHIP 10K 5% 1/10W
R370	1-216-121-91	s	METAL, CHIP 1M 5% 1/10W
R371	1-216-097-00	s	METAL, CHIP 100K 5% 1/10W
R372	1-216-073-00	s	METAL, CHIP 10K 5% 1/10W
R373	1-218-769-11	s	METAL, CHIP 510K 0.50% 1/10W
R374	1-216-081-00	s	METAL, CHIP 22K 5% 1/10W
R375	1-216-083-00	s	METAL, CHIP 27K 5% 1/10W
R376	1-216-121-91	s	METAL, CHIP 1M 5% 1/10W
R377	1-216-045-00	s	METAL, CHIP 680 5% 1/10W
R378	1-216-670-11	s	METAL, CHIP 6.2K 0.50% 1/10W
R379	1-216-651-11	s	METAL, CHIP 1K 0.5% 1/10W
R380	1-216-651-11	s	METAL, CHIP 1K 0.5% 1/10W
R381	1-216-661-11	s	METAL, CHIP 2.7K 0.5% 1/10W

(YD-26 BOARD)

Ref. No. or Q'ty	Part No.	SP	Description
R382	1-216-067-00	s	METAL, CHIP 5.6K 5% 1/10W
R383	1-216-025-11	s	METAL, CHIP 100 5% 1/10W
R384	1-216-025-11	s	METAL, CHIP 100 5% 1/10W
R385	1-216-025-11	s	METAL, CHIP 100 5% 1/10W
R386	1-216-057-00	s	METAL, CHIP 2.2K 5% 1/10W
R387	1-216-025-11	s	METAL, CHIP 100 5% 1/10W
R388	1-216-081-00	s	METAL, CHIP 22K 5% 1/10W
R389	1-216-663-11	s	METAL, CHIP 3.3K 0.5% 1/10W
R390	1-216-651-11	s	METAL, CHIP 1K 0.5% 1/10W
R391	1-216-649-11	s	METAL, CHIP 820 0.50% 1/10W
R392	1-216-644-11	s	METAL, CHIP 510 0.5% 1/10W
R393	1-216-649-11	s	METAL, CHIP 820 0.50% 1/10W
R394	1-216-647-11	s	METAL, CHIP 680 0.5% 1/10W
R395	1-216-647-11	s	METAL, CHIP 680 0.5% 1/10W
R396	1-216-685-11	s	METAL, CHIP 27K 0.5% 1/10W
R397	1-216-673-11	s	METAL, CHIP 8.2K 0.5% 1/10W
R398	1-216-669-11	s	METAL, CHIP 5.6K 0.5% 1/10W
R400	1-216-089-91	s	METAL, CHIP 47k 5% 1/10W
R401	1-216-691-11	s	METAL, CHIP 47K 0.50% 1/10W
R402	1-216-663-11	s	METAL, CHIP 3.3K 0.5% 1/10W
R403	1-216-025-11	s	METAL, CHIP 100 5% 1/10W
R405	1-216-643-11	s	METAL, CHIP 470 0.5% 1/10W
R406	1-216-679-11	s	METAL, CHIP 15K 0.5% 1/10W
R407	1-216-655-11	s	METAL, CHIP 1.5K 0.50% 1/10W
R408	1-216-073-00	s	METAL, CHIP 10K 5% 1/10W
R409	1-216-103-00	s	METAL, CHIP 180K 5% 1/10W
R410	1-216-025-11	s	METAL, CHIP 100 5% 1/10W
R411	1-216-025-11	s	METAL, CHIP 100 5% 1/10W
R412	1-216-603-11	s	METAL, CHIP 10 0.50% 1/10W
R413	1-216-651-11	s	METAL, CHIP 1K 0.5% 1/10W
R414	1-216-073-00	s	METAL, CHIP 10K 5% 1/10W
R415	1-216-129-00	s	METAL, CHIP 2.2M 5% 1/10W
R416	1-216-067-00	s	METAL, CHIP 5.6K 5% 1/10W
R417	1-216-073-00	s	METAL, CHIP 10K 5% 1/10W
R418	1-216-675-11	s	METAL, CHIP 10K 0.5% 1/10W
R419	1-216-675-11	s	METAL, CHIP 10K 0.5% 1/10W
R420	1-216-693-11	s	METAL, CHIP 56K 0.5% 1/10W
R421	1-216-667-11	s	METAL, CHIP 4.7K 0.5% 1/10W
R422	1-216-049-91	s	METAL, CHIP 1K 5% 1/10W
R423	1-218-760-11	s	METAL, CHIP 220K 0.50% 1/10W
R424	1-216-670-11	s	METAL, CHIP 6.2K 0.50% 1/10W
R425	1-216-675-11	s	METAL, CHIP 10K 0.5% 1/10W
R427	1-216-073-00	s	METAL, CHIP 10K 5% 1/10W
R428	1-216-667-11	s	METAL, CHIP 4.7K 0.5% 1/10W
R429	1-216-643-11	s	METAL, CHIP 470 0.5% 1/10W
R430	1-216-057-00	s	METAL, CHIP 2.2K 5% 1/10W
R431	1-216-643-11	s	METAL, CHIP 470 0.5% 1/10W
R432	1-216-057-00	s	METAL, CHIP 2.2K 5% 1/10W
R433	1-216-025-11	s	METAL, CHIP 100 5% 1/10W
R434	1-216-065-00	s	METAL, CHIP 4.7K 5% 1/10W
R439	1-216-049-91	s	METAL, CHIP 1K 5% 1/10W
R440	1-216-670-11	s	METAL, CHIP 6.2K 0.50% 1/10W
R441	1-216-651-11	s	METAL, CHIP 1K 0.5% 1/10W
R442	1-216-651-11	s	METAL, CHIP 1K 0.5% 1/10W
R443	1-216-661-11	s	METAL, CHIP 2.7K 0.5% 1/10W
R444	1-216-067-00	s	METAL, CHIP 5.6K 5% 1/10W
R445	1-216-025-11	s	METAL, CHIP 100 5% 1/10W
R446	1-216-025-11	s	METAL, CHIP 100 5% 1/10W
R447	1-216-025-11	s	METAL, CHIP 100 5% 1/10W

(YD-26 BOARD)

Ref. No. or Q'ty	Part No.	SP	Description
R448	1-216-057-00	s	METAL, CHIP 2.2K 5% 1/10W
R449	1-216-025-11	s	METAL, CHIP 100 5% 1/10W
R450	1-216-081-00	s	METAL, CHIP 22K 5% 1/10W
R451	1-216-663-11	s	METAL, CHIP 3.3K 0.5% 1/10W
R452	1-216-651-11	s	METAL, CHIP 1K 0.5% 1/10W
R453	1-216-639-11	s	METAL, CHIP 330 0.5% 1/10W
R454	1-216-651-11	s	METAL, CHIP 1K 0.5% 1/10W
R455	1-216-651-11	s	METAL, CHIP 1K 0.5% 1/10W
R456	1-216-647-11	s	METAL, CHIP 680 0.5% 1/10W
R457	1-216-647-11	s	METAL, CHIP 680 0.5% 1/10W
R458	1-216-685-11	s	METAL, CHIP 27K 0.5% 1/10W
R459	1-216-673-11	s	METAL, CHIP 8.2K 0.5% 1/10W
R460	1-216-655-11	s	METAL, CHIP 1.5K 0.50% 1/10W
R462	1-216-073-00	s	METAL, CHIP 10K 5% 1/10W
R463	1-216-089-91	s	METAL, CHIP 47k 5% 1/10W
R464	1-216-691-11	s	METAL, CHIP 47K 0.50% 1/10W
R465	1-216-662-11	s	METAL, CHIP 3K 0.50% 1/10W
R466	1-216-025-11	s	METAL, CHIP 100 5% 1/10W
R468	1-216-643-11	s	METAL, CHIP 470 0.5% 1/10W
R469	1-216-679-11	s	METAL, CHIP 15K 0.5% 1/10W
R470	1-216-651-11	s	METAL, CHIP 1K 0.5% 1/10W
R471	1-208-784-11	s	METAL, CHIP 1.2K 0.50% 1/10W
R472	1-216-073-00	s	METAL, CHIP 10K 5% 1/10W
R473	1-216-103-00	s	METAL, CHIP 180K 5% 1/10W
R474	1-216-025-11	s	METAL, CHIP 100 5% 1/10W
R475	1-216-025-11	s	METAL, CHIP 100 5% 1/10W
R476	1-216-073-00	s	METAL, CHIP 10K 5% 1/10W
R477	1-216-129-00	s	METAL, CHIP 2.2M 5% 1/10W
R478	1-216-067-00	s	METAL, CHIP 5.6K 5% 1/10W
R479	1-216-073-00	s	METAL, CHIP 10K 5% 1/10W
R480	1-216-677-11	s	METAL, CHIP 12K 0.5% 1/10W
R481	1-216-675-11	s	METAL, CHIP 10K 0.5% 1/10W
R482	1-216-685-11	s	METAL, CHIP 27K 0.5% 1/10W
R483	1-216-049-91	s	METAL, CHIP 1K 5% 1/10W
R484	1-218-760-11	s	METAL, CHIP 220K 0.50% 1/10W
R485	1-216-661-11	s	METAL, CHIP 2.7K 0.5% 1/10W
R486	1-216-672-11	s	METAL, CHIP 7.5K 0.5% 1/10W
R487	1-216-648-11	s	METAL, CHIP 750 0.50% 1/10W
R488	1-216-065-00	s	METAL, CHIP 4.7K 5% 1/10W
R489	1-216-057-00	s	METAL, CHIP 2.2K 5% 1/10W
R490	1-216-025-11	s	METAL, CHIP 100 5% 1/10W
R493	1-216-603-11	s	METAL, CHIP 10 0.50% 1/10W
R496	1-216-049-91	s	METAL, CHIP 1K 5% 1/10W
R687	1-216-668-11	s	METAL, CHIP 5.1K 0.5% 1/10W
R689	1-216-656-11	s	METAL, CHIP 1.6K 0.50% 1/10W
R690	1-216-656-11	s	METAL, CHIP 1.6K 0.50% 1/10W
R691	1-216-073-00	s	METAL, CHIP 10K 5% 1/10W
R692	1-216-652-11	s	METAL, CHIP 1.1K 0.5% 1/10W
R694	1-216-067-00	s	METAL, CHIP 5.6K 5% 1/10W
R697	1-216-683-11	s	METAL, CHIP 22K 0.50% 1/10W
R698	1-216-683-11	s	METAL, CHIP 22K 0.50% 1/10W
R699	1-216-009-91	s	METAL, CHIP 22 5% 1/10W
R701	1-216-097-00	s	METAL, CHIP 100K 5% 1/10W
R702	1-216-097-00	s	METAL, CHIP 100K 5% 1/10W
R703	1-216-097-00	s	METAL, CHIP 100K 5% 1/10W
R704	1-216-049-91	s	METAL, CHIP 1K 5% 1/10W
R791	1-216-651-11	s	METAL, CHIP 1K 0.5% 1/10W
R792	1-216-659-11	s	METAL, CHIP 2.2K 0.5% 1/10W
R793	1-216-661-11	s	METAL, CHIP 2.7K 0.5% 1/10W

(YD-26 BOARD)

Ref. No. or Q'ty	Part No.	SP	Description
R794	1-216-675-11	s	METAL, CHIP 10K 0.5% 1/10W
R795	1-216-671-11	s	METAL, CHIP 6.8K 0.50% 1/10W
R797	1-216-651-11	s	METAL, CHIP 1K 0.5% 1/10W
R798	1-216-659-11	s	METAL, CHIP 2.2K 0.5% 1/10W
R799	1-216-661-11	s	METAL, CHIP 2.7K 0.5% 1/10W
R800	1-216-675-11	s	METAL, CHIP 10K 0.5% 1/10W
R801	1-216-671-11	s	METAL, CHIP 6.8K 0.50% 1/10W
R803	1-216-651-11	s	METAL, CHIP 1K 0.5% 1/10W
R804	1-216-659-11	s	METAL, CHIP 2.2K 0.5% 1/10W
R805	1-216-661-11	s	METAL, CHIP 2.7K 0.5% 1/10W
R806	1-216-675-11	s	METAL, CHIP 10K 0.5% 1/10W
R807	1-216-671-11	s	METAL, CHIP 6.8K 0.50% 1/10W
R809	1-216-651-11	s	METAL, CHIP 1K 0.5% 1/10W
R810	1-216-659-11	s	METAL, CHIP 2.2K 0.5% 1/10W
R811	1-216-655-11	s	METAL, CHIP 1.5K 0.50% 1/10W
R812	1-216-671-11	s	METAL, CHIP 6.8K 0.50% 1/10W
R813	1-216-671-11	s	METAL, CHIP 6.8K 0.50% 1/10W
R816	1-216-651-11	s	METAL, CHIP 1K 0.5% 1/10W
R817	1-216-659-11	s	METAL, CHIP 2.2K 0.5% 1/10W
R818	1-216-660-11	s	METAL, CHIP 2.4K 0.50% 1/10W
R819	1-216-675-11	s	METAL, CHIP 10K 0.5% 1/10W
R820	1-216-663-11	s	METAL, CHIP 3.3K 0.5% 1/10W
R822	1-216-648-11	s	METAL, CHIP 750 0.50% 1/10W
R823	1-216-658-11	s	METAL, CHIP 2K 0.5% 1/10W
R824	1-216-627-11	s	METAL, CHIP 100 0.50% 1/10W
R825	1-218-756-11	s	METAL, CHIP 150K 0.50% 1/10W
R827	1-216-648-11	s	METAL, CHIP 750 0.50% 1/10W
R828	1-216-627-11	s	METAL, CHIP 100 0.50% 1/10W
R829	1-216-658-11	s	METAL, CHIP 2K 0.5% 1/10W
R830	1-218-756-11	s	METAL, CHIP 150K 0.50% 1/10W
R832	1-216-648-11	s	METAL, CHIP 750 0.50% 1/10W
R833	1-216-658-11	s	METAL, CHIP 2K 0.5% 1/10W
R834	1-216-627-11	s	METAL, CHIP 100 0.50% 1/10W
R835	1-218-756-11	s	METAL, CHIP 150K 0.50% 1/10W
R837	1-216-655-11	s	METAL, CHIP 1.5K 0.50% 1/10W
R838	1-216-658-11	s	METAL, CHIP 2K 0.5% 1/10W
R839	1-216-627-11	s	METAL, CHIP 100 0.50% 1/10W
R840	1-218-756-11	s	METAL, CHIP 150K 0.50% 1/10W
R843	1-216-648-11	s	METAL, CHIP 750 0.50% 1/10W
R844	1-216-658-11	s	METAL, CHIP 2K 0.5% 1/10W
R845	1-216-627-11	s	METAL, CHIP 100 0.50% 1/10W
R846	1-218-756-11	s	METAL, CHIP 150K 0.50% 1/10W
R860	1-216-651-11	s	METAL, CHIP 1K 0.5% 1/10W
R862	1-216-663-11	s	METAL, CHIP 3.3K 0.5% 1/10W
R863	1-216-643-11	s	METAL, CHIP 470 0.5% 1/10W
R864	1-216-667-11	s	METAL, CHIP 4.7K 0.5% 1/10W
R865	1-216-661-11	s	METAL, CHIP 2.7K 0.5% 1/10W
R866	1-216-663-11	s	METAL, CHIP 3.3K 0.5% 1/10W
R867	1-216-643-11	s	METAL, CHIP 470 0.5% 1/10W
R868	1-216-663-11	s	METAL, CHIP 3.3K 0.5% 1/10W
R869	1-216-661-11	s	METAL, CHIP 2.7K 0.5% 1/10W
R870	1-216-667-11	s	METAL, CHIP 4.7K 0.5% 1/10W
R871	1-216-639-11	s	METAL, CHIP 330 0.5% 1/10W
R872	1-216-667-11	s	METAL, CHIP 4.7K 0.5% 1/10W
R873	1-216-295-11	s	CONDUCTOR, CHIP 0
R874	1-216-651-11	s	METAL, CHIP 1K 0.5% 1/10W
R875	1-216-669-11	s	METAL, CHIP 5.6K 0.5% 1/10W
R876	1-216-667-11	s	METAL, CHIP 4.7K 0.5% 1/10W
R877	1-216-651-11	s	METAL, CHIP 1K 0.5% 1/10W

(YD-26 BOARD)

Ref. No. or Q'ty	Part No.	SP	Description
R878	1-216-659-11	s	METAL, CHIP 2.2K 0.5% 1/10W
R879	1-216-675-11	s	METAL, CHIP 10K 0.5% 1/10W
R880	1-216-675-11	s	METAL, CHIP 10K 0.5% 1/10W
R881	1-216-627-11	s	METAL, CHIP 100 0.50% 1/10W
R882	1-216-651-11	s	METAL, CHIP 1K 0.5% 1/10W
R884	1-216-663-11	s	METAL, CHIP 3.3K 0.5% 1/10W
R885	1-216-659-11	s	METAL, CHIP 2.2K 0.5% 1/10W
R886	1-216-643-11	s	METAL, CHIP 470 0.5% 1/10W
R887	1-216-663-11	s	METAL, CHIP 3.3K 0.5% 1/10W
R888	1-216-295-11	s	CONDUCTOR, CHIP 0
R889	1-216-654-11	s	METAL, CHIP 1.3K 0.5% 1/10W
R890	1-216-675-11	s	METAL, CHIP 10K 0.5% 1/10W
R891	1-216-666-11	s	METAL, CHIP 4.3K 0.5% 1/10W
R892	1-216-627-11	s	METAL, CHIP 100 0.50% 1/10W
R893	1-216-295-11	s	CONDUCTOR, CHIP 0
R894	1-208-784-11	s	METAL, CHIP 1.2K 0.50% 1/10W
R895	1-216-295-11	s	CONDUCTOR, CHIP 0
R897	1-216-295-11	s	CONDUCTOR, CHIP 0
R898	1-216-651-11	s	METAL, CHIP 1K 0.5% 1/10W
R899	1-216-295-11	s	CONDUCTOR, CHIP 0
R903	1-216-650-11	s	METAL, CHIP 910 0.50% 1/10W
R904	1-216-295-11	s	CONDUCTOR, CHIP 0
R906	1-216-133-00	s	METAL, CHIP 3.3M 5% 1/10W
R907	1-216-133-00	s	METAL, CHIP 3.3M 5% 1/10W
R908	1-216-691-11	s	METAL, CHIP 47K 0.50% 1/10W
R909	1-216-667-11	s	METAL, CHIP 4.7K 0.5% 1/10W
R910	1-216-691-11	s	METAL, CHIP 47K 0.50% 1/10W
R911	1-216-647-11	s	METAL, CHIP 680 0.5% 1/10W
R912	1-216-119-00	s	METAL, CHIP 820K 5% 1/10W
R913	1-216-651-11	s	METAL, CHIP 1K 0.5% 1/10W
R914	1-218-760-11	s	METAL, CHIP 220K 0.50% 1/10W
R915	1-216-683-11	s	METAL, CHIP 22K 0.50% 1/10W
R917	1-216-692-11	s	METAL, CHIP 51K 0.50% 1/10W
R918	1-216-692-11	s	METAL, CHIP 51K 0.50% 1/10W
R920	1-216-295-11	s	CONDUCTOR, CHIP 0
R921	1-216-295-11	s	CONDUCTOR, CHIP 0
R922	1-216-295-11	s	CONDUCTOR, CHIP 0
R925	1-216-295-11	s	CONDUCTOR, CHIP 0
R926	1-216-295-11	s	CONDUCTOR, CHIP 0
R928	1-216-295-11	s	CONDUCTOR, CHIP 0
R930	1-216-025-11	s	METAL, CHIP 100 5% 1/10W
R931	1-216-295-11	s	CONDUCTOR, CHIP 0
R932	1-216-295-11	s	CONDUCTOR, CHIP 0
R933	1-216-295-11	s	CONDUCTOR, CHIP 0
R937	1-216-097-00	s	METAL, CHIP 100K 5% 1/10W
R938	1-216-097-00	s	METAL, CHIP 100K 5% 1/10W
R939	1-216-097-00	s	METAL, CHIP 100K 5% 1/10W
RV1	1-237-032-11	s	RES, ADJ METAL 500
RV2	1-237-034-11	s	RES, ADJ METAL 2K
RV3	1-237-038-11	s	RES, ADJ METAL 50K
RV4	1-237-034-11	s	RES, ADJ METAL 2K
RV5	1-237-034-11	s	RES, ADJ METAL 2K
RV6	1-237-037-11	s	RES, ADJ METAL 20K
RV7	1-237-036-11	s	RES, ADJ METAL 10K
RV8	1-237-034-11	s	RES, ADJ METAL 2K
RV9	1-237-034-11	s	RES, ADJ METAL 2K
RV10	1-237-034-11	s	RES, ADJ METAL 2K
RV11	1-237-034-11	s	RES, ADJ METAL 2K

(YD-26 BOARD)

Ref. No. or Q'ty	Part No.	SP	Description
RV12	1-237-033-11	s	RES, ADJ METAL 1K
RV13	1-237-035-11	s	RES, ADJ METAL 5K
RV14	1-237-037-11	s	RES, ADJ METAL 20K
RV15	1-237-036-11	s	RES, ADJ METAL 10K
RV16	1-237-034-11	s	RES, ADJ METAL 2K
RV17	1-237-033-11	s	RES, ADJ METAL 1K
RV18	1-237-035-11	s	RES, ADJ METAL 5K
RV24	1-237-037-11	s	RES, ADJ METAL 20K
S1	1-570-711-11	s	SWITCH, SLIDE
S2	1-692-066-11	s	SWITCH, ROTARY
S3	1-570-711-11	s	SWITCH, SLIDE
S4	1-570-711-11	s	SWITCH, SLIDE
W1	1-957-710-11	o	HARNESS, SUB (Y RF)
X1	1-760-439-11	s	OSCILLATOR, CRYSTAL 22.5MHz
X2	1-760-438-11	s	CRYSTAL 45.00MHz

SWITCHING REGULATOR

Ref. No. or Q'ty	Part No.	SP	Description
1pc	⚠ 1-468-215-13	s	REGULATOR, SWITCHING
1pc	2-990-241-02	s	HOLDER(A), PLUG
1pc	3-715-610-21	s	KNOB, PS
1pc	3-715-611-03	s	GURDE, PS
1pc	7-623-208-22	s	SW3, TYPE2
1pc	7-627-556-57	s	PRECISION SCREW +P2.6X5
1pc	7-682-248-09	s	SCREW +K 3X8
1pc	7-682-549-09	s	SCREW +B 3X10
1pc	7-682-648-01	s	SCREW +PS 3X8
1pc	7-682-650-01	s	SCREW +PS 3X12
1pc	7-682-652-01	s	SCREW +PS 3X16
1pc	7-682-661-01	s	SCREW +PS 4X8
1pc	7-684-023-01	s	SCREW N3 TYPE2
1pc	7-682-655-01	s	SCREW +PS 3X30

PE-18 BOARD
****

1pc	1-620-916-11	o	PRINTED CIRCUIT BOARD, PE-18
CN206	1-506-481-11	o	CONNECTOR, 2P, MALE
D1	8-719-027-67	s	DIODE GL8KG21T

PS-502 BOARD
****

1pc	9-939-947-01	s	MOUNTED CIRCUIT BOARD, PS-502
C1	⚠ 1-107-533-11	s	FILM 1uF 20% 250V
C2	⚠ 1-104-706-11	s	FILM 0.22uF 20% 250V
C3	⚠ 1-104-706-11	s	FILM 0.22uF 20% 250V
C4	⚠ 1-113-889-11	s	CERAMIC 1000pF 20% 250V
C5	⚠ 1-113-889-11	s	CERAMIC 1000pF 20% 250V
C6	⚠ 1-113-889-11	s	CERAMIC 1000pF 20% 250V
C7	⚠ 1-113-889-11	s	CERAMIC 1000pF 20% 250V
C8	⚠ 1-113-889-11	s	CERAMIC 1000pF 20% 250V
C9	⚠ 1-113-889-11	s	CERAMIC 1000pF 20% 250V
C10	⚠ 1-104-706-11	s	FILM 0.22uF 20% 250V
C11	1-163-009-91	s	CERAMIC 1000pF 10% 50V
C12	9-939-965-01	s	CERAMIC 100pF 50V
C13	9-939-965-01	s	CERAMIC 100pF 50V
C14	9-939-955-01	s	ELECT 220uF 35V
C15	9-939-973-01	s	TANTALUM 10uF 35V
C16	1-163-009-91	s	CERAMIC 1000pF 10% 50V
C17	9-939-967-01	s	CERAMIC 0.1uF 50V
C18	9-939-967-01	s	CERAMIC 0.1uF 50V
C19	9-939-967-01	s	CERAMIC 0.1uF 50V
C20	9-939-967-01	s	CERAMIC 0.1uF 50V
C21	9-939-967-01	s	CERAMIC 0.1uF 50V
C22	9-939-966-01	s	CERAMIC 0.01uF 50V
C23	9-939-969-01	s	FILM 0.01uF 250V
C24	9-939-967-01	s	CERAMIC 0.1uF 50V
C25	9-939-967-01	s	CERAMIC 0.1uF 50V
C26	1-137-198-11	s	FILM 1uF 5% 50V
C27	1-137-198-11	s	FILM 1uF 5% 50V
C28	1-104-514-11	s	FILM 0.22uF 10% 250V
C29	1-104-514-11	s	FILM 0.22uF 10% 250V

(SWITCHING REGULATOR)

Ref. No. or Q'ty	Part No.	SP	Description
C30	1-104-514-11	s	FILM 0.22uF 10% 250V
C31	1-104-514-11	s	FILM 0.22uF 10% 250V
C32	9-939-973-01	s	TANTALUM 10uF 35V
C33	9-939-967-01	s	CERAMIC 0.1uF 50V
C34	9-939-967-01	s	CERAMIC 0.1uF 50V
C35	9-939-967-01	s	CERAMIC 0.1uF 50V
C36	9-939-967-01	s	CERAMIC 0.1uF 50V
C37	1-163-009-91	s	CERAMIC 1000pF 10% 50V
C38	9-939-966-01	s	CERAMIC 0.01uF 50V
C39	9-939-966-01	s	CERAMIC 0.01uF 50V
C40	9-939-966-01	s	CERAMIC 0.01uF 50V
C41	9-939-967-01	s	CERAMIC 0.1uF 50V
C42	9-939-973-01	s	TANTALUM 10uF 35V
C43	1-135-076-91	s	TANTALUM 1uF 20% 35V
C44	9-939-967-01	s	CERAMIC 0.1uF 50V
C45	9-939-966-01	s	CERAMIC 0.01uF 50V
C46	1-135-076-91	s	TANTALUM 1uF 20% 35V
C47	9-939-956-01	s	ELECT 470uF 35V
C48	9-939-967-01	s	CERAMIC 0.1uF 50V
C49	9-939-968-01	s	CERAMIC 1uF 25V
C50	9-939-962-01	s	ELECT 10uF 250V
C51	9-939-967-01	s	CERAMIC 0.1uF 50V
C52	9-939-962-01	s	ELECT 10uF 250V
C53	9-939-970-01	s	FILM 0.047uF 250V
C54	9-939-969-01	s	FILM 0.01uF 250V
C55	9-939-969-01	s	FILM 0.01uF 250V
C56	9-939-962-01	s	ELECT 10uF 250V
C57	9-939-969-01	s	FILM 0.01uF 250V
C58	9-939-969-01	s	FILM 0.01uF 250V
C59	9-939-970-01	s	FILM 0.047uF 250V
C60	9-939-970-01	s	FILM 0.047uF 250V
C61	9-939-970-01	s	FILM 0.047uF 250V
C62	9-939-967-01	s	CERAMIC 0.1uF 50V
C63	9-939-967-01	s	CERAMIC 0.1uF 50V
C64	9-939-967-01	s	CERAMIC 0.1uF 50V
C65	1-163-009-91	s	CERAMIC 1000pF 10% 50V
C66	9-939-967-01	s	CERAMIC 0.1uF 50V
C67	9-939-967-01	s	CERAMIC 0.1uF 50V
C68	9-939-970-01	s	FILM 0.047uF 250V
C69	9-939-966-01	s	CERAMIC 0.01uF 50V
C70	9-939-967-01	s	CERAMIC 0.1uF 50V
C71	9-939-967-01	s	CERAMIC 0.1uF 50V
C72	9-939-970-01	s	FILM 0.047uF 250V
C73	9-939-973-01	s	TANTALUM 10uF 35V
C74	1-135-076-91	s	TANTALUM 1uF 20% 35V
C75	1-135-076-91	s	TANTALUM 1uF 20% 35V
C76	1-135-076-91	s	TANTALUM 1uF 20% 35V
C77	1-135-076-91	s	TANTALUM 1uF 20% 35V
C78	1-135-076-91	s	TANTALUM 1uF 20% 35V
C79	9-939-973-01	s	TANTALUM 10uF 35V
C80	9-939-973-01	s	TANTALUM 10uF 35V
C81	9-939-967-01	s	CERAMIC 0.1uF 50V
C82	9-939-967-01	s	CERAMIC 0.1uF 50V
C83	9-939-967-01	s	CERAMIC 0.1uF 50V
C84	9-939-967-01	s	CERAMIC 0.1uF 50V
C85	1-135-076-91	s	TANTALUM 1uF 20% 35V
C86	9-939-967-01	s	CERAMIC 0.1uF 50V
C87	⚠ 1-117-700-11	s	CERAMIC 2200pF 99% 250V
C88	9-939-969-01	s	FILM 0.01uF 250V

(SWITCHING REGULATOR)

Ref. No. or Q'ty	Part No.	SP	Description
C89	9-939-967-01	s	CERAMIC 0.1uF 50V
C90	9-939-967-01	s	CERAMIC 0.1uF 50V
C91	1-163-009-91	s	CERAMIC 1000pF 10% 50V
C92	9-939-967-01	s	CERAMIC 0.1uF 50V
C93	1-135-076-91	s	TANTALUM 1uF 20% 35V
C94	9-939-969-01	s	FILM 0.01uF 250V
C95	1-104-920-91	s	TANTALUM 4.7uF 20% 35V
C96	1-163-009-91	s	CERAMIC 1000pF 10% 50V
CB1	⚠ 9-939-974-01	s	BREAKER
D1	8-719-820-13	s	DIODE 1SS272
D2	8-719-038-48	s	DIODE 1SS319(TE85R)
D3	8-719-510-11	s	DIODE D1FS4
D4	8-719-820-13	s	DIODE 1SS272
D5	8-719-500-30	s	DIODE S10SC4M
D6	8-719-820-13	s	DIODE 1SS272
D7	9-939-975-01	s	DIODE D1FL20U-4063
D8	8-719-510-11	s	DIODE D1FS4
D9	8-719-910-62	s	DIODE HZ6A2L
D10	9-939-978-01	s	DIODE HZM12NB1-TR
D11	8-719-038-48	s	DIODE 1SS319(TE85R)
D12	8-719-910-62	s	DIODE HZ6A2L
D13	8-719-820-13	s	DIODE 1SS272
D14	8-719-820-13	s	DIODE 1SS272
D15	8-719-820-13	s	DIODE 1SS272
D16	8-719-820-13	s	DIODE 1SS272
D17	8-719-820-13	s	DIODE 1SS272
D18	8-719-016-71	s	DIODE HZM15NB3-TL
D19	9-939-975-01	s	DIODE D1FL20U-4063
D20	8-719-820-13	s	DIODE 1SS272
D21	8-719-820-13	s	DIODE 1SS272
D22	8-719-820-13	s	DIODE 1SS272
D23	8-719-038-48	s	DIODE 1SS319(TE85R)
D24	8-719-820-13	s	DIODE 1SS272
D25	8-719-820-13	s	DIODE 1SS272
D26	8-719-820-13	s	DIODE 1SS272
D27	8-719-820-13	s	DIODE 1SS272
D28	8-719-820-13	s	DIODE 1SS272
D29	8-719-820-13	s	DIODE 1SS272
D30	8-719-820-13	s	DIODE 1SS272
D31	8-719-820-13	s	DIODE 1SS272
D32	8-719-820-13	s	DIODE 1SS272
D33	9-939-975-01	s	DIODE D1FL20U-4063
D34	9-939-975-01	s	DIODE D1FL20U-4063
D35	8-719-910-62	s	DIODE HZ6A2L
D36	8-719-820-13	s	DIODE 1SS272
D37	8-719-820-13	s	DIODE 1SS272
D38	8-719-820-13	s	DIODE 1SS272
D39	8-719-820-13	s	DIODE 1SS272
J1	1-251-263-11	s	INLET, AC
J2	1-764-809-11	s	CONNECTOR 4P
J7	1-564-321-11	s	CONNECTOR 2P
J8	1-564-321-11	s	CONNECTOR 2P
J10	1-564-242-11	s	CONNECTOR 5P
J12	1-564-242-11	s	CONNECTOR 5P
J14	1-564-717-11	s	CONNECTOR 15P
J16	1-564-712-11	o	CONNECTOR (SMALL TYPE) 10P MALE
J19	1-560-066-11	o	CONNECTOR 10P
J20	1-560-063-11	o	CONNECTOR 5P

(SWITCHING REGULATOR)

Ref. No. or Q'ty	Part No.	SP	Description
J22	1-564-712-11	o	CONNECTOR (SMALL TYPE) 10P MALE
J23	1-564-707-11	o	CONNECTOR, 5P, MALE
J24	1-564-704-11	o	CONNECOR, 2P, MALE
K1	9-939-981-01	s	RELAY
K2	9-939-981-01	s	RELAY
L1	9-939-983-01	s	COIL
L2	9-939-983-01	s	COIL
L3	9-939-982-01	s	COIL
L4	9-939-982-01	s	COIL
L5	9-939-990-01	s	COIL
L6	9-939-990-01	s	COIL
L7	9-939-984-01	s	COIL
L8	9-939-987-01	s	COIL
L9	9-939-987-01	s	COIL
L10	9-939-987-01	s	COIL
L11	9-939-988-01	s	COIL
L12	1-500-440-11	s	CORE, FERRITE
Q1	8-729-216-21	s	TRANSISTOR 2SA1162-Y
Q2	8-729-200-70	s	TRANSISTOR 2SC2712Y-TE85L
Q3	8-729-209-73	s	TRANSISTOR 2SA1213Y-TE12L
Q4	8-729-200-70	s	TRANSISTOR 2SC2712Y-TE85L
Q5	8-729-216-21	s	TRANSISTOR 2SA1162-Y
Q6	8-729-232-13	s	TRANSISTOR 2SK1078
Q7	8-729-255-12	s	TRANSISTOR 2SC2551
Q8	8-729-216-21	s	TRANSISTOR 2SA1162-Y
Q9	8-729-923-07	s	TRANSISTOR IRF9620
Q10	8-729-923-07	s	TRANSISTOR IRF9620
Q11	8-729-255-12	s	TRANSISTOR 2SC2551
Q12	8-729-255-12	s	TRANSISTOR 2SC2551
Q13	8-729-923-07	s	TRANSISTOR IRF9620
Q14	8-729-232-13	s	TRANSISTOR 2SK1078
Q15	8-729-232-13	s	TRANSISTOR 2SK1078
R1	⚠ 9-939-994-01	s	METAL 100K 1/4W
R2	⚠ 9-939-994-01	s	METAL 100K 1/4W
R3	⚠ 9-939-994-01	s	METAL 100K 1/4W
R4	9-980-011-01	s	METAL 6.8K 1/10W
R5	9-980-008-01	s	METAL 2.2K 1/10W
R6	9-980-015-01	s	METAL 33K 1/10W
R7	9-980-010-01	s	METAL 4.7K 1/10W
R8	9-980-011-01	s	METAL 6.8K 1/10W
R9	9-980-012-01	s	METAL 10K 1/10W
R10	9-980-016-01	s	METAL 47K 1/10W
R11	9-980-018-01	s	METAL 100K 1/10W
R12	9-980-021-01	s	METAL 330K 1/10W
R13	9-980-012-01	s	METAL 10K 1/10W
R14	9-980-008-01	s	METAL 2.2K 1/10W
R15	9-980-011-01	s	METAL 6.8K 1/10W
R16	9-980-019-01	s	METAL 150K 1/10W
R17	9-980-018-01	s	METAL 100K 1/10W
R18	9-980-012-01	s	METAL 10K 1/10W
R19	9-980-009-01	s	METAL 3.3K 1/10W
R20	9-980-021-01	s	METAL 330K 1/10W
R21	9-980-021-01	s	METAL 330K 1/10W
R22	9-980-021-01	s	METAL 330K 1/10W
R23	9-980-021-01	s	METAL 330K 1/10W
R24	9-980-021-01	s	METAL 330K 1/10W
R25	9-980-021-01	s	METAL 330K 1/10W

(SWITCHING REGULATOR)

Ref. No. or Q'ty	Part No.	SP	Description
R26	9-980-014-01	s	METAL 22K 1/10W
R27	9-980-018-01	s	METAL 100K 1/10W
R28	9-980-012-01	s	METAL 10K 1/10W
R29	9-980-011-01	s	METAL 6.8K 1/10W
R30	9-980-016-01	s	METAL 47K 1/10W
R31	9-980-018-01	s	METAL 100K 1/10W
R32	9-980-024-01	s	METAL 1M 1/10W
R33	9-980-013-01	s	METAL 15K 1/10W
R34	9-939-999-01	s	METAL 150 1/10W
R35	9-980-009-01	s	METAL 3.3K 1/10W
R36	9-980-011-01	s	METAL 6.8K 1/10W
R37	9-939-998-01	s	METAL 100 1/10W
R38	9-939-998-01	s	METAL 100 1/10W
R39	9-980-010-01	s	METAL 4.7K 1/10W
R40	9-980-012-01	s	METAL 10K 1/10W
R41	9-980-012-01	s	METAL 10K 1/10W
R42	9-980-014-01	s	METAL 22K 1/10W
R43	9-980-012-01	s	METAL 10K 1/10W
R44	9-980-012-01	s	METAL 10K 1/10W
R45	9-980-011-01	s	METAL 6.8K 1/10W
R46	9-980-006-01	s	METAL 1K 1/10W
R47	9-980-010-01	s	METAL 4.7K 1/10W
R48	9-980-004-01	s	METAL 470 1/10W
R49	9-980-016-01	s	METAL 47K 1/10W
R50	9-980-004-01	s	METAL 470 1/10W
R51	9-980-009-01	s	METAL 3.3K 1/10W
R52	9-980-014-01	s	METAL 22K 1/10W
R53	9-980-010-01	s	METAL 4.7K 1/10W
R54	9-980-010-01	s	METAL 4.7K 1/10W
R55	9-980-012-01	s	METAL 10K 1/10W
R56	9-980-023-01	s	METAL 680K 1/10W
R57	9-980-023-01	s	METAL 680K 1/10W
R58	9-980-022-01	s	METAL 470K 1/10W
R59	9-980-015-01	s	METAL 33K 1/10W
R60	1-215-893-51	s	METAL 1.5K 5% 2W
R61	9-980-014-01	s	METAL 22K 1/10W
R62	9-980-014-01	s	METAL 22K 1/10W
R63	9-980-012-01	s	METAL 10K 1/10W
R64	9-980-007-01	s	METAL 1.5 1/10W
R65	9-980-021-01	s	METAL 330K 1/10W
R66	9-980-024-01	s	METAL 1M 1/10W
R67	9-980-020-01	s	METAL 220K 1/10W
R68	9-980-020-01	s	METAL 220K 1/10W
R69	9-980-007-01	s	METAL 1.5 1/10W
R70	9-980-007-01	s	METAL 1.5 1/10W
R71	9-980-006-01	s	METAL 1K 1/10W
R72	9-980-012-01	s	METAL 10K 1/10W
R73	9-980-013-01	s	METAL 15K 1/10W
R74	9-980-011-01	s	METAL 6.8K 1/10W
R75	9-980-008-01	s	METAL 2.2K 1/10W
R76	9-980-008-01	s	METAL 2.2K 1/10W
R77	9-980-014-01	s	METAL 22K 1/10W
R78	9-980-016-01	s	METAL 47K 1/10W
R79	9-980-015-01	s	METAL 33K 1/10W
R80	9-980-015-01	s	METAL 33K 1/10W
R81	9-980-011-01	s	METAL 6.8K 1/10W
R82	9-980-005-01	s	METAL 680 1/10W
R83	9-980-010-01	s	METAL 4.7K 1/10W
R84	9-980-010-01	s	METAL 4.7K 1/10W

(SWITCHING REGULATOR)

Ref. No. or Q'ty	Part No.	SP	Description
R85	9-980-014-01	s	METAL 22K 1/10W
R86	9-980-011-01	s	METAL 6.8K 1/10W
R87	9-980-020-01	s	METAL 220K 1/10W
R88	1-216-349-51	s	METAL 1 5% 1W
R89	9-980-012-01	s	METAL 10K 1/10W
R90	9-980-009-01	s	METAL 3.3K 1/10W
R91	9-980-015-01	s	METAL 33K 1/10W
R92	9-980-021-01	s	METAL 330K 1/10W
R93	9-980-018-01	s	METAL 100K 1/10W
R94	9-980-012-01	s	METAL 10K 1/10W
R95	9-980-012-01	s	METAL 10K 1/10W
R96	9-980-014-01	s	METAL 22K 1/10W
R97	9-980-009-01	s	METAL 3.3K 1/10W
R98	9-980-009-01	s	METAL 3.3K 1/10W
R99	9-980-008-01	s	METAL 2.2K 1/10W
R100	9-980-002-01	s	METAL 220 1/10W
R101	9-980-012-01	s	METAL 10K 1/10W
R102	9-980-016-01	s	METAL 47K 1/10W
R103	9-980-016-01	s	METAL 47K 1/10W
R104	9-980-016-01	s	METAL 47K 1/10W
R105	9-980-009-01	s	METAL 3.3K 1/10W
R106	9-980-011-01	s	METAL 6.8K 1/10W
R107	9-980-006-01	s	METAL 1K 1/10W
R108	9-980-016-01	s	METAL 47K 1/10W
R109	9-980-010-01	s	METAL 4.7K 1/10W
R110	9-980-011-01	s	METAL 6.8K 1/10W
R111	9-980-011-01	s	METAL 6.8K 1/10W
R112	9-980-012-01	s	METAL 10K 1/10W
R113	9-980-021-01	s	METAL 330K 1/10W
R114	9-980-022-01	s	METAL 470K 1/10W
R115	9-980-011-01	s	METAL 6.8K 1/10W
R116	1-215-974-21	s	METAL 0.1 5% 1W
R117	9-980-002-01	s	METAL 220 1/10W
R118	9-980-015-01	s	METAL 33K 1/10W
R119	9-980-015-01	s	METAL 33K 1/10W
R120	9-980-015-01	s	METAL 33K 1/10W
R121	9-980-010-01	s	METAL 4.7K 1/10W
R122	9-939-999-01	s	METAL 150 1/10W
R123	9-980-012-01	s	METAL 10K 1/10W
R124	9-980-014-01	s	METAL 22K 1/10W
R125	9-980-011-01	s	METAL 6.8K 1/10W
R126	9-939-997-01	s	METAL 47 1/10W
R127	9-939-997-01	s	METAL 47 1/10W
R128	1-215-926-51	s	METAL 33K 5% 3W
R129	9-980-018-01	s	METAL 100K 1/10W
R130	9-980-014-01	s	METAL 22K 1/10W
R131	9-980-014-01	s	METAL 22K 1/10W
R132	9-980-011-01	s	METAL 6.8K 1/10W
R133	1-215-865-51	s	METAL 220 5% 1W
R134	1-215-865-51	s	METAL 220 5% 1W
R135	9-939-995-01	s	METAL 10 1/10W
R136	9-980-016-01	s	METAL 47K 1/10W
R137	9-980-018-01	s	METAL 100K 1/10W
R138	9-980-022-01	s	METAL 470K 1/10W
R139	9-980-014-01	s	METAL 22K 1/10W
R140	9-980-021-01	s	METAL 330K 1/10W
R141	9-980-020-01	s	METAL 220K 1/10W
R142	9-980-009-01	s	METAL 3.3K 1/10W
R143	9-980-012-01	s	METAL 10K 1/10W

(SWITCHING REGULATOR)

Ref. No. or Q'ty	Part No.	SP	Description
R144	9-980-016-01	s	METAL 47K 1/10W
R145	9-980-011-01	s	METAL 6.8K 1/10W
R146	9-980-023-01	s	METAL 680K 1/10W
R147	9-980-011-01	s	METAL 6.8K 1/10W
R148	9-980-010-01	s	METAL 4.7K 1/10W
R149	9-980-018-01	s	METAL 100K 1/10W
R150	9-980-006-01	s	METAL 1K 1/10W
R151	9-980-006-01	s	METAL 1K 1/10W
R152	9-980-012-01	s	METAL 10K 1/10W
R153	9-980-012-01	s	METAL 10K 1/10W
R154	9-980-012-01	s	METAL 10K 1/10W
R155	9-980-018-01	s	METAL 100K 1/10W
R156	9-980-018-01	s	METAL 100K 1/10W
R157	9-980-018-01	s	METAL 100K 1/10W
R158	9-980-023-01	s	METAL 680K 1/10W
R159	9-980-024-01	s	METAL 1M 1/10W
R160	9-980-020-01	s	METAL 220K 1/10W
R161	9-980-010-01	s	METAL 4.7K 1/10W
R162	9-980-010-01	s	METAL 4.7K 1/10W
R163	9-980-010-01	s	METAL 4.7K 1/10W
R164	9-980-023-01	s	METAL 680K 1/10W
R165	9-980-012-01	s	METAL 10K 1/10W
R166	9-980-007-01	s	METAL 1.5 1/10W
R167	9-980-014-01	s	METAL 22K 1/10W
R168	9-980-022-01	s	METAL 470K 1/10W
R169	9-980-018-01	s	METAL 100K 1/10W
R170	9-980-008-01	s	METAL 2.2K 1/10W
R171	9-980-014-01	s	METAL 22K 1/10W
R172	9-980-017-01	s	METAL 68K 1/10W
R173	9-980-021-01	s	METAL 330K 1/10W
R174	9-980-012-01	s	METAL 10K 1/10W
R175	9-980-010-01	s	METAL 4.7K 1/10W
R176	9-980-023-01	s	METAL 680K 1/10W
R177	9-980-023-01	s	METAL 680K 1/10W
R178	9-980-024-01	s	METAL 1M 1/10W
R179	9-980-008-01	s	METAL 2.2K 1/10W
R180	9-980-006-01	s	METAL 1K 1/10W
R181	9-980-015-01	s	METAL 33K 1/10W
R182	9-980-010-01	s	METAL 4.7K 1/10W
R183	9-980-006-01	s	METAL 1K 1/10W
R184	9-980-004-01	s	METAL 470 1/10W
R185	9-980-017-01	s	METAL 68K 1/10W
R186	9-980-017-01	s	METAL 68K 1/10W
R187	9-939-995-01	s	METAL 10 1/10W
IC1	9-980-044-01	s	IC UC3854AN
IC2	9-980-040-01	s	IC UPC78L15J
IC3	8-759-100-95	s	IC UPC324G2
IC4	8-759-100-97	s	IC UPC339G2
IC5	8-759-100-95	s	IC UPC324G2
IC6	8-759-100-95	s	IC UPC324G2
IC7	8-759-200-68	s	IC TC4011BF
IC8	9-980-039-01	s	IC TLP521GR(TP1)
IC9	9-980-039-01	s	IC TLP521GR(TP1)
IC10	9-980-039-01	s	IC TLP521GR(TP1)
IC11	⚠ 9-980-041-01	s	IC TLP721(D4-GR-LF4)
IC12	⚠ 9-980-041-01	s	IC TLP721(D4-GR-LF4)
IC13	⚠ 9-980-041-01	s	IC TLP721(D4-GR-LF4)
IC14	9-980-039-01	s	IC TLP521GR(TP1)
IC15	9-980-039-01	s	IC TLP521GR(TP1)

(SWITCHING REGULATOR)

Ref. No. or Q'ty	Part No.	SP	Description
IC16	9-980-039-01	s	IC TLP521GR(TP1)
IC17	9-980-039-01	s	IC TLP521GR(TP1)
IC18	9-980-039-01	s	IC TLP521GR(TP1)
IC19	8-759-200-79	s	IC TC4049BF
IC20	8-759-906-22	s	IC MB3759PF
IC21	8-759-100-95	s	IC UPC324G2
IC22	8-759-100-95	s	IC UPC324G2
IC23	8-759-100-95	s	IC UPC324G2
IC24	8-759-100-95	s	IC UPC324G2
IC25	8-759-147-47	s	IC UPC1093T
IC26	8-759-100-95	s	IC UPC324G2
IC27	8-759-200-84	s	IC TC4081BF
IC28	8-759-200-84	s	IC TC4081BF
IC29	8-759-200-68	s	IC TC4011BF
IC30	8-759-200-68	s	IC TC4011BF
IC31	8-759-147-47	s	IC UPC1093T
IC32	8-759-906-22	s	IC MB3759PF

PS-502 BOARD
****

1pc	9-939-948-01	s	MOUNTED CIRCUIT BOARD, PS-503
1pc	1-533-162-11	s	HOLDER, FUSE
C201	9-939-972-01	s	FILM 0.47uF 630V
C202	9-939-971-01	s	FILM 0.01uF 630V
C203	1-107-792-11	s	CERAMIC 100pF 5% 1KV
C204	⚠ 1-117-700-11	s	CERAMIC 2200pF 99% 250V
C205	9-939-967-01	s	CERAMIC 0.1uF 50V
C206	9-939-967-01	s	CERAMIC 0.1uF 50V
C207	9-939-966-01	s	CERAMIC 0.01uF 50V
C208	9-939-966-01	s	CERAMIC 0.01uF 50V
C209	9-939-956-01	s	ELECT 470uF 35V
C210	1-107-792-11	s	CERAMIC 100pF 5% 1KV
C211	9-939-963-01	s	ELECT 1000uF 250V
C212	9-939-963-01	s	ELECT 1000uF 250V
C213	9-939-962-01	s	ELECT 10uF 250V
C214	9-939-971-01	s	FILM 0.01uF 630V
C215	9-939-956-01	s	ELECT 470uF 35V
C216	9-939-967-01	s	CERAMIC 0.1uF 50V
C217	9-939-969-01	s	FILM 0.01uF 250V
C218	9-939-961-01	s	ELECT 100uF 100V
C219	9-939-961-01	s	ELECT 100uF 100V
C221	9-939-967-01	s	CERAMIC 0.1uF 50V
C222	1-107-792-11	s	CERAMIC 100pF 5% 1KV
C223	1-107-792-11	s	CERAMIC 100pF 5% 1KV
C224	9-939-967-01	s	CERAMIC 0.1uF 50V
C225	9-939-967-01	s	CERAMIC 0.1uF 50V
C226	9-939-967-01	s	CERAMIC 0.1uF 50V
C227	9-939-967-01	s	CERAMIC 0.1uF 50V
C228	1-163-009-91	s	CERAMIC 1000pF 10% 50V
C229	1-135-076-91	s	TANTALUM 1uF 20% 35V
C230	9-939-967-01	s	CERAMIC 0.1uF 50V
C231	9-939-967-01	s	CERAMIC 0.1uF 50V
C232	9-939-973-01	s	TANTALUM 10uF 35V
C234	1-107-792-11	s	CERAMIC 100pF 5% 1KV
C235	9-939-955-01	s	ELECT 220uF 35V
C236	9-939-955-01	s	ELECT 220uF 35V

(SWITCHING REGULATOR)

Ref. No. or Q'ty	Part No.	SP	Description
C237	9-939-954-01	s	ELECT 2200uF 16V
C238	9-939-954-01	s	ELECT 2200uF 16V
C239	1-104-920-91	s	TANTALUM 4.7uF 20% 35V
C240	9-939-967-01	s	CERAMIC 0.1uF 50V
C241	⚠ 9-939-965-01	s	CERAMIC 100pF 50V
C242	9-939-955-01	s	ELECT 220uF 35V
C243	9-939-955-01	s	ELECT 220uF 35V
C244	9-939-955-01	s	ELECT 220uF 35V
C245	9-939-955-01	s	ELECT 220uF 35V
C246	9-939-955-01	s	ELECT 220uF 35V
C247	9-939-967-01	s	CERAMIC 0.1uF 50V
C248	9-939-967-01	s	CERAMIC 0.1uF 50V
C249	1-136-497-11	s	FILM 0.1uF 5% 50V
C251	9-939-959-01	s	ELECT 330uF 50V
C252	9-939-959-01	s	ELECT 330uF 50V
C253	9-939-964-01	s	CERAMIC 2200pF 1KV
C254	9-939-964-01	s	CERAMIC 2200pF 1KV
C255	9-939-967-01	s	CERAMIC 0.1uF 50V
C256	9-939-967-01	s	CERAMIC 0.1uF 50V
C257	9-939-967-01	s	CERAMIC 0.1uF 50V
C258	9-939-967-01	s	CERAMIC 0.1uF 50V
C259	9-939-967-01	s	CERAMIC 0.1uF 50V
C260	9-939-967-01	s	CERAMIC 0.1uF 50V
C261	1-107-792-11	s	CERAMIC 100pF 5% 1KV
C262	1-107-792-11	s	CERAMIC 100pF 5% 1KV
C263	9-939-960-01	s	ELECT 33uF 100V
C264	9-939-960-01	s	ELECT 33uF 100V
C265	9-939-960-01	s	ELECT 33uF 100V
C266	9-939-960-01	s	ELECT 33uF 100V
C267	9-939-969-01	s	FILM 0.01uF 250V
C268	9-939-958-01	s	ELECT 10uF 50V
C269	9-939-955-01	s	ELECT 220uF 35V
C271	1-104-514-11	s	FILM 0.22uF 10% 250V
C272	1-136-497-11	s	FILM 0.1uF 5% 50V
C273	1-136-497-11	s	FILM 0.1uF 5% 50V
D201	8-719-500-16	s	DIODE D5SB60
D202	1-809-505-11	s	DIODE S1WBA60
D203	9-939-977-01	s	DIODE DFG1C8
D204	8-719-510-11	s	DIODE D1FS4
D205	8-719-510-11	s	DIODE D1FS4
D206	9-939-975-01	s	DIODE D1FL20U-4063
D207	9-939-975-01	s	DIODE D1FL20U-4063
D208	9-939-975-01	s	DIODE D1FL20U-4063
D209	8-719-820-13	s	DIODE 1SS272
D021	8-719-820-13	s	DIODE 1SS272
D210	9-939-976-01	s	DIODE D10LC40
D211	9-939-976-01	s	DIODE D10LC40
D212	9-939-977-01	s	DIODE DFG1C8
D213	9-939-975-01	s	DIODE D1FL20U-4063
D214	9-939-977-01	s	DIODE DFG1C8
D215	8-719-510-11	s	DIODE D1FS4
D216	8-719-510-11	s	DIODE D1FS4
D217	9-939-975-01	s	DIODE D1FL20U-4063
D218	8-719-820-13	s	DIODE 1SS272
D219	8-719-820-13	s	DIODE 1SS272
D220	8-719-038-48	s	DIODE 1SS319(TE85R)
D221	9-939-975-01	s	DIODE D1FL20U-4063
D222	9-939-975-01	s	DIODE D1FL20U-4063
D223	9-939-975-01	s	DIODE D1FL20U-4063

(SWITCHING REGULATOR)

Ref. No. or Q'ty	Part No.	SP	Description
D224	9-939-975-01	s	DIODE D1FL20U-4063
D225	8-719-510-09	s	DIODE D10SC6M
D226	8-719-510-09	s	DIODE D10SC6M
D227	8-719-510-09	s	DIODE D10SC6M
D228	8-719-510-09	s	DIODE D10SC6M
D229	8-719-055-33	s	DIODE D1FL40
D230	8-719-055-33	s	DIODE D1FL40
D231	9-939-980-01	s	DIODE 1Z15
D232	9-939-980-01	s	DIODE 1Z15
D233	9-939-979-01	s	DIODE 1Z6.8
D234	9-939-979-01	s	DIODE 1Z6.8
D235	8-719-510-39	s	DIODE D10LC20U
D236	8-719-820-13	s	DIODE 1SS272
D237	8-719-510-11	s	DIODE D1FS4
D238	8-719-510-11	s	DIODE D1FS4
D239	8-719-510-11	s	DIODE D1FS4
D240	8-719-510-11	s	DIODE D1FS4
D241	8-719-055-33	s	DIODE D1FL40
D242	8-719-055-33	s	DIODE D1FL40
D243	8-719-055-33	s	DIODE D1FL40
D244	8-719-055-33	s	DIODE D1FL40
D245	8-719-055-33	s	DIODE D1FL40
D246	8-719-055-33	s	DIODE D1FL40
D247	8-719-055-33	s	DIODE D1FL40
D248	8-719-055-33	s	DIODE D1FL40
D249	8-719-055-33	s	DIODE D1FL40
D250	8-719-055-33	s	DIODE D1FL40
D251	8-719-055-33	s	DIODE D1FL40
D252	8-719-055-33	s	DIODE D1FL40
D253	8-719-055-33	s	DIODE D1FL40
D254	8-719-055-33	s	DIODE D1FL40
D255	8-719-055-33	s	DIODE D1FL40
D256	8-719-055-33	s	DIODE D1FL40
D257	9-939-975-01	s	DIODE D1FL20U-4063
D258	9-939-975-01	s	DIODE D1FL20U-4063
D259	9-939-975-01	s	DIODE D1FL20U-4063
D260	9-939-975-01	s	DIODE D1FL20U-4063
D261	9-939-975-01	s	DIODE D1FL20U-4063
D262	9-939-975-01	s	DIODE D1FL20U-4063
D263	9-939-975-01	s	DIODE D1FL20U-4063
D264	9-939-975-01	s	DIODE D1FL20U-4063
D265	8-719-510-09	s	DIODE D10SC6M
D266	8-719-510-09	s	DIODE D10SC6M
D267	8-719-510-09	s	DIODE D10SC6M
D268	8-719-510-09	s	DIODE D10SC6M
D269	8-719-055-33	s	DIODE D1FL40
D270	8-719-016-71	s	DIODE HZM15NB3-TL
D271	8-719-820-13	s	DIODE 1SS272
D272	9-939-975-01	s	DIODE D1FL20U-4063
D273	9-939-975-01	s	DIODE D1FL20U-4063
D274	9-939-975-01	s	DIODE D1FL20U-4063
D275	9-939-975-01	s	DIODE D1FL20U-4063
F201	⚠ 1-576-230-11	s	FUSE (H.B.C.) 3.15A 250V
IC201	9-980-040-01	s	IC UPC78L15J
IC202	9-980-043-01	s	IC IR2110
IC203	8-759-906-22	s	IC MB3759PF
IC204	8-719-802-04	s	PHOTO TRANSISTOR TLP521-1-GR
IC205	8-759-147-47	s	IC UPC1093T

(SWITCHING REGULATOR)

Ref. No. or Q'ty	Part No.	SP	Description
IC206	9-980-042-01	s	IC MAX4420-CPA
IC207	9-980-042-01	s	IC MAX4420-CPA
J9	1-564-321-11	s	CONNECTOR 2P
J11	1-564-242-11	s	CONNECTOR 5P
J13	1-564-242-11	s	CONNECTOR 5P
J15	1-564-717-11	s	CONNECTOR 15P
J17	1-564-712-11	o	CONNECTOR (SMALL TYPE) 10P MALE
J18	1-566-221-11	s	CONNECTOR 15P
J21	1-564-717-11	s	CONNECTOR 15P
L201	9-939-984-01	s	COIL
L202	9-939-984-01	s	COIL
L203	9-939-986-01	s	COIL
L204	9-939-986-01	s	COIL
L205	9-939-989-01	s	COIL
L206	9-939-987-01	s	COIL
L207	9-939-987-01	s	COIL
L208	9-939-987-01	s	COIL
L209	9-939-987-01	s	COIL
L210	9-939-987-01	s	COIL
L211	9-939-987-01	s	COIL
L212	9-939-985-01	s	COIL
L213	9-939-985-01	s	COIL
L214	1-412-045-11	s	INDUCTOR, 2.2uH
Q201	8-729-927-13	s	TRANSISTOR IRFPE50
Q202	8-729-927-13	s	TRANSISTOR IRFPE50
Q203	9-939-992-01	s	TRANSISTOR 2SC3733K
Q204	9-939-991-01	s	TRANSISTOR 2SA1460K
Q205	9-939-993-01	s	TRANSISTOR IRF630
Q206	9-939-993-01	s	TRANSISTOR IRF630
Q207	9-939-993-01	s	TRANSISTOR IRF630
Q208	8-729-216-21	s	TRANSISTOR 2SA1162-Y
Q209	8-729-710-01	s	TRANSISTOR IRFP054
Q210	8-729-710-01	s	TRANSISTOR IRFP054
Q211	8-729-710-01	s	TRANSISTOR IRFP054
Q212	8-729-710-01	s	TRANSISTOR IRFP054
Q213	8-729-232-13	s	TRANSISTOR 2SK1078
R201	9-980-027-01	s	METAL 150K 2W
R202	9-980-027-01	s	METAL 150K 2W
R203	1-215-859-51	s	METAL 22 5% 1W
R204	1-215-859-51	s	METAL 22 5% 1W
R205	9-939-997-01	s	METAL 47 1/10W
R206	9-980-006-01	s	METAL 1K 1/10W
R207	1-215-900-51	s	METAL 22K 5% 2W
R208	1-215-900-51	s	METAL 22K 5% 2W
R209	9-980-026-01	s	METAL 330K 1W
R210	9-980-026-01	s	METAL 330K 1W
R211	1-215-884-51	s	METAL 47 5% 2W
R212	9-980-028-01	s	METAL 470K 2W
R213	9-980-003-01	s	METAL 330 1/10W
R214	9-980-003-01	s	METAL 330 1/10W
R215	9-980-016-01	s	METAL 47K 1/10W
R216	9-980-017-01	s	METAL 68K 1/10W
R217	9-980-017-01	s	METAL 68K 1/10W
R218	9-939-996-01	s	METAL 22 1/10W
R219	1-215-857-51	s	METAL 10 5% 1W
R220	1-215-857-51	s	METAL 10 5% 1W
R221	9-980-012-01	s	METAL 10K 1/10W

(SWITCHING REGULATOR)

Ref. No. or Q'ty	Part No.	SP	Description
R222	9-980-012-01	s	METAL 10K 1/10W
R223	1-215-861-51	s	METAL 47 5% 1W
R224	1-215-861-51	s	METAL 47 5% 1W
R225	9-980-006-01	s	METAL 1K 1/10W
R226	9-939-996-01	s	METAL 22 1/10W
R227	9-980-016-01	s	METAL 47K 1/10W
R228	9-980-004-01	s	METAL 470 1/10W
R229	9-980-012-01	s	METAL 10K 1/10W
R230	9-980-006-01	s	METAL 1K 1/10W
R231	9-980-012-01	s	METAL 10K 1/10W
R232	9-980-010-01	s	METAL 4.7K 1/10W
R233	9-980-012-01	s	METAL 10K 1/10W
R234	9-980-010-01	s	METAL 4.7K 1/10W
R235	1-215-862-51	s	METAL 68 5% 1W
R236	9-980-005-01	s	METAL 680 1/10W
R237	9-980-009-01	s	METAL 3.3K 1/10W
R238	9-980-008-01	s	METAL 2.2K 1/10W
R239	9-980-012-01	s	METAL 10K 1/10W
R240	9-980-012-01	s	METAL 10K 1/10W
R241	9-980-011-01	s	METAL 6.8K 1/10W
R242	9-980-012-01	s	METAL 10K 1/10W
R243	9-980-009-01	s	METAL 3.3K 1/10W
R244	9-980-014-01	s	METAL 22K 1/10W
R245	9-939-996-01	s	METAL 22 1/10W
R246	9-939-996-01	s	METAL 22 1/10W
R247	9-939-996-01	s	METAL 22 1/10W
R248	9-939-996-01	s	METAL 22 1/10W
R249	9-939-996-01	s	METAL 22 1/10W
R269	9-939-996-01	s	METAL 22 1/10W
R250	9-939-997-01	s	METAL 47 1/10W
R251	1-215-880-51	s	METAL 10 5% 2W
R252	1-215-880-51	s	METAL 10 5% 2W
R253	1-215-857-51	s	METAL 10 5% 1W
R254	1-215-857-51	s	METAL 10 5% 1W
R255	1-216-355-51	s	METAL 3.3 5% 1W
R256	1-216-355-51	s	METAL 3.3 5% 1W
R257	9-980-012-01	s	METAL 10K 1/10W
R258	1-215-857-51	s	METAL 10 5% 1W
R259	1-215-857-51	s	METAL 10 5% 1W
R260	1-216-355-51	s	METAL 3.3 5% 1W
R261	1-216-355-51	s	METAL 3.3 5% 1W
R262	9-980-012-01	s	METAL 10K 1/10W
R263	9-980-012-01	s	METAL 10K 1/10W
R264	9-980-012-01	s	METAL 10K 1/10W
R265	1-215-888-51	s	METAL 220 5% 2W
R266	1-215-888-51	s	METAL 220 5% 2W
R267	1-215-888-51	s	METAL 220 5% 2W
R268	1-215-888-51	s	METAL 220 5% 2W
R269	9-939-996-01	s	METAL 22 1/10W
R270	9-980-014-01	s	METAL 22K 1/10W
R271	9-980-014-01	s	METAL 22K 1/10W
T201	⚠ 9-980-037-01	s	TRANSFORMER
T202	9-980-036-01	s	TRANSFORMER
T203	9-980-029-01	s	TRANSFORMER
T204	9-980-038-01	s	TRANSFORMER
T205	9-980-038-01	s	TRANSFORMER
T206	9-980-038-01	s	TRANSFORMER

(SWITCHING REGULATOR)

Ref. No. or Q'ty	Part No.	SP	Description
			SW BOARD ********
1pc	9-939-949-01	s	MOUNTED CIRCUIT BOARD, SW (POWER SWITCH)
S1	1-692-049-11	s	SWITCH, PUSH (AC POWER)

FRAME

Ref. No. or Q'ty	Part No.	SP	Description
1pc	1-233-915-11	s	FILTER, MPX
1pc	⚠ 1-468-215-13	s	REGULATOR, SWITCHING
CN101	1-560-744-11	s	CONNECTOR, DOUBLE COAXIAL "TRIAX" [For CE]
	1-565-796-11	s	CONNECTOR, DOUBLE COAXIAL "TRIAX" [For UC]
	1-565-798-12	s	CONNECTOR, DOUBLE COAXIAL "TRIAX" [For J]
CN102	1-561-376-00	s	CONNECTOR, (S) 4P FEMALE "WF MODE"
CN103	1-562-782-21	s	CONNECTOR, 10P FEMALE "REMOTE"
CN104	1-774-157-11	s	CONVERTER, COAXIAL CONNECTOR "COAX"
CN201	1-563-159-11	s	CONNECTOR, XLR 5P FEMALE "INCOM"
CN301	1-750-881-11	s	CONVERTER, COAXIAL CONNECTOR "SDI OUT"
F101	1-698-786-11	s	FAN, DC (60 SQUARE)
FB101	1-759-071-11	s	CORE, FERRITE
FB201	1-500-051-11	s	BEAD, FERRITE (WITH CASE)
TO CN1/AU-234 BOARD			
	1-569-620-11	o	HOUSING, CONNECTOR 5P
	1-766-387-11	o	CONTACT, FEMALE
TO CN2/IO-140 BOARD			
	1-562-211-11	o	HOUSING, VH, 3P
	1-562-210-11	o	CONTACT, FEMALE AWG18-22
TO CN2/SDI-44 BOARD			
	1-765-112-12	o	CABLE ASSEMBLY, COAXIAL
TO CN3/SDI-44 BOARD			
	1-765-112-12	o	CABLE ASSEMBLY, COAXIAL
TO CN5/IO-140 BOARD			
	1-776-444-11	s	CABLE ASSEMBLY, COAXIAL
TO CN18/MB-693 BOARD			
	1-565-977-11	s	CONTACT, FEMALE AWG 28-32
	1-569-619-11	o	HOUSING, CONNECTOR 4P
TO CN19/MB-693 BOARD			
	1-568-819-11	o	HOUSING, CONNECTOR 9P
	1-766-387-11	o	CONTACT, FEMALE

SUPPLIED ACCESSORIES

Ref. No. or Q'ty	Part No.	SP	Description
1pc	⚠ 1-551-812-11	s	CORD, POWER[For UC]
1pc	⚠ 1-590-910-11	s	CORD SET, POWER[For CE]
1pc	⚠ 1-782-059-11	s	CORD, POWER[For J]
1pc	2-249-307-00	s	INDICATOR, REMOTE
1pc	2-990-242-01	s	HOLDER (B), PLUG
1pc	3-859-845-02	s	MANUAL, INSTRUCTION (JAPANESE)
1pc	3-859-845-12	s	MANUAL, INSTRUCTION (ENGLISH)
1pc	3-859-845-22	s	MANUAL, INSTRUCTION (FRENCH)
1pc	3-859-845-32	s	MANUAL, INSTRUCTION (GERMAN)
1pc	3-859-845-42	s	MANUAL, INSTRUCTION (ITALIAN)
1pc	3-859-845-52	s	MANUAL, INSTRUCTION (CHINESE)
4pcs	7-682-561-04	s	SCREW +B 4X8

6-3-2. COU-TX7

SW-892 BOARD

Ref. No. or Q'ty	Part No.	SP	Description
1pc	A-8315-069-A	o	MOUNTED CIRCUIT BOARD, SW-892
2pcs	4-937-336-21	o	HOLDER, LED
2pcs	1-565-430-11	s	SOCKET, SIL 10P
C1	1-163-038-91	s	CERAMIC 0.1uF 25V
C2	1-163-038-91	s	CERAMIC 0.1uF 25V
C3	1-163-038-91	s	CERAMIC 0.1uF 25V
C4	1-163-038-91	s	CERAMIC 0.1uF 25V
C5	1-163-038-91	s	CERAMIC 0.1uF 25V
C6	1-163-038-91	s	CERAMIC 0.1uF 25V
C7	1-163-038-91	s	CERAMIC 0.1uF 25V
C8	1-163-038-91	s	CERAMIC 0.1uF 25V
C9	1-163-038-91	s	CERAMIC 0.1uF 25V
C10	1-163-038-91	s	CERAMIC 0.1uF 25V
C11	1-163-038-91	s	CERAMIC 0.1uF 25V
C12	1-163-227-11	s	CERAMIC, CHIP 10PF 5% 50V
C13	1-163-227-11	s	CERAMIC, CHIP 10PF 5% 50V
C14	1-163-227-11	s	CERAMIC, CHIP 10PF 5% 50V
C15	1-163-227-11	s	CERAMIC, CHIP 10PF 5% 50V
C17	1-163-227-11	s	CERAMIC, CHIP 10PF 5% 50V
C18	1-104-823-11	s	TANTALUM, CHIP 47uF 20% 16V
C19	1-104-823-11	s	TANTALUM, CHIP 47uF 20% 16V
C20	1-104-823-11	s	TANTALUM, CHIP 47uF 20% 16V
C21	1-104-823-11	s	TANTALUM, CHIP 47uF 20% 16V
C22	1-104-823-11	s	TANTALUM, CHIP 47uF 20% 16V
C23	1-126-176-11	s	ELECT 220uF 20% 10V
C24	1-126-176-11	s	ELECT 220uF 20% 10V
D1	8-719-970-07	s	DIODE MPG3371X-150
D2	8-719-970-07	s	DIODE MPG3371X-150
D3	8-719-948-06	s	DIODE LB-202ML
D4	8-719-948-06	s	DIODE LB-202ML
IC1	8-759-268-29	s	IC SN74HC595ANS
IC2	8-759-268-29	s	IC SN74HC595ANS
IC3	8-759-268-29	s	IC SN74HC595ANS
IC4	8-759-009-05	s	IC MC14051BF
IC5	8-759-009-05	s	IC MC14051BF
IC6	8-759-009-05	s	IC MC14051BF
IC7	8-759-009-05	s	IC MC14051BF
IC8	8-759-925-80	s	IC SN74HC14ANS
IC9	8-759-998-98	s	IC LM358DR
IC10	8-759-925-74	s	IC SN74HC04ANS
IC11	8-759-925-74	s	IC SN74HC04ANS
L1	1-410-381-11	s	INDUCTOR CHIP 10uH
L2	1-410-381-11	s	INDUCTOR CHIP 10uH
L3	1-410-381-11	s	INDUCTOR CHIP 10uH
L4	1-410-381-11	s	INDUCTOR CHIP 10uH
L5	1-410-381-11	s	INDUCTOR CHIP 10uH
Q1	8-729-159-65	s	TRANSISTOR 2SD596-DV5
Q2	8-729-159-65	s	TRANSISTOR 2SD596-DV5
Q3	8-729-159-65	s	TRANSISTOR 2SD596-DV5
Q4	8-729-159-65	s	TRANSISTOR 2SD596-DV5
Q5	8-729-159-65	s	TRANSISTOR 2SD596-DV5
Q6	8-729-159-65	s	TRANSISTOR 2SD596-DV5
Q7	8-729-159-65	s	TRANSISTOR 2SD596-DV5
Q8	8-729-159-65	s	TRANSISTOR 2SD596-DV5
Q9	8-729-159-65	s	TRANSISTOR 2SD596-DV5
Q10	8-729-159-65	s	TRANSISTOR 2SD596-DV5

(SW-892 BOARD)

Ref. No. or Q'ty	Part No.	SP	Description
Q11	8-729-159-65	s	TRANSISTOR 2SD596-DV5
Q12	8-729-159-65	s	TRANSISTOR 2SD596-DV5
Q13	8-729-159-65	s	TRANSISTOR 2SD596-DV5
Q14	8-729-159-65	s	TRANSISTOR 2SD596-DV5
Q15	8-729-159-65	s	TRANSISTOR 2SD596-DV5
Q16	8-729-159-65	s	TRANSISTOR 2SD596-DV5
Q17	8-729-159-65	s	TRANSISTOR 2SD596-DV5
Q18	8-729-159-65	s	TRANSISTOR 2SD596-DV5
Q19	8-729-159-65	s	TRANSISTOR 2SD596-DV5
Q20	8-729-159-65	s	TRANSISTOR 2SD596-DV5
Q21	8-729-159-65	s	TRANSISTOR 2SD596-DV5
Q22	8-729-159-65	s	TRANSISTOR 2SD596-DV5
Q23	8-729-159-65	s	TRANSISTOR 2SD596-DV5
Q24	8-729-159-65	s	TRANSISTOR 2SD596-DV5
R1	1-216-033-00	s	METAL, CHIP 220 5% 1/10W
R2	1-216-033-00	s	METAL, CHIP 220 5% 1/10W
R3	1-216-033-00	s	METAL, CHIP 220 5% 1/10W
R4	1-216-033-00	s	METAL, CHIP 220 5% 1/10W
R5	1-216-033-00	s	METAL, CHIP 220 5% 1/10W
R6	1-216-033-00	s	METAL, CHIP 220 5% 1/10W
R7	1-216-033-00	s	METAL, CHIP 220 5% 1/10W
R8	1-216-033-00	s	METAL, CHIP 220 5% 1/10W
R9	1-216-033-00	s	METAL, CHIP 220 5% 1/10W
R10	1-216-033-00	s	METAL, CHIP 220 5% 1/10W
R11	1-216-063-91	s	METAL 3.9K 5% 1/10W
R12	1-216-063-91	s	METAL 3.9K 5% 1/10W
R13	1-216-033-00	s	METAL, CHIP 220 5% 1/10W
R14	1-216-033-00	s	METAL, CHIP 220 5% 1/10W
R15	1-216-033-00	s	METAL, CHIP 220 5% 1/10W
R16	1-216-033-00	s	METAL, CHIP 220 5% 1/10W
R17	1-216-033-00	s	METAL, CHIP 220 5% 1/10W
R18	1-216-033-00	s	METAL, CHIP 220 5% 1/10W
R19	1-216-033-00	s	METAL, CHIP 220 5% 1/10W
R20	1-216-033-00	s	METAL, CHIP 220 5% 1/10W
R21	1-216-063-91	s	METAL 3.9K 5% 1/10W
R22	1-216-063-91	s	METAL 3.9K 5% 1/10W
R23	1-216-073-00	s	METAL, CHIP 10K 5% 1/10W
R24	1-216-073-00	s	METAL, CHIP 10K 5% 1/10W
R25	1-216-295-00	s	METAL, CHIP 0 5% 1/10W
R26	1-216-033-00	s	METAL, CHIP 220 5% 1/10W
R30	1-216-049-91	s	METAL 1K 5% 1/10W
R31	1-216-049-91	s	METAL 1K 5% 1/10W
R32	1-216-049-91	s	METAL 1K 5% 1/10W
R33	1-216-049-91	s	METAL 1K 5% 1/10W
R34	1-216-049-91	s	METAL 1K 5% 1/10W
R35	1-216-049-91	s	METAL 1K 5% 1/10W
R36	1-216-049-91	s	METAL 1K 5% 1/10W
R37	1-216-049-91	s	METAL 1K 5% 1/10W
R38	1-216-073-00	s	METAL, CHIP 10K 5% 1/10W
R39	1-216-073-00	s	METAL, CHIP 10K 5% 1/10W
R40	1-216-073-00	s	METAL, CHIP 10K 5% 1/10W
R41	1-216-073-00	s	METAL, CHIP 10K 5% 1/10W
R42	1-216-073-00	s	METAL, CHIP 10K 5% 1/10W
R43	1-216-073-00	s	METAL, CHIP 10K 5% 1/10W
R44	1-216-033-00	s	METAL, CHIP 220 5% 1/10W
R45	1-216-033-00	s	METAL, CHIP 220 5% 1/10W
R46	1-216-063-91	s	METAL 3.9K 5% 1/10W
R47	1-216-063-91	s	METAL 3.9K 5% 1/10W
R48	1-216-063-91	s	METAL 3.9K 5% 1/10W

(SW-892 BOARD)

Ref. No. or Q'ty	Part No.	SP	Description
R49	1-216-063-91	s	METAL 3.9K 5% 1/10W
R50	1-216-063-91	s	METAL 3.9K 5% 1/10W
R51	1-216-063-91	s	METAL 3.9K 5% 1/10W
R52	1-216-063-91	s	METAL 3.9K 5% 1/10W
R53	1-216-063-91	s	METAL 3.9K 5% 1/10W
R54	1-216-063-91	s	METAL 3.9K 5% 1/10W
R55	1-216-063-91	s	METAL 3.9K 5% 1/10W
R56	1-216-063-91	s	METAL 3.9K 5% 1/10W
R57	1-216-063-91	s	METAL 3.9K 5% 1/10W
R58	1-216-063-91	s	METAL 3.9K 5% 1/10W
R59	1-216-063-91	s	METAL 3.9K 5% 1/10W
R60	1-216-063-91	s	METAL 3.9K 5% 1/10W
R61	1-216-063-91	s	METAL 3.9K 5% 1/10W
R62	1-216-073-00	s	METAL, CHIP 10K 5% 1/10W
R63	1-216-073-00	s	METAL, CHIP 10K 5% 1/10W
R64	1-216-073-00	s	METAL, CHIP 10K 5% 1/10W
R65	1-216-073-00	s	METAL, CHIP 10K 5% 1/10W
R66	1-216-073-00	s	METAL, CHIP 10K 5% 1/10W
R67	1-216-073-00	s	METAL, CHIP 10K 5% 1/10W
R68	1-216-073-00	s	METAL, CHIP 10K 5% 1/10W
R69	1-216-073-00	s	METAL, CHIP 10K 5% 1/10W
R70	1-216-073-00	s	METAL, CHIP 10K 5% 1/10W
R71	1-216-073-00	s	METAL, CHIP 10K 5% 1/10W
R72	1-216-073-00	s	METAL, CHIP 10K 5% 1/10W
R73	1-216-073-00	s	METAL, CHIP 10K 5% 1/10W
R74	1-216-073-00	s	METAL, CHIP 10K 5% 1/10W
R75	1-216-073-00	s	METAL, CHIP 10K 5% 1/10W
R76	1-216-073-00	s	METAL, CHIP 10K 5% 1/10W
R77	1-216-073-00	s	METAL, CHIP 10K 5% 1/10W
R78	1-216-073-00	s	METAL, CHIP 10K 5% 1/10W
R79	1-216-073-00	s	METAL, CHIP 10K 5% 1/10W
R80	1-216-073-00	s	METAL, CHIP 10K 5% 1/10W
R81	1-216-073-00	s	METAL, CHIP 10K 5% 1/10W
R82	1-216-073-00	s	METAL, CHIP 10K 5% 1/10W
R83	1-216-073-00	s	METAL, CHIP 10K 5% 1/10W
R84	1-216-073-00	s	METAL, CHIP 10K 5% 1/10W
R85	1-216-073-00	s	METAL, CHIP 10K 5% 1/10W
R86	1-216-097-91	s	METAL 100K 5% 1/10W
R87	1-216-097-91	s	METAL 100K 5% 1/10W
R88	1-216-097-91	s	METAL 100K 5% 1/10W
R89	1-216-097-91	s	METAL 100K 5% 1/10W
R90	1-216-097-91	s	METAL 100K 5% 1/10W
R91	1-216-097-91	s	METAL 100K 5% 1/10W
R92	1-216-097-91	s	METAL 100K 5% 1/10W
R93	1-216-097-91	s	METAL 100K 5% 1/10W
R94	1-216-063-91	s	METAL 3.9K 5% 1/10W
R95	1-216-063-91	s	METAL 3.9K 5% 1/10W
R96	1-216-063-91	s	METAL 3.9K 5% 1/10W
R97	1-216-063-91	s	METAL 3.9K 5% 1/10W
RV1	1-241-874-11	s	RES, VAR, CARBON 10K
RV2	1-241-874-11	s	RES, VAR, CARBON 10K
RV3	1-241-874-11	s	RES, VAR, CARBON 10K
RV4	1-241-874-11	s	RES, VAR, CARBON 10K
RV5	1-223-547-11	s	RES, VAR, CARBON 10K
RV6	1-223-547-11	s	RES, VAR, CARBON 10K
RV7	1-241-874-11	s	RES, VAR, CARBON 10K
RV8	1-223-547-11	s	RES, VAR, CARBON 10K
RV9	1-237-039-11	s	RES, ADJ, METAL 100K
RV10	1-237-039-11	s	RES, ADJ, METAL 100K

(SW-892 BOARD)

Ref. No. or Q'ty	Part No.	SP	Description
RV11	1-237-039-11	s	RES, ADJ, METAL 100K
S1	1-570-985-11	s	SWITCH, TOGGLE
S2	1-570-985-11	s	SWITCH, TOGGLE
S3	1-570-984-11	s	SWITCH, TOGGLE
S4	1-570-985-11	s	SWITCH, TOGGLE
S5	1-570-985-11	s	SWITCH, TOGGLE
S6	1-571-396-11	s	SWITCH, TOGGLE
S7	1-570-984-11	s	SWITCH, TOGGLE
S8	1-570-984-11	s	SWITCH, TOGGLE
S9	1-570-984-11	s	SWITCH, TOGGLE
S10	1-771-111-21	s	SWITCH, PUSH
S11	1-771-111-21	s	SWITCH, PUSH
S12	1-570-598-11	s	SWITCH, DIP 4-CKT
S13	1-570-984-11	s	SWITCH, TOGGLE
S14	1-771-111-11	s	SWITCH, PUSH
S15	1-771-111-11	s	SWITCH, PUSH
W1	1-957-739-11	o	HARNESS, SUB (PANEL)

SUPPLIED ACCESSORIES

Ref. No. or Q'ty	Part No.	SP	Description
1pc	3-859-857-01	o	MANUAL, INSTRUCTION
1pc	7-700-736-04	s	WRENCH, L-SHAPED HEX. (2.5MM)

6-3-3. DXBK-701

SDI-44 BOARD

Ref. No. or Q'ty	Part No.	SP	Description
1pc	2-251-622-01	o	LEVER, PC BOARD
1pc	7-682-903-01	s	SCREW +PWH 3X5
3pcs	3-719-381-21	s	SCREW (M2X6)
C101	1-126-391-11	s	ELECT 47uF 20% 6.3V
C103	1-113-991-11	s	TANTALUM, CHIP 33uF 20% 16V
C105	1-104-913-11	s	TANTALUM, CHIP 10uF 20% 16V
C107	1-113-682-11	s	TANTALUM, CHIP 33uF 20% 10V
C108	1-164-156-11	s	CERAMIC, CHIP 0.1uF 25V
C110	1-113-682-11	s	TANTALUM, CHIP 33uF 20% 10V
C112	1-164-156-11	s	CERAMIC, CHIP 0.1uF 25V
C114	1-164-156-11	s	CERAMIC, CHIP 0.1uF 25V
C115	1-164-156-11	s	CERAMIC, CHIP 0.1uF 25V
C116	1-104-851-11	s	TANTALUM, CHIP 10uF 20% 10V
C117	1-113-682-11	s	TANTALUM, CHIP 33uF 20% 10V
C119	1-164-156-11	s	CERAMIC, CHIP 0.1uF 25V
C120	1-127-491-00	s	ELECT 22uF 20% 10V
C121	1-164-156-11	s	CERAMIC, CHIP 0.1uF 25V
C203	1-113-991-11	s	TANTALUM, CHIP 33uF 20% 16V
C204	1-113-991-11	s	TANTALUM, CHIP 33uF 20% 16V
C205	1-126-391-11	s	ELECT 47uF 20% 6.3V
C206	1-126-391-11	s	ELECT 47uF 20% 6.3V
C207	1-165-176-11	s	CERAMIC, CHIP 0.047uF 10% 16V
C208	1-165-176-11	s	CERAMIC, CHIP 0.047uF 10% 16V
C209	1-104-913-11	s	TANTALUM, CHIP 10uF 20% 16V
C210	1-104-913-11	s	TANTALUM, CHIP 10uF 20% 16V
C211	1-110-569-11	s	TANTALUM, CHIP 47uF 20% 6.3V
C212	1-104-913-11	s	TANTALUM, CHIP 10uF 20% 16V
C213	1-104-913-11	s	TANTALUM, CHIP 10uF 20% 16V
C216	1-165-176-11	s	CERAMIC, CHIP 0.047uF 10% 16V
C217	1-165-176-11	s	CERAMIC, CHIP 0.047uF 10% 16V
C218	1-113-682-11	s	TANTALUM, CHIP 33uF 20% 10V
C219	1-113-682-11	s	TANTALUM, CHIP 33uF 20% 10V
C220	1-113-981-11	s	TANTALUM, CHIP 22uF 20% 20V
C221	1-113-981-11	s	TANTALUM, CHIP 22uF 20% 20V
C223	1-113-981-11	s	TANTALUM, CHIP 22uF 20% 20V
C224	1-135-180-21	s	TANTALUM, CHIP 33uF 10% 10V
C225	1-135-180-21	s	TANTALUM, CHIP 33uF 10% 10V
C226	1-104-852-11	s	TANTALUM, CHIP 22uF 20% 10V
C227	1-164-315-11	s	CERAMIC, CHIP 470PF 5% 50V
C228	1-164-227-11	s	CERAMIC, CHIP 0.022uF 10% 25V
C229	1-164-227-11	s	CERAMIC, CHIP 0.022uF 10% 25V
C230	1-164-315-11	s	CERAMIC, CHIP 470PF 5% 50V
C231	1-113-981-11	s	TANTALUM, CHIP 22uF 20% 20V
C232	1-162-970-11	s	CERAMIC, CHIP 0.01uF 10% 25V
C233	1-164-315-11	s	CERAMIC, CHIP 470PF 5% 50V
C234	1-104-852-11	s	TANTALUM, CHIP 22uF 20% 10V
C235	1-162-970-11	s	CERAMIC, CHIP 0.01uF 10% 25V
C236	1-162-970-11	s	CERAMIC, CHIP 0.01uF 10% 25V
C237	1-162-970-11	s	CERAMIC, CHIP 0.01uF 10% 25V
C238	1-127-491-00	s	ELECT 22uF 20% 10V
C239	1-164-156-11	s	CERAMIC, CHIP 0.1uF 25V
C301	1-104-851-11	s	TANTALUM, CHIP 10uF 20% 10V
C302	1-162-970-11	s	CERAMIC, CHIP 0.01uF 10% 25V
C303	1-162-970-11	s	CERAMIC, CHIP 0.01uF 10% 25V
C304	1-162-970-11	s	CERAMIC, CHIP 0.01uF 10% 25V
C305	1-162-970-11	s	CERAMIC, CHIP 0.01uF 10% 25V
C306	1-162-970-11	s	CERAMIC, CHIP 0.01uF 10% 25V
C307	1-164-156-11	s	CERAMIC, CHIP 0.1uF 25V

(SDI-44 BOARD)

Ref. No. or Q'ty	Part No.	SP	Description
C310	1-164-156-11	s	CERAMIC, CHIP 0.1uF 25V
C311	1-164-156-11	s	CERAMIC, CHIP 0.1uF 25V
C312	1-164-156-11	s	CERAMIC, CHIP 0.1uF 25V
C313	1-164-156-11	s	CERAMIC, CHIP 0.1uF 25V
C314	1-164-156-11	s	CERAMIC, CHIP 0.1uF 25V
C315	1-111-253-11	s	TANTALUM 100uF 20% 6.3V
C316	1-164-156-11	s	CERAMIC, CHIP 0.1uF 25V
C317	1-110-569-11	s	TANTALUM, CHIP 47uF 20% 6.3V
C318	1-164-156-11	s	CERAMIC, CHIP 0.1uF 25V
C319	1-110-569-11	s	TANTALUM, CHIP 47uF 20% 6.3V
C320	1-164-156-11	s	CERAMIC, CHIP 0.1uF 25V
C321	1-111-253-11	s	TANTALUM 100uF 20% 6.3V
C322	1-164-156-11	s	CERAMIC, CHIP 0.1uF 25V
C323	1-110-569-11	s	TANTALUM, CHIP 47uF 20% 6.3V
C324	1-164-156-11	s	CERAMIC, CHIP 0.1uF 25V
C325	1-110-569-11	s	TANTALUM, CHIP 47uF 20% 6.3V
C326	1-164-156-11	s	CERAMIC, CHIP 0.1uF 25V
C327	1-111-253-11	s	TANTALUM 100uF 20% 6.3V
C328	1-164-156-11	s	CERAMIC, CHIP 0.1uF 25V
C329	1-110-569-11	s	TANTALUM, CHIP 47uF 20% 6.3V
C330	1-164-156-11	s	CERAMIC, CHIP 0.1uF 25V
C334	1-164-156-11	s	CERAMIC, CHIP 0.1uF 25V
C335	1-164-156-11	s	CERAMIC, CHIP 0.1uF 25V
C401	1-164-156-11	s	CERAMIC, CHIP 0.1uF 25V
C402	1-104-851-11	s	TANTALUM, CHIP 10uF 20% 10V
C404	1-164-156-11	s	CERAMIC, CHIP 0.1uF 25V
C405	1-162-957-11	s	CERAMIC, CHIP 220PF 5% 50V
C406	1-164-156-11	s	CERAMIC, CHIP 0.1uF 25V
C407	1-164-156-11	s	CERAMIC, CHIP 0.1uF 25V
C409	1-164-156-11	s	CERAMIC, CHIP 0.1uF 25V
C410	1-104-851-11	s	TANTALUM, CHIP 10uF 20% 10V
C411	1-162-970-11	s	CERAMIC, CHIP 0.01uF 10% 25V
C412	1-104-851-11	s	TANTALUM, CHIP 10uF 20% 10V
C413	1-104-851-11	s	TANTALUM, CHIP 10uF 20% 10V
C414	1-164-156-11	s	CERAMIC, CHIP 0.1uF 25V
C415	1-164-156-11	s	CERAMIC, CHIP 0.1uF 25V
C416	1-104-851-11	s	TANTALUM, CHIP 10uF 20% 10V
C417	1-162-970-11	s	CERAMIC, CHIP 0.01uF 10% 25V
C418	1-162-927-11	s	CERAMIC, CHIP 100PF 5% 50V
C419	1-104-851-11	s	TANTALUM, CHIP 10uF 20% 10V
C420	1-162-970-11	s	CERAMIC, CHIP 0.01uF 10% 25V
C421	1-164-156-11	s	CERAMIC, CHIP 0.1uF 25V
C422	1-164-156-11	s	CERAMIC, CHIP 0.1uF 25V
C502	1-164-156-11	s	CERAMIC, CHIP 0.1uF 25V
C503	1-162-964-11	s	CERAMIC, CHIP 0.001uF 10% 50V
C504	1-126-405-11	s	ELECT, CHIP 10uF 20% 50V
C505	1-164-156-11	s	CERAMIC, CHIP 0.1uF 25V
C506	1-104-851-11	s	TANTALUM, CHIP 10uF 20% 10V
C507	1-164-156-11	s	CERAMIC, CHIP 0.1uF 25V
C508	1-104-851-11	s	TANTALUM, CHIP 10uF 20% 10V
C518	1-164-156-11	s	CERAMIC, CHIP 0.1uF 25V
C520	1-162-918-11	s	CERAMIC, CHIP 18PF 5% 50V
C522	1-162-970-11	s	CERAMIC, CHIP 0.01uF 10% 25V
C523	1-162-970-11	s	CERAMIC, CHIP 0.01uF 10% 25V
C524	1-162-970-11	s	CERAMIC, CHIP 0.01uF 10% 25V
C525	1-162-970-11	s	CERAMIC, CHIP 0.01uF 10% 25V
C526	1-162-970-11	s	CERAMIC, CHIP 0.01uF 10% 25V
C601	1-104-852-11	s	TANTALUM, CHIP 22uF 20% 10V
C602	1-162-970-11	s	CERAMIC, CHIP 0.01uF 10% 25V

(SDI-44 BOARD)

Ref. No. or Q'ty	Part No.	SP	Description
C603	1-162-919-11	s	CERAMIC, CHIP 22PF 5% 50V
C604	1-162-919-11	s	CERAMIC, CHIP 22PF 5% 50V
C605	1-104-852-11	s	TANTALUM, CHIP 22uF 20% 10V
C606	1-162-970-11	s	CERAMIC, CHIP 0.01uF 10% 25V
C607	1-104-851-11	s	TANTALUM, CHIP 10uF 20% 10V
C608	1-165-176-11	s	CERAMIC, CHIP 0.047uF 10% 16V
C609	1-104-851-11	s	TANTALUM, CHIP 10uF 20% 10V
C610	1-165-176-11	s	CERAMIC, CHIP 0.047uF 10% 16V
C611	1-162-970-11	s	CERAMIC, CHIP 0.01uF 10% 25V
C703	1-164-156-11	s	CERAMIC, CHIP 0.1uF 25V
C704	1-164-156-11	s	CERAMIC, CHIP 0.1uF 25V
C716	1-164-156-11	s	CERAMIC, CHIP 0.1uF 25V
C719	1-162-907-11	s	CERAMIC, CHIP 2PF 50V
C720	1-164-156-11	s	CERAMIC, CHIP 0.1uF 25V
C721	1-162-907-11	s	CERAMIC, CHIP 2PF 50V
C722	1-164-156-11	s	CERAMIC, CHIP 0.1uF 25V
C723	1-164-156-11	s	CERAMIC, CHIP 0.1uF 25V
C724	1-164-156-11	s	CERAMIC, CHIP 0.1uF 25V
C725	1-104-851-11	s	TANTALUM, CHIP 10uF 20% 10V
C726	1-104-851-11	s	TANTALUM, CHIP 10uF 20% 10V
C727	1-164-156-11	s	CERAMIC, CHIP 0.1uF 25V
C728	1-164-156-11	s	CERAMIC, CHIP 0.1uF 25V
C729	1-164-156-11	s	CERAMIC, CHIP 0.1uF 25V
C730	1-164-156-11	s	CERAMIC, CHIP 0.1uF 25V
C731	1-164-156-11	s	CERAMIC, CHIP 0.1uF 25V
C732	1-113-682-11	s	TANTALUM, CHIP 33uF 20% 10V
C733	1-164-156-11	s	CERAMIC, CHIP 0.1uF 25V
C734	1-164-156-11	s	CERAMIC, CHIP 0.1uF 25V
C735	1-164-156-11	s	CERAMIC, CHIP 0.1uF 25V
C736	1-162-915-11	s	CERAMIC, CHIP 10PF 50V
C737	1-164-156-11	s	CERAMIC, CHIP 0.1uF 25V
C738	1-164-156-11	s	CERAMIC, CHIP 0.1uF 25V
C739	1-164-156-11	s	CERAMIC, CHIP 0.1uF 25V
C740	1-164-156-11	s	CERAMIC, CHIP 0.1uF 25V
C741	1-104-851-11	s	TANTALUM, CHIP 10uF 20% 10V
C742	1-164-156-11	s	CERAMIC, CHIP 0.1uF 25V
C743	1-164-156-11	s	CERAMIC, CHIP 0.1uF 25V
C745	1-104-851-11	s	TANTALUM, CHIP 10uF 20% 10V
C746	1-162-970-11	s	CERAMIC, CHIP 0.01uF 10% 25V
C747	1-162-970-11	s	CERAMIC, CHIP 0.01uF 10% 25V
C748	1-162-911-11	s	CERAMIC, CHIP 6PF 50V
C814	1-162-957-11	s	CERAMIC, CHIP 220PF 5% 50V
C815	1-135-070-00	s	TANTALUM, CHIP 0.1uF 10% 35V
C816	1-162-957-11	s	CERAMIC, CHIP 220PF 5% 50V
C817	1-113-991-11	s	TANTALUM, CHIP 33uF 20% 16V
C824	1-162-957-11	s	CERAMIC, CHIP 220PF 5% 50V
C826	1-104-851-11	s	TANTALUM, CHIP 10uF 20% 10V
C828	1-162-957-11	s	CERAMIC, CHIP 220PF 5% 50V
C829	1-164-156-11	s	CERAMIC, CHIP 0.1uF 25V
C830	1-162-917-11	s	CERAMIC, CHIP 15PF 5% 50V
C831	1-162-970-11	s	CERAMIC, CHIP 0.01uF 10% 25V
C832	1-135-177-21	s	TANTALUM, CHIP 1uF 10% 25V
C834	1-165-176-11	s	CERAMIC, CHIP 0.047uF 10% 16V
C835	1-104-852-11	s	TANTALUM, CHIP 22uF 20% 10V
C836	1-162-970-11	s	CERAMIC, CHIP 0.01uF 10% 25V
C837	1-164-315-11	s	CERAMIC, CHIP 470PF 5% 50V
C838	1-162-970-11	s	CERAMIC, CHIP 0.01uF 10% 25V
C839	1-104-852-11	s	TANTALUM, CHIP 22uF 20% 10V
C840	1-162-970-11	s	CERAMIC, CHIP 0.01uF 10% 25V

(SDI-44 BOARD)

Ref. No. or Q'ty	Part No.	SP	Description
C841	1-162-970-11	s	CERAMIC, CHIP 0.01uF 10% 25V
C842	1-162-970-11	s	CERAMIC, CHIP 0.01uF 10% 25V
C843	1-164-156-11	s	CERAMIC, CHIP 0.1uF 25V
C844	1-104-852-11	s	TANTALUM, CHIP 22uF 20% 10V
C845	1-162-970-11	s	CERAMIC, CHIP 0.01uF 10% 25V
C846	1-164-156-11	s	CERAMIC, CHIP 0.1uF 25V
C847	1-104-852-11	s	TANTALUM, CHIP 22uF 20% 10V
C848	1-164-156-11	s	CERAMIC, CHIP 0.1uF 25V
C849	1-135-210-11	s	TANTALUM, CHIP 4.7uF 20% 10V
C850	1-135-210-11	s	TANTALUM, CHIP 4.7uF 20% 10V
C851	1-162-957-11	s	CERAMIC, CHIP 220PF 5% 50V
C901	1-164-156-11	s	CERAMIC, CHIP 0.1uF 25V
C902	1-164-156-11	s	CERAMIC, CHIP 0.1uF 25V
C903	1-162-927-11	s	CERAMIC, CHIP 100PF 5% 50V
C904	1-162-927-11	s	CERAMIC, CHIP 100PF 5% 50V
C905	1-104-851-11	s	TANTALUM, CHIP 10uF 20% 10V
C906	1-104-851-11	s	TANTALUM, CHIP 10uF 20% 10V
C910	1-135-179-21	s	TANTALUM, CHIP 2.2uF 10% 16V
C911	1-135-179-21	s	TANTALUM, CHIP 2.2uF 10% 16V
C912	1-164-156-11	s	CERAMIC, CHIP 0.1uF 25V
C913	1-164-156-11	s	CERAMIC, CHIP 0.1uF 25V
C914	1-164-156-11	s	CERAMIC, CHIP 0.1uF 25V
C915	1-164-156-11	s	CERAMIC, CHIP 0.1uF 25V
C916	1-162-927-11	s	CERAMIC, CHIP 100PF 5% 50V
C917	1-162-927-11	s	CERAMIC, CHIP 100PF 5% 50V
C918	1-162-927-11	s	CERAMIC, CHIP 100PF 5% 50V
C919	1-162-927-11	s	CERAMIC, CHIP 100PF 5% 50V
C920	1-162-969-11	s	CERAMIC, CHIP 0.0068uF 10% 25V
C921	1-162-969-11	s	CERAMIC, CHIP 0.0068uF 10% 25V
C923	1-104-851-11	s	TANTALUM, CHIP 10uF 20% 10V
C925	1-104-913-11	s	TANTALUM, CHIP 10uF 20% 16V
C927	1-164-156-11	s	CERAMIC, CHIP 0.1uF 25V
C929	1-164-156-11	s	CERAMIC, CHIP 0.1uF 25V
C930	1-104-913-11	s	TANTALUM, CHIP 10uF 20% 16V
C931	1-164-156-11	s	CERAMIC, CHIP 0.1uF 25V
C932	1-164-156-11	s	CERAMIC, CHIP 0.1uF 25V
C933	1-164-156-11	s	CERAMIC, CHIP 0.1uF 25V
C934	1-162-927-11	s	CERAMIC, CHIP 100PF 5% 50V
C935	1-162-927-11	s	CERAMIC, CHIP 100PF 5% 50V
C936	1-113-985-11	s	TANTALUM, CHIP 10uF 20% 20V
C937	1-113-985-11	s	TANTALUM, CHIP 10uF 20% 20V
C938	1-164-156-11	s	CERAMIC, CHIP 0.1uF 25V
C939	1-164-156-11	s	CERAMIC, CHIP 0.1uF 25V
C940	1-135-179-21	s	TANTALUM, CHIP 2.2uF 10% 16V
C941	1-135-179-21	s	TANTALUM, CHIP 2.2uF 10% 16V
C942	1-162-964-11	s	CERAMIC, CHIP 0.001uF 10% 50V
C943	1-164-156-11	s	CERAMIC, CHIP 0.1uF 25V
C944	1-162-970-11	s	CERAMIC, CHIP 0.01uF 10% 25V
C945	1-164-156-11	s	CERAMIC, CHIP 0.1uF 25V
C1043	1-113-985-11	s	TANTALUM, CHIP 10uF 20% 20V
C1061	1-164-156-11	s	CERAMIC, CHIP 0.1uF 25V
C1063	1-164-156-11	s	CERAMIC, CHIP 0.1uF 25V
C1100	1-164-156-11	s	CERAMIC, CHIP 0.1uF 25V
C1102	1-104-851-11	s	TANTALUM, CHIP 10uF 20% 10V
C1103	1-164-156-11	s	CERAMIC, CHIP 0.1uF 25V
C1104	1-104-852-11	s	TANTALUM, CHIP 22uF 20% 10V
C1105	1-104-851-11	s	TANTALUM, CHIP 10uF 20% 10V
C1106	1-164-156-11	s	CERAMIC, CHIP 0.1uF 25V
C1107	1-164-156-11	s	CERAMIC, CHIP 0.1uF 25V

(SDI-44 BOARD)

Ref. No. or Q'ty	Part No.	SP	Description
C1108	1-164-156-11	s	CERAMIC, CHIP 0.1uF 25V
C1109	1-104-852-11	s	TANTALUM, CHIP 22uF 20% 10V
C1111	1-164-156-11	s	CERAMIC, CHIP 0.1uF 25V
C1113	1-104-851-11	s	TANTALUM, CHIP 10uF 20% 10V
C1114	1-164-156-11	s	CERAMIC, CHIP 0.1uF 25V
C1115	1-104-852-11	s	TANTALUM, CHIP 22uF 20% 10V
C1116	1-104-851-11	s	TANTALUM, CHIP 10uF 20% 10V
C1117	1-164-156-11	s	CERAMIC, CHIP 0.1uF 25V
C1118	1-164-156-11	s	CERAMIC, CHIP 0.1uF 25V
C1119	1-164-156-11	s	CERAMIC, CHIP 0.1uF 25V
C1120	1-104-852-11	s	TANTALUM, CHIP 22uF 20% 10V
C1121	1-164-156-11	s	CERAMIC, CHIP 0.1uF 25V
C1122	1-164-156-11	s	CERAMIC, CHIP 0.1uF 25V
C1124	1-104-851-11	s	TANTALUM, CHIP 10uF 20% 10V
C1125	1-164-156-11	s	CERAMIC, CHIP 0.1uF 25V
C1126	1-104-852-11	s	TANTALUM, CHIP 22uF 20% 10V
C1127	1-104-851-11	s	TANTALUM, CHIP 10uF 20% 10V
C1128	1-164-156-11	s	CERAMIC, CHIP 0.1uF 25V
C1129	1-164-156-11	s	CERAMIC, CHIP 0.1uF 25V
C1130	1-164-156-11	s	CERAMIC, CHIP 0.1uF 25V
C1131	1-104-852-11	s	TANTALUM, CHIP 22uF 20% 10V
C1132	1-164-156-11	s	CERAMIC, CHIP 0.1uF 25V
C1133	1-164-156-11	s	CERAMIC, CHIP 0.1uF 25V
C1134	1-164-156-11	s	CERAMIC, CHIP 0.1uF 25V
C1200	1-164-156-11	s	CERAMIC, CHIP 0.1uF 25V
C1201	1-164-156-11	s	CERAMIC, CHIP 0.1uF 25V
C1300	1-104-851-11	s	TANTALUM, CHIP 10uF 20% 10V
C1301	1-104-851-11	s	TANTALUM, CHIP 10uF 20% 10V
C1302	1-165-176-11	s	CERAMIC, CHIP 0.047uF 10% 16V
C1303	1-165-176-11	s	CERAMIC, CHIP 0.047uF 10% 16V
C1305	1-162-917-11	s	CERAMIC, CHIP 15PF 5% 50V
C1313	1-104-851-11	s	TANTALUM, CHIP 10uF 20% 10V
C1316	1-104-851-11	s	TANTALUM, CHIP 10uF 20% 10V
C1317	1-164-156-11	s	CERAMIC, CHIP 0.1uF 25V
C1319	1-104-851-11	s	TANTALUM, CHIP 10uF 20% 10V
C1320	1-165-176-11	s	CERAMIC, CHIP 0.047uF 10% 16V
C1321	1-164-156-11	s	CERAMIC, CHIP 0.1uF 25V
C1400	1-104-851-11	s	TANTALUM, CHIP 10uF 20% 10V
C1401	1-104-851-11	s	TANTALUM, CHIP 10uF 20% 10V
C1402	1-165-176-11	s	CERAMIC, CHIP 0.047uF 10% 16V
C1403	1-165-176-11	s	CERAMIC, CHIP 0.047uF 10% 16V
C1404	1-104-851-11	s	TANTALUM, CHIP 10uF 20% 10V
C1409	1-162-907-11	s	CERAMIC, CHIP 2PF 50V
C1410	1-162-915-11	s	CERAMIC, CHIP 10PF 50V
C1412	1-162-915-11	s	CERAMIC, CHIP 10PF 50V
C1414	1-104-851-11	s	TANTALUM, CHIP 10uF 20% 10V
C1415	1-104-851-11	s	TANTALUM, CHIP 10uF 20% 10V
C1416	1-164-156-11	s	CERAMIC, CHIP 0.1uF 25V
C1417	1-162-919-11	s	CERAMIC, CHIP 22PF 5% 50V
C1418	1-104-851-11	s	TANTALUM, CHIP 10uF 20% 10V
C1419	1-165-176-11	s	CERAMIC, CHIP 0.047uF 10% 16V
C1421	1-164-156-11	s	CERAMIC, CHIP 0.1uF 25V
C1500	1-104-851-11	s	TANTALUM, CHIP 10uF 20% 10V
C1501	1-104-851-11	s	TANTALUM, CHIP 10uF 20% 10V
C1502	1-165-176-11	s	CERAMIC, CHIP 0.047uF 10% 16V
C1503	1-165-176-11	s	CERAMIC, CHIP 0.047uF 10% 16V
C1504	1-104-851-11	s	TANTALUM, CHIP 10uF 20% 10V
C1509	1-162-907-11	s	CERAMIC, CHIP 2PF 50V
C1510	1-162-915-11	s	CERAMIC, CHIP 10PF 50V

(SDI-44 BOARD)

Ref. No. or Q'ty	Part No.	SP	Description
C1512	1-162-915-11	s	CERAMIC, CHIP 10PF 50V
C1514	1-104-851-11	s	TANTALUM, CHIP 10uF 20% 10V
C1515	1-104-851-11	s	TANTALUM, CHIP 10uF 20% 10V
C1516	1-164-156-11	s	CERAMIC, CHIP 0.1uF 25V
C1517	1-162-919-11	s	CERAMIC, CHIP 22PF 5% 50V
C1518	1-104-851-11	s	TANTALUM, CHIP 10uF 20% 10V
C1519	1-165-176-11	s	CERAMIC, CHIP 0.047uF 10% 16V
C1521	1-164-156-11	s	CERAMIC, CHIP 0.1uF 25V
C1600	1-104-851-11	s	TANTALUM, CHIP 10uF 20% 10V
C1601	1-164-156-11	s	CERAMIC, CHIP 0.1uF 25V
C1602	1-104-851-11	s	TANTALUM, CHIP 10uF 20% 10V
C1603	1-164-156-11	s	CERAMIC, CHIP 0.1uF 25V
C1604	1-104-852-11	s	TANTALUM, CHIP 22uF 20% 10V
C1605	1-164-156-11	s	CERAMIC, CHIP 0.1uF 25V
C1606	1-164-156-11	s	CERAMIC, CHIP 0.1uF 25V
C1607	1-104-852-11	s	TANTALUM, CHIP 22uF 20% 10V
C1608	1-164-156-11	s	CERAMIC, CHIP 0.1uF 25V
C1609	1-164-156-11	s	CERAMIC, CHIP 0.1uF 25V
C1610	1-104-851-11	s	TANTALUM, CHIP 10uF 20% 10V
C1611	1-162-970-11	s	CERAMIC, CHIP 0.01uF 10% 25V
CN2	1-750-880-11	s	RECEPTACLE, COAXIAL CONNECTOR
CN3	1-750-880-11	s	RECEPTACLE, COAXIAL CONNECTOR
CN4	1-770-469-21	o	PIN, CONNECTOR (PC BOARD) 2P
CNI602	1-526-659-00	o	SOCKET, IC 28P
D101	8-719-029-62	s	DIODE RD3.9UH-T1
D201	8-719-981-49	s	DIODE GL3ED8
D202	8-719-029-67	s	DIODE RD5.6UJN-T1
D203	8-719-029-67	s	DIODE RD5.6UJN-T1
D204	8-719-029-75	s	DIODE RD12UJN-T1
D206	8-719-029-67	s	DIODE RD5.6UJN-T1
D208	8-719-029-62	s	DIODE RD3.9UH-T1
D209	8-719-029-62	s	DIODE RD3.9UH-T1
D211	8-719-029-55	s	DIODE RD2.0UH-T1
D212	8-719-029-62	s	DIODE RD3.9UH-T1
D214	8-719-023-53	s	DIODE EA30QS04-F
D215	8-719-023-53	s	DIODE EA30QS04-F
D401	8-719-029-55	s	DIODE RD2.0UH-T1
D501	8-719-800-76	s	DIODE 1SS226
D601	8-719-981-49	s	DIODE GL3ED8
D802	8-719-800-76	s	DIODE 1SS226
D902	8-719-988-82	s	DIODE RB715F-T106
D903	8-719-989-08	s	DIODE RB717F-T106
D904	8-719-988-82	s	DIODE RB715F-T106
D905	8-719-989-08	s	DIODE RB717F-T106
FB702	1-543-309-21	s	BEAD, FERRITE
FB703	1-543-309-21	s	BEAD, FERRITE
FB704	1-543-309-21	s	BEAD, FERRITE
FB705	1-543-309-21	s	BEAD, FERRITE
FL1300	1-233-707-21	s	FILTER, LOW PASS
FL1400	1-233-345-21	s	FILTER, LOW PASS (5.5MHZ)
FL1500	1-233-345-21	s	FILTER, LOW PASS (5.5MHZ)
IC101	8-759-260-55	s	IC TLC272CPW-E05
IC102	8-759-973-71	s	IC TL7705CPS-B
IC201	8-759-082-53	s	IC TLC274CPW
IC202	8-759-274-67	s	IC LM4040BIM3X-5.0
IC203	8-759-260-57	s	IC TL1451ACPW-E05
IC301	8-759-524-52	s	IC TC74VHC574FT(EL)

(SDI-44 BOARD)

Ref. No. or Q'ty	Part No.	SP	Description
IC302	8-759-524-52	s	IC TC74VHC574FT(EL)
IC303	8-759-524-52	s	IC TC74VHC574FT(EL)
IC304	8-759-524-52	s	IC TC74VHC574FT(EL)
IC305	8-759-524-52	s	IC TC74VHC574FT(EL)
IC306	8-759-491-46	s	IC TC74VHCT04AFT(EL)
IC308	8-752-381-65	o	IC CXD606-101R
IC309	8-759-182-95	s	IC HD151015T
IC310	8-759-491-46	s	IC TC74VHCT04AFT(EL)
IC311	8-759-491-46	s	IC TC74VHCT04AFT(EL)
IC312	8-759-196-96	s	IC TC7SH08FU-TE85R
IC401	8-759-049-96	s	IC SN74HC32APW-E05
IC403	8-759-523-95	s	IC TC74VHC74FT(EL)
IC404	8-759-519-12	s	IC CXD8281Q
IC405	8-759-523-04	s	IC TC74HC4538AFT(EL)
IC406	8-759-524-52	s	IC TC74VHC574FT(EL)
IC407	8-759-524-52	s	IC TC74VHC574FT(EL)
IC408	8-759-260-55	s	IC TLC272CPW-E05
IC409	8-759-524-52	s	IC TC74VHC574FT(EL)
IC410	8-759-524-52	s	IC TC74VHC574FT(EL)
IC411	8-759-491-46	s	IC TC74VHCT04AFT(EL)
IC412	8-759-524-18	s	IC TC74VHC163FT(EL)
IC413	8-759-172-73	s	IC CXD8385Q
IC415	8-759-523-78	s	IC TC74VHC00FT(EL)
IC416	8-759-524-18	s	IC TC74VHC163FT(EL)
IC417	8-759-523-95	s	IC TC74VHC74FT(EL)
IC502	8-759-295-09	s	IC TLC2932IPW
IC503	8-759-030-16	s	IC MC34182M
IC504	8-759-058-58	s	IC TC7S04FU(TE85R)
IC506	8-759-058-64	s	IC TC7S32FU(TE85R)
IC509	8-759-524-18	s	IC TC74VHC163FT(EL)
IC510	8-759-524-18	s	IC TC74VHC163FT(EL)
IC511	8-759-524-18	s	IC TC74VHC163FT(EL)
IC512	8-759-523-95	s	IC TC74VHC74FT(EL)
IC513	8-759-524-18	s	IC TC74VHC163FT(EL)
IC514	8-759-524-18	s	IC TC74VHC163FT(EL)
IC515	8-759-524-18	s	IC TC74VHC163FT(EL)
IC601	8-759-090-84	s	IC HD6413308RF10
IC603	8-759-268-32	s	IC SN74HC595ADB-E05
IC604	8-759-268-32	s	IC SN74HC595ADB-E05
IC605	8-759-268-32	s	IC SN74HC595ADB-E05
IC606	8-759-058-58	s	IC TC7S04FU(TE85R)
IC607	8-759-058-58	s	IC TC7S04FU(TE85R)
IC608	8-759-086-41	s	IC X24C02S-3.0
IC610	8-759-064-36	s	IC MB88346BPFV
IC702	8-752-078-32	s	IC CXB1341R
IC703	8-759-524-52	s	IC TC74VHC574FT(EL)
IC704	8-759-524-52	s	IC TC74VHC574FT(EL)
IC706	8-759-491-46	s	IC TC74VHCT04AFT(EL)
IC807	8-759-239-58	s	IC TC74HC221AF
IC810	8-759-260-55	s	IC TLC272CPW-E05
IC811	8-759-239-58	s	IC TC74HC221AF
IC813	8-759-491-46	s	IC TC74VHCT04AFT(EL)
IC814	8-759-491-46	s	IC TC74VHCT04AFT(EL)
IC815	8-759-239-58	s	IC TC74HC221AF
IC816	8-759-523-95	s	IC TC74VHC74FT(EL)
IC817	8-759-524-19	s	IC TC74VHC164FT(EL)
IC818	8-759-524-19	s	IC TC74VHC164FT(EL)
IC819	8-759-524-19	s	IC TC74VHC164FT(EL)
IC820	8-759-524-19	s	IC TC74VHC164FT(EL)

(SDI-44 BOARD)

Ref. No. or Q'ty	Part No.	SP	Description
IC821	8-759-491-46	s	IC TC74VHCT04AFT(EL)
IC822	8-759-524-18	s	IC TC74VHC163FT(EL)
IC823	8-759-524-18	s	IC TC74VHC163FT(EL)
IC824	8-759-524-18	s	IC TC74VHC163FT(EL)
IC825	8-759-295-09	s	IC TLC2932IPW
IC826	8-759-523-78	s	IC TC74VHC00FT(EL)
IC827	8-759-523-96	s	IC TC74VHC86FT(EL)
IC828	8-759-523-95	s	IC TC74VHC74FT(EL)
IC901	8-759-278-58	s	IC NJM4558V-TE2
IC902	8-759-278-58	s	IC NJM4558V-TE2
IC903	8-759-278-58	s	IC NJM4558V-TE2
IC904	8-759-331-35	s	IC AK5340-VS-E1
IC905	8-759-523-97	s	IC TC74VHC123AFT(EL)
IC906	8-759-049-96	s	IC SN74HC32APW-E05
IC907	8-759-058-64	s	IC TC7S32FU(TE85R)
IC908	8-759-058-58	s	IC TC7S04FU(TE85R)
IC1007	8-752-376-32	s	IC CXD2310AR-T4
IC1008	8-752-376-32	s	IC CXD2310AR-T4
IC1009	8-752-376-32	s	IC CXD2310AR-T4
IC1010	8-759-173-16	s	IC TL062CPW
IC1011	8-759-173-16	s	IC TL062CPW
IC1012	8-759-173-16	s	IC TL062CPW
IC1200	8-759-987-27	s	IC LM1881M
IC1300	8-759-258-43	s	IC LT1253CS8-E2
IC1302	8-759-173-16	s	IC TL062CPW
IC1303	8-759-082-61	s	IC TC4W53FU
IC1400	8-759-173-16	s	IC TL062CPW
IC1401	8-759-082-61	s	IC TC4W53FU
IC1500	8-759-173-16	s	IC TL062CPW
IC1501	8-759-082-61	s	IC TC4W53FU
IC1600	8-752-376-32	s	IC CXD2310AR-T4
IC1601	8-759-523-94	s	IC TC74VHC32FT(EL)
IC1602	8-759-523-96	s	IC TC74VHC86FT(EL)
L101	1-414-529-21	s	INDUCTOR, CHIP 100uH
L103	1-412-029-11	s	INDUCTOR, CHIP 10uH
L201	1-414-529-21	s	INDUCTOR, CHIP 100uH
L202	1-414-529-21	s	INDUCTOR, CHIP 100uH
L203	1-414-529-21	s	INDUCTOR, CHIP 100uH
L204	1-424-674-11	s	INDUCTOR 22uH
L205	1-424-674-11	s	INDUCTOR 22uH
L301	1-412-029-11	s	INDUCTOR, CHIP 10uH
L302	1-412-029-11	s	INDUCTOR, CHIP 10uH
L304	1-412-029-11	s	INDUCTOR, CHIP 10uH
L401	1-412-030-11	s	INDUCTOR CHIP 22uH
L402	1-412-030-11	s	INDUCTOR CHIP 22uH
L403	1-412-030-11	s	INDUCTOR CHIP 22uH
L404	1-412-030-11	s	INDUCTOR CHIP 22uH
L501	1-412-031-11	s	INDUCTOR, CHIP 47uH
L502	1-412-030-11	s	INDUCTOR CHIP 22uH
L503	1-408-769-41	s	INDUCTOR, CHIP 2.2uH
L601	1-412-030-11	s	INDUCTOR CHIP 22uH
L602	1-412-030-11	s	INDUCTOR CHIP 22uH
L603	1-412-030-11	s	INDUCTOR CHIP 22uH
L701	1-412-030-11	s	INDUCTOR CHIP 22uH
L806	1-408-769-41	s	INDUCTOR, CHIP 2.2uH
L807	1-412-030-11	s	INDUCTOR CHIP 22uH
L809	1-412-030-11	s	INDUCTOR CHIP 22uH
L810	1-412-030-11	s	INDUCTOR CHIP 22uH

(SDI-44 BOARD)

Ref. No. or Q'ty	Part No.	SP	Description
L811	1-412-030-11	s	INDUCTOR CHIP 22uH
L812	1-412-030-11	s	INDUCTOR CHIP 22uH
L902	1-412-030-11	s	INDUCTOR CHIP 22uH
L903	1-412-030-11	s	INDUCTOR CHIP 22uH
L904	1-412-030-11	s	INDUCTOR CHIP 22uH
L905	1-412-030-11	s	INDUCTOR CHIP 22uH
L906	1-412-029-11	s	INDUCTOR, CHIP 10uH
L1013	1-412-030-11	s	INDUCTOR CHIP 22uH
L1014	1-412-030-11	s	INDUCTOR CHIP 22uH
L1015	1-412-030-11	s	INDUCTOR CHIP 22uH
L1016	1-412-030-11	s	INDUCTOR CHIP 22uH
L1017	1-412-030-11	s	INDUCTOR CHIP 22uH
L1018	1-412-030-11	s	INDUCTOR CHIP 22uH
L1019	1-412-030-11	s	INDUCTOR CHIP 22uH
L1300	1-412-030-11	s	INDUCTOR CHIP 22uH
L1301	1-412-030-11	s	INDUCTOR CHIP 22uH
L1302	1-412-030-11	s	INDUCTOR CHIP 22uH
L1400	1-412-030-11	s	INDUCTOR CHIP 22uH
L1401	1-412-030-11	s	INDUCTOR CHIP 22uH
L1402	1-412-030-11	s	INDUCTOR CHIP 22uH
L1500	1-412-030-11	s	INDUCTOR CHIP 22uH
L1501	1-412-030-11	s	INDUCTOR CHIP 22uH
L1502	1-412-030-11	s	INDUCTOR CHIP 22uH
L1600	1-412-030-11	s	INDUCTOR CHIP 22uH
L1601	1-412-030-11	s	INDUCTOR CHIP 22uH
L1602	1-412-030-11	s	INDUCTOR CHIP 22uH
Q101	8-729-101-07	s	TRANSISTOR 2SB798
Q202	8-729-117-32	s	TRANSISTOR 2SC4177
Q204	8-729-117-16	s	TRANSISTOR 2SA1611-M6
Q205	8-729-117-16	s	TRANSISTOR 2SA1611-M6
Q206	8-729-117-16	s	TRANSISTOR 2SA1611-M6
Q207	8-729-101-07	s	TRANSISTOR 2SB798
Q208	8-729-807-51	s	TRANSISTOR 2SD1623-S
Q209	8-729-101-07	s	TRANSISTOR 2SB798
Q210	8-729-101-07	s	TRANSISTOR 2SB798
Q214	8-729-117-32	s	TRANSISTOR 2SC4177
Q215	8-729-117-16	s	TRANSISTOR 2SA1611-M6
Q216	8-729-101-07	s	TRANSISTOR 2SB798
Q219	8-729-101-07	s	TRANSISTOR 2SB798
Q220	8-729-117-32	s	TRANSISTOR 2SC4177
Q221	8-729-117-16	s	TRANSISTOR 2SA1611-M6
Q401	8-729-101-07	s	TRANSISTOR 2SB798
Q601	8-729-117-32	s	TRANSISTOR 2SC4177
Q602	8-729-117-32	s	TRANSISTOR 2SC4177
Q703	8-729-105-68	s	TRANSISTOR 2SC3356-K
Q704	8-729-105-68	s	TRANSISTOR 2SC3356-K
Q705	8-729-105-68	s	TRANSISTOR 2SC3356-K
Q706	8-729-105-68	s	TRANSISTOR 2SC3356-K
Q1004	8-729-117-32	s	TRANSISTOR 2SC4177
Q1005	8-729-117-16	s	TRANSISTOR 2SA1611-M6
Q1006	8-729-117-32	s	TRANSISTOR 2SC4177
Q1007	8-729-117-16	s	TRANSISTOR 2SA1611-M6
Q1008	8-729-117-32	s	TRANSISTOR 2SC4177
Q1009	8-729-117-16	s	TRANSISTOR 2SA1611-M6
Q1300	8-729-143-07	s	TRANSISTOR 2SA1610-YY33
Q1311	8-729-117-32	s	TRANSISTOR 2SC4177
Q1400	8-729-117-32	s	TRANSISTOR 2SC4177
Q1401	8-729-117-32	s	TRANSISTOR 2SC4177

(SDI-44 BOARD)

Ref. No. or Q'ty	Part No.	SP	Description
Q1402	8-729-117-32	s	TRANSISTOR 2SC4177
Q1403	8-729-117-32	s	TRANSISTOR 2SC4177
Q1404	8-729-117-32	s	TRANSISTOR 2SC4177
Q1405	8-729-117-32	s	TRANSISTOR 2SC4177
Q1406	8-729-143-07	s	TRANSISTOR 2SA1610-YY33
Q1407	8-729-117-32	s	TRANSISTOR 2SC4177
Q1500	8-729-117-32	s	TRANSISTOR 2SC4177
Q1501	8-729-117-32	s	TRANSISTOR 2SC4177
Q1502	8-729-117-32	s	TRANSISTOR 2SC4177
Q1503	8-729-117-32	s	TRANSISTOR 2SC4177
Q1504	8-729-117-32	s	TRANSISTOR 2SC4177
Q1505	8-729-117-32	s	TRANSISTOR 2SC4177
Q1506	8-729-143-07	s	TRANSISTOR 2SA1610-YY33
Q1507	8-729-117-32	s	TRANSISTOR 2SC4177
R101	1-216-821-11	s	METAL, CHIP 1K 5% 1/16W
R103	1-218-879-11	s	METAL, CHIP 22K 0.50% 1/16W
R104	1-218-879-11	s	METAL, CHIP 22K 0.50% 1/16W
R105	1-218-879-11	s	METAL, CHIP 22K 0.50% 1/16W
R106	1-218-879-11	s	METAL, CHIP 22K 0.50% 1/16W
R109	1-216-845-11	s	METAL, CHIP 100K 5% 1/16W
R110	1-218-871-11	s	METAL, CHIP 10K 0.50% 1/16W
R116	1-216-833-91	s	METAL, CHIP 10K 5% 1/16W
R201	1-216-813-11	s	METAL, CHIP 220 5% 1/16W
R210	1-218-879-11	s	METAL, CHIP 22K 0.50% 1/16W
R211	1-218-879-11	s	METAL, CHIP 22K 0.50% 1/16W
R212	1-218-879-11	s	METAL, CHIP 22K 0.50% 1/16W
R214	1-218-879-11	s	METAL, CHIP 22K 0.50% 1/16W
R216	1-216-821-11	s	METAL, CHIP 1K 5% 1/16W
R217	1-216-821-11	s	METAL, CHIP 1K 5% 1/16W
R218	1-218-879-11	s	METAL, CHIP 22K 0.50% 1/16W
R219	1-216-809-11	s	METAL, CHIP 100 5% 1/16W
R220	1-218-879-11	s	METAL, CHIP 22K 0.50% 1/16W
R221	1-218-847-11	s	METAL, CHIP 1K 0.50% 1/16W
R222	1-216-821-11	s	METAL, CHIP 1K 5% 1/16W
R224	1-218-879-11	s	METAL, CHIP 22K 0.50% 1/16W
R226	1-216-821-11	s	METAL, CHIP 1K 5% 1/16W
R227	1-218-879-11	s	METAL, CHIP 22K 0.50% 1/16W
R228	1-218-879-11	s	METAL, CHIP 22K 0.50% 1/16W
R229	1-218-887-11	s	METAL, CHIP 47K 0.50% 1/16W
R230	1-218-881-11	s	METAL, CHIP 27K 0.50% 1/16W
R232	1-218-871-11	s	METAL, CHIP 10K 0.50% 1/16W
R233	1-218-883-11	s	METAL, CHIP 33K 0.50% 1/16W
R243	1-218-879-11	s	METAL, CHIP 22K 0.50% 1/16W
R244	1-218-887-11	s	METAL, CHIP 47K 0.50% 1/16W
R245	1-218-887-11	s	METAL, CHIP 47K 0.50% 1/16W
R246	1-218-887-11	s	METAL, CHIP 47K 0.50% 1/16W
R247	1-218-887-11	s	METAL, CHIP 47K 0.50% 1/16W
R248	1-218-871-11	s	METAL, CHIP 10K 0.50% 1/16W
R249	1-218-871-11	s	METAL, CHIP 10K 0.50% 1/16W
R250	1-218-871-11	s	METAL, CHIP 10K 0.50% 1/16W
R251	1-218-871-11	s	METAL, CHIP 10K 0.50% 1/16W
R252	1-218-865-11	s	METAL, CHIP 5.6K 0.50% 1/16W
R253	1-216-849-11	s	METAL, CHIP 220K 5% 1/16W
R254	1-218-863-11	s	METAL, CHIP 4.7K 0.50% 1/16W
R255	1-216-849-11	s	METAL, CHIP 220K 5% 1/16W
R256	1-218-863-11	s	METAL, CHIP 4.7K 0.50% 1/16W
R257	1-216-833-91	s	METAL, CHIP 10K 5% 1/16W
R258	1-218-855-11	s	METAL, CHIP 2.2K 0.50% 1/16W
R259	1-216-801-11	s	METAL, CHIP 22 5% 1/16W

(SDI-44 BOARD)

Ref. No. or Q'ty	Part No.	SP	Description
R260	1-216-801-11	s	METAL, CHIP 22 5% 1/16W
R261	1-216-801-11	s	METAL, CHIP 22 5% 1/16W
R262	1-218-883-11	s	METAL, CHIP 33K 0.50% 1/16W
R263	1-218-867-11	s	METAL, CHIP 6.8K 0.50% 1/16W
R264	1-218-879-11	s	METAL, CHIP 22K 0.50% 1/16W
R265	1-218-839-11	s	METAL, CHIP 470 0.50% 1/16W
R266	1-216-805-11	s	METAL, CHIP 47 5% 1/16W
R267	1-216-805-11	s	METAL, CHIP 47 5% 1/16W
R268	1-216-805-11	s	METAL, CHIP 47 5% 1/16W
R269	1-218-865-11	s	METAL, CHIP 5.6K 0.50% 1/16W
R270	1-218-859-11	s	METAL, CHIP 3.3K 0.50% 1/16W
R304	1-216-801-11	s	METAL, CHIP 22 5% 1/16W
R307	1-216-845-11	s	METAL, CHIP 100K 5% 1/16W
R308	1-216-845-11	s	METAL, CHIP 100K 5% 1/16W
R309	1-216-845-11	s	METAL, CHIP 100K 5% 1/16W
R310	1-216-845-11	s	METAL, CHIP 100K 5% 1/16W
R311	1-216-845-11	s	METAL, CHIP 100K 5% 1/16W
R312	1-216-845-11	s	METAL, CHIP 100K 5% 1/16W
R313	1-216-845-11	s	METAL, CHIP 100K 5% 1/16W
R314	1-216-845-11	s	METAL, CHIP 100K 5% 1/16W
R315	1-216-845-11	s	METAL, CHIP 100K 5% 1/16W
R316	1-216-845-11	s	METAL, CHIP 100K 5% 1/16W
R317	1-216-845-11	s	METAL, CHIP 100K 5% 1/16W
R318	1-218-863-11	s	METAL, CHIP 4.7K 0.50% 1/16W
R319	1-218-863-11	s	METAL, CHIP 4.7K 0.50% 1/16W
R320	1-216-833-91	s	METAL, CHIP 10K 5% 1/16W
R321	1-216-833-91	s	METAL, CHIP 10K 5% 1/16W
R322	1-216-864-11	s	METAL, CHIP 0 5% 1/16W
R324	1-216-845-11	s	METAL, CHIP 100K 5% 1/16W
R325	1-216-809-11	s	METAL, CHIP 100 5% 1/16W
R326	1-216-833-91	s	METAL, CHIP 10K 5% 1/16W
R327	1-216-821-11	s	METAL, CHIP 1K 5% 1/16W
R328	1-216-809-11	s	METAL, CHIP 100 5% 1/16W
R329	1-216-809-11	s	METAL, CHIP 100 5% 1/16W
R330	1-216-809-11	s	METAL, CHIP 100 5% 1/16W
R331	1-216-797-11	s	METAL, CHIP 10 5% 1/16W
R332	1-216-821-11	s	METAL, CHIP 1K 5% 1/16W
R333	1-216-821-11	s	METAL, CHIP 1K 5% 1/16W
R334	1-216-821-11	s	METAL, CHIP 1K 5% 1/16W
R335	1-216-809-11	s	METAL, CHIP 100 5% 1/16W
R336	1-216-809-11	s	METAL, CHIP 100 5% 1/16W
R337	1-216-809-11	s	METAL, CHIP 100 5% 1/16W
R338	1-216-809-11	s	METAL, CHIP 100 5% 1/16W
R339	1-216-845-11	s	METAL, CHIP 100K 5% 1/16W
R340	1-216-809-11	s	METAL, CHIP 100 5% 1/16W
R341	1-216-797-11	s	METAL, CHIP 10 5% 1/16W
R421	1-216-851-11	s	METAL, CHIP 330K 5% 1/16W
R423	1-216-809-11	s	METAL, CHIP 100 5% 1/16W
R424	1-216-809-11	s	METAL, CHIP 100 5% 1/16W
R425	1-216-809-11	s	METAL, CHIP 100 5% 1/16W
R426	1-216-809-11	s	METAL, CHIP 100 5% 1/16W
R427	1-216-809-11	s	METAL, CHIP 100 5% 1/16W
R428	1-216-809-11	s	METAL, CHIP 100 5% 1/16W
R429	1-216-809-11	s	METAL, CHIP 100 5% 1/16W
R430	1-216-809-11	s	METAL, CHIP 100 5% 1/16W
R431	1-216-809-11	s	METAL, CHIP 100 5% 1/16W
R432	1-216-809-11	s	METAL, CHIP 100 5% 1/16W
R433	1-216-821-11	s	METAL, CHIP 1K 5% 1/16W
R434	1-218-871-11	s	METAL, CHIP 10K 0.50% 1/16W

(SDI-44 BOARD)

Ref. No. or Q'ty	Part No.	SP	Description
R435	1-218-885-11	s	METAL, CHIP 39K 0.50% 1/16W
R436	1-216-833-91	s	METAL, CHIP 10K 5% 1/16W
R439	1-216-809-11	s	METAL, CHIP 100 5% 1/16W
R440	1-216-797-11	s	METAL, CHIP 10 5% 1/16W
R441	1-216-797-11	s	METAL, CHIP 10 5% 1/16W
R443	1-216-797-11	s	METAL, CHIP 10 5% 1/16W
R445	1-216-797-11	s	METAL, CHIP 10 5% 1/16W
R446	1-216-842-11	s	METAL, CHIP 56K 5% 1/16W
R447	1-216-797-11	s	METAL, CHIP 10 5% 1/16W
R450	1-216-864-11	s	METAL, CHIP 0 5% 1/16W
R453	1-216-864-11	s	METAL, CHIP 0 5% 1/16W
R455	1-216-845-11	s	METAL, CHIP 100K 5% 1/16W
R456	1-216-845-11	s	METAL, CHIP 100K 5% 1/16W
R457	1-216-797-11	s	METAL, CHIP 10 5% 1/16W
R460	1-216-797-11	s	METAL, CHIP 10 5% 1/16W
R463	1-216-845-11	s	METAL, CHIP 100K 5% 1/16W
R464	1-216-797-11	s	METAL, CHIP 10 5% 1/16W
R504	1-216-833-91	s	METAL, CHIP 10K 5% 1/16W
R505	1-216-833-91	s	METAL, CHIP 10K 5% 1/16W
R509	1-218-879-11	s	METAL, CHIP 22K 0.50% 1/16W
R510	1-216-814-11	s	METAL, CHIP 270 5% 1/16W
R511	1-216-845-11	s	METAL, CHIP 100K 5% 1/16W
R512	1-216-845-11	s	METAL, CHIP 100K 5% 1/16W
R513	1-216-845-11	s	METAL, CHIP 100K 5% 1/16W
R514	1-216-845-11	s	METAL, CHIP 100K 5% 1/16W
R517	1-216-845-11	s	METAL, CHIP 100K 5% 1/16W
R518	1-218-863-11	s	METAL, CHIP 4.7K 0.50% 1/16W
R532	1-216-833-91	s	METAL, CHIP 10K 5% 1/16W
R533	1-216-833-91	s	METAL, CHIP 10K 5% 1/16W
R539	1-216-864-11	s	METAL, CHIP 0 5% 1/16W
R542	1-216-864-11	s	METAL, CHIP 0 5% 1/16W
R543	1-216-864-11	s	METAL, CHIP 0 5% 1/16W
R544	1-216-864-11	s	METAL, CHIP 0 5% 1/16W
R545	1-216-864-11	s	METAL, CHIP 0 5% 1/16W
R601	1-216-821-11	s	METAL, CHIP 1K 5% 1/16W
R602	1-216-821-11	s	METAL, CHIP 1K 5% 1/16W
R603	1-218-883-11	s	METAL, CHIP 33K 0.50% 1/16W
R604	1-218-883-11	s	METAL, CHIP 33K 0.50% 1/16W
R624	1-216-813-11	s	METAL, CHIP 220 5% 1/16W
R625	1-218-883-11	s	METAL, CHIP 33K 0.50% 1/16W
R626	1-216-821-11	s	METAL, CHIP 1K 5% 1/16W
R627	1-218-859-11	s	METAL, CHIP 3.3K 0.50% 1/16W
R628	1-216-845-11	s	METAL, CHIP 100K 5% 1/16W
R629	1-216-813-11	s	METAL, CHIP 220 5% 1/16W
R630	1-216-813-11	s	METAL, CHIP 220 5% 1/16W
R636	1-216-845-11	s	METAL, CHIP 100K 5% 1/16W
R637	1-216-845-11	s	METAL, CHIP 100K 5% 1/16W
R638	1-216-845-11	s	METAL, CHIP 100K 5% 1/16W
R640	1-218-839-11	s	METAL, CHIP 470 0.50% 1/16W
R641	1-218-839-11	s	METAL, CHIP 470 0.50% 1/16W
R648	1-216-801-11	s	METAL, CHIP 22 5% 1/16W
R649	1-216-801-11	s	METAL, CHIP 22 5% 1/16W
R650	1-216-801-11	s	METAL, CHIP 22 5% 1/16W
R651	1-216-801-11	s	METAL, CHIP 22 5% 1/16W
R652	1-216-801-11	s	METAL, CHIP 22 5% 1/16W
R653	1-216-801-11	s	METAL, CHIP 22 5% 1/16W
R654	1-216-801-11	s	METAL, CHIP 22 5% 1/16W
R655	1-216-801-11	s	METAL, CHIP 22 5% 1/16W
R656	1-216-801-11	s	METAL, CHIP 22 5% 1/16W

(SDI-44 BOARD)

Ref. No. or Q'ty	Part No.	SP	Description
R657	1-216-801-11	s	METAL, CHIP 22 5% 1/16W
R658	1-216-801-11	s	METAL, CHIP 22 5% 1/16W
R659	1-216-801-11	s	METAL, CHIP 22 5% 1/16W
R660	1-216-809-11	s	METAL, CHIP 100 5% 1/16W
R706	1-216-813-11	s	METAL, CHIP 220 5% 1/16W
R707	1-216-813-11	s	METAL, CHIP 220 5% 1/16W
R709	1-218-887-11	s	METAL, CHIP 47K 0.50% 1/16W
R710	1-218-881-11	s	METAL, CHIP 27K 0.50% 1/16W
R711	1-218-887-11	s	METAL, CHIP 47K 0.50% 1/16W
R712	1-218-881-11	s	METAL, CHIP 27K 0.50% 1/16W
R715	1-216-814-11	s	METAL, CHIP 270 5% 1/16W
R716	1-218-847-11	s	METAL, CHIP 1K 0.50% 1/16W
R717	1-216-814-11	s	METAL, CHIP 270 5% 1/16W
R720	1-216-808-11	s	METAL, CHIP 82 5% 1/16W
R721	1-216-803-11	s	METAL, CHIP 33 5% 1/16W
R723	1-216-808-11	s	METAL, CHIP 82 5% 1/16W
R724	1-216-803-11	s	METAL, CHIP 33 5% 1/16W
R725	1-216-803-11	s	METAL, CHIP 33 5% 1/16W
R727	1-216-797-11	s	METAL, CHIP 10 5% 1/16W
R728	1-216-797-11	s	METAL, CHIP 10 5% 1/16W
R729	1-216-811-11	s	METAL, CHIP 150 5% 1/16W
R730	1-216-821-11	s	METAL, CHIP 1K 5% 1/16W
R731	1-216-807-11	s	METAL, CHIP 68 5% 1/16W
R732	1-216-811-11	s	METAL, CHIP 150 5% 1/16W
R733	1-216-821-11	s	METAL, CHIP 1K 5% 1/16W
R734	1-216-807-11	s	METAL, CHIP 68 5% 1/16W
R737	1-216-821-11	s	METAL, CHIP 1K 5% 1/16W
R738	1-216-821-11	s	METAL, CHIP 1K 5% 1/16W
R739	1-218-857-11	s	METAL, CHIP 2.7K 0.50% 1/16W
R740	1-218-855-11	s	METAL, CHIP 2.2K 0.50% 1/16W
R741	1-218-857-11	s	METAL, CHIP 2.7K 0.50% 1/16W
R742	1-218-857-11	s	METAL, CHIP 2.7K 0.50% 1/16W
R743	1-218-851-11	s	METAL, CHIP 1.5K 0.50% 1/16W
R744	1-218-871-11	s	METAL, CHIP 10K 0.50% 1/16W
R745	1-216-864-11	s	METAL, CHIP 0 5% 1/16W
R747	1-216-797-11	s	METAL, CHIP 10 5% 1/16W
R749	1-216-797-11	s	METAL, CHIP 10 5% 1/16W
R750	1-216-797-11	s	METAL, CHIP 10 5% 1/16W
R753	1-216-797-11	s	METAL, CHIP 10 5% 1/16W
R754	1-216-813-11	s	METAL, CHIP 220 5% 1/16W
R801	1-216-797-11	s	METAL, CHIP 10 5% 1/16W
R803	1-216-797-11	s	METAL, CHIP 10 5% 1/16W
R806	1-216-797-11	s	METAL, CHIP 10 5% 1/16W
R807	1-216-797-11	s	METAL, CHIP 10 5% 1/16W
R810	1-216-797-11	s	METAL, CHIP 10 5% 1/16W
R812	1-216-797-11	s	METAL, CHIP 10 5% 1/16W
R816	1-216-797-11	s	METAL, CHIP 10 5% 1/16W
R817	1-218-863-11	s	METAL, CHIP 4.7K 0.50% 1/16W
R819	1-216-797-11	s	METAL, CHIP 10 5% 1/16W
R821	1-218-851-11	s	METAL, CHIP 1.5K 0.50% 1/16W
R822	1-216-833-91	s	METAL, CHIP 10K 5% 1/16W
R832	1-218-861-11	s	METAL, CHIP 3.9K 0.50% 1/16W
R837	1-218-859-11	s	METAL, CHIP 3.3K 0.50% 1/16W
R838	1-218-863-11	s	METAL, CHIP 4.7K 0.50% 1/16W
R839	1-216-809-11	s	METAL, CHIP 100 5% 1/16W
R845	1-218-887-11	s	METAL, CHIP 47K 0.50% 1/16W
R846	1-218-887-11	s	METAL, CHIP 47K 0.50% 1/16W
R848	1-218-847-11	s	METAL, CHIP 1K 0.50% 1/16W
R850	1-218-866-11	s	METAL, CHIP 6.2K 0.50% 1/16W

(SDI-44 BOARD)

Ref. No. or Q'ty	Part No.	SP	Description
R851	1-218-863-11	s	METAL, CHIP 4.7K 0.50% 1/16W
R852	1-218-871-11	s	METAL, CHIP 10K 0.50% 1/16W
R856	1-218-863-11	s	METAL, CHIP 4.7K 0.50% 1/16W
R857	1-216-809-11	s	METAL, CHIP 100 5% 1/16W
R858	1-218-871-11	s	METAL, CHIP 10K 0.50% 1/16W
R859	1-218-871-11	s	METAL, CHIP 10K 0.50% 1/16W
R861	1-216-801-11	s	METAL, CHIP 22 5% 1/16W
R864	1-218-895-11	s	METAL, CHIP 100K 0.50% 1/16W
R865	1-216-797-11	s	METAL, CHIP 10 5% 1/16W
R867	1-216-797-11	s	METAL, CHIP 10 5% 1/16W
R875	1-218-871-11	s	METAL, CHIP 10K 0.50% 1/16W
R876	1-216-797-11	s	METAL, CHIP 10 5% 1/16W
R883	1-216-797-11	s	METAL, CHIP 10 5% 1/16W
R885	1-216-797-11	s	METAL, CHIP 10 5% 1/16W
R887	1-216-797-11	s	METAL, CHIP 10 5% 1/16W
R888	1-216-797-11	s	METAL, CHIP 10 5% 1/16W
R889	1-216-797-11	s	METAL, CHIP 10 5% 1/16W
R891	1-216-797-11	s	METAL, CHIP 10 5% 1/16W
R892	1-216-797-11	s	METAL, CHIP 10 5% 1/16W
R893	1-216-797-11	s	METAL, CHIP 10 5% 1/16W
R894	1-216-797-11	s	METAL, CHIP 10 5% 1/16W
R896	1-216-797-11	s	METAL, CHIP 10 5% 1/16W
R897	1-216-797-11	s	METAL, CHIP 10 5% 1/16W
R898	1-216-797-11	s	METAL, CHIP 10 5% 1/16W
R899	1-216-797-11	s	METAL, CHIP 10 5% 1/16W
R902	1-216-833-91	s	METAL, CHIP 10K 5% 1/16W
R904	1-216-833-91	s	METAL, CHIP 10K 5% 1/16W
R908	1-216-845-11	s	METAL, CHIP 100K 5% 1/16W
R909	1-216-845-11	s	METAL, CHIP 100K 5% 1/16W
R910	1-216-821-11	s	METAL, CHIP 1K 5% 1/16W
R911	1-216-821-11	s	METAL, CHIP 1K 5% 1/16W
R912	1-218-859-11	s	METAL, CHIP 3.3K 0.50% 1/16W
R917	1-218-859-11	s	METAL, CHIP 3.3K 0.50% 1/16W
R930	1-216-833-91	s	METAL, CHIP 10K 5% 1/16W
R931	1-216-833-91	s	METAL, CHIP 10K 5% 1/16W
R933	1-216-809-11	s	METAL, CHIP 100 5% 1/16W
R935	1-216-809-11	s	METAL, CHIP 100 5% 1/16W
R938	1-218-859-11	s	METAL, CHIP 3.3K 0.50% 1/16W
R939	1-218-859-11	s	METAL, CHIP 3.3K 0.50% 1/16W
R940	1-218-879-11	s	METAL, CHIP 22K 0.50% 1/16W
R941	1-218-879-11	s	METAL, CHIP 22K 0.50% 1/16W
R945	1-218-839-11	s	METAL, CHIP 470 0.50% 1/16W
R947	1-218-839-11	s	METAL, CHIP 470 0.50% 1/16W
R948	1-218-861-11	s	METAL, CHIP 3.9K 0.50% 1/16W
R950	1-218-861-11	s	METAL, CHIP 3.9K 0.50% 1/16W
R952	1-216-808-11	s	METAL, CHIP 82 5% 1/16W
R953	1-216-808-11	s	METAL, CHIP 82 5% 1/16W
R954	1-216-808-11	s	METAL, CHIP 82 5% 1/16W
R955	1-216-808-11	s	METAL, CHIP 82 5% 1/16W
R957	1-216-821-11	s	METAL, CHIP 1K 5% 1/16W
R958	1-216-809-11	s	METAL, CHIP 100 5% 1/16W
R960	1-216-809-11	s	METAL, CHIP 100 5% 1/16W
R961	1-216-809-11	s	METAL, CHIP 100 5% 1/16W
R963	1-216-809-11	s	METAL, CHIP 100 5% 1/16W
R964	1-218-879-11	s	METAL, CHIP 22K 0.50% 1/16W
R966	1-216-809-11	s	METAL, CHIP 100 5% 1/16W
R967	1-218-879-11	s	METAL, CHIP 22K 0.50% 1/16W
R970	1-216-864-11	s	METAL, CHIP 0 5% 1/16W
R971	1-216-864-11	s	METAL, CHIP 0 5% 1/16W

(SDI-44 BOARD)

Ref. No. or Q'ty	Part No.	SP	Description
R972	1-216-833-91	s	METAL, CHIP 10K 5% 1/16W
R973	1-216-833-91	s	METAL, CHIP 10K 5% 1/16W
R1046	1-218-885-11	s	METAL, CHIP 39K 0.50% 1/16W
R1052	1-218-895-11	s	METAL, CHIP 100K 0.50% 1/16W
R1059	1-218-895-11	s	METAL, CHIP 100K 0.50% 1/16W
R1060	1-218-879-11	s	METAL, CHIP 22K 0.50% 1/16W
R1061	1-218-871-11	s	METAL, CHIP 10K 0.50% 1/16W
R1062	1-218-887-11	s	METAL, CHIP 47K 0.50% 1/16W
R1063	1-218-895-11	s	METAL, CHIP 100K 0.50% 1/16W
R1064	1-218-879-11	s	METAL, CHIP 22K 0.50% 1/16W
R1065	1-218-895-11	s	METAL, CHIP 100K 0.50% 1/16W
R1066	1-218-879-11	s	METAL, CHIP 22K 0.50% 1/16W
R1067	1-218-871-11	s	METAL, CHIP 10K 0.50% 1/16W
R1068	1-218-887-11	s	METAL, CHIP 47K 0.50% 1/16W
R1069	1-218-895-11	s	METAL, CHIP 100K 0.50% 1/16W
R1070	1-218-871-11	s	METAL, CHIP 10K 0.50% 1/16W
R1071	1-218-887-11	s	METAL, CHIP 47K 0.50% 1/16W
R1072	1-218-895-11	s	METAL, CHIP 100K 0.50% 1/16W
R1075	1-216-797-11	s	METAL, CHIP 10 5% 1/16W
R1079	1-218-903-11	s	METAL, CHIP 220K 0.50% 1/16W
R1080	1-218-903-11	s	METAL, CHIP 220K 0.50% 1/16W
R1081	1-218-903-11	s	METAL, CHIP 220K 0.50% 1/16W
R1082	1-216-849-11	s	METAL, CHIP 220K 5% 1/16W
R1085	1-218-903-11	s	METAL, CHIP 220K 0.50% 1/16W
R1086	1-218-903-11	s	METAL, CHIP 220K 0.50% 1/16W
R1087	1-218-879-11	s	METAL, CHIP 22K 0.50% 1/16W
R1088	1-218-879-11	s	METAL, CHIP 22K 0.50% 1/16W
R1089	1-218-879-11	s	METAL, CHIP 22K 0.50% 1/16W
R1094	1-216-864-11	s	METAL, CHIP 0 5% 1/16W
R1099	1-216-864-11	s	METAL, CHIP 0 5% 1/16W
R1104	1-216-864-11	s	METAL, CHIP 0 5% 1/16W
R1200	1-216-855-11	s	METAL, CHIP 680K 5% 1/16W
R1201	1-216-813-11	s	METAL, CHIP 220 5% 1/16W
R1202	1-216-809-11	s	METAL, CHIP 100 5% 1/16W
R1203	1-216-809-11	s	METAL, CHIP 100 5% 1/16W
R1300	1-216-833-91	s	METAL, CHIP 10K 5% 1/16W
R1301	1-216-797-11	s	METAL, CHIP 10 5% 1/16W
R1302	1-218-863-11	s	METAL, CHIP 4.7K 0.50% 1/16W
R1303	1-218-839-11	s	METAL, CHIP 470 0.50% 1/16W
R1304	1-218-859-11	s	METAL, CHIP 3.3K 0.50% 1/16W
R1305	1-218-845-11	s	METAL, CHIP 820 0.50% 1/16W
R1306	1-218-839-11	s	METAL, CHIP 470 0.50% 1/16W
R1307	1-218-829-11	s	METAL, CHIP 180 0.50% 1/16W
R1308	1-218-839-11	s	METAL, CHIP 470 0.50% 1/16W
R1310	1-218-839-11	s	METAL, CHIP 470 0.50% 1/16W
R1311	1-216-797-11	s	METAL, CHIP 10 5% 1/16W
R1312	1-218-839-11	s	METAL, CHIP 470 0.50% 1/16W
R1313	1-218-839-11	s	METAL, CHIP 470 0.50% 1/16W
R1315	1-218-839-11	s	METAL, CHIP 470 0.50% 1/16W
R1319	1-218-855-11	s	METAL, CHIP 2.2K 0.50% 1/16W
R1320	1-218-843-11	s	METAL, CHIP 680 0.50% 1/16W
R1325	1-218-895-11	s	METAL, CHIP 100K 0.50% 1/16W
R1326	1-218-870-11	s	METAL, CHIP 9.1K 0.50% 1/16W
R1327	1-218-871-11	s	METAL, CHIP 10K 0.50% 1/16W
R1332	1-216-797-11	s	METAL, CHIP 10 5% 1/16W
R1333	1-216-813-11	s	METAL, CHIP 220 5% 1/16W
R1334	1-216-813-11	s	METAL, CHIP 220 5% 1/16W
R1335	1-216-797-11	s	METAL, CHIP 10 5% 1/16W
R1336	1-216-797-11	s	METAL, CHIP 10 5% 1/16W

(SDI-44 BOARD)

Ref. No. or Q'ty	Part No.	SP	Description
R1338	1-218-855-11	s	METAL, CHIP 2.2K 0.50% 1/16W
R1339	1-218-863-11	s	METAL, CHIP 4.7K 0.50% 1/16W
R1340	1-218-863-11	s	METAL, CHIP 4.7K 0.50% 1/16W
R1341	1-218-823-11	s	METAL, CHIP 100 0.50% 1/16W
R1400	1-216-833-91	s	METAL, CHIP 10K 5% 1/16W
R1401	1-216-797-11	s	METAL, CHIP 10 5% 1/16W
R1402	1-218-845-11	s	METAL, CHIP 820 0.50% 1/16W
R1403	1-218-845-11	s	METAL, CHIP 820 0.50% 1/16W
R1404	1-218-871-11	s	METAL, CHIP 10K 0.50% 1/16W
R1405	1-218-871-11	s	METAL, CHIP 10K 0.50% 1/16W
R1406	1-218-847-11	s	METAL, CHIP 1K 0.50% 1/16W
R1407	1-218-847-11	s	METAL, CHIP 1K 0.50% 1/16W
R1408	1-218-855-11	s	METAL, CHIP 2.2K 0.50% 1/16W
R1409	1-216-809-11	s	METAL, CHIP 100 5% 1/16W
R1410	1-218-847-11	s	METAL, CHIP 1K 0.50% 1/16W
R1411	1-218-851-11	s	METAL, CHIP 1.5K 0.50% 1/16W
R1412	1-218-866-11	s	METAL, CHIP 6.2K 0.50% 1/16W
R1414	1-218-847-11	s	METAL, CHIP 1K 0.50% 1/16W
R1415	1-218-861-11	s	METAL, CHIP 3.9K 0.50% 1/16W
R1416	1-218-871-11	s	METAL, CHIP 10K 0.50% 1/16W
R1419	1-218-895-11	s	METAL, CHIP 100K 0.50% 1/16W
R1420	1-218-871-11	s	METAL, CHIP 10K 0.50% 1/16W
R1421	1-218-879-11	s	METAL, CHIP 22K 0.50% 1/16W
R1422	1-216-809-11	s	METAL, CHIP 100 5% 1/16W
R1423	1-218-863-11	s	METAL, CHIP 4.7K 0.50% 1/16W
R1424	1-218-855-11	s	METAL, CHIP 2.2K 0.50% 1/16W
R1425	1-216-797-11	s	METAL, CHIP 10 5% 1/16W
R1426	1-216-797-11	s	METAL, CHIP 10 5% 1/16W
R1427	1-218-851-11	s	METAL, CHIP 1.5K 0.50% 1/16W
R1428	1-218-823-11	s	METAL, CHIP 100 0.50% 1/16W
R1429	1-218-871-11	s	METAL, CHIP 10K 0.50% 1/16W
R1430	1-218-839-11	s	METAL, CHIP 470 0.50% 1/16W
R1431	1-218-863-11	s	METAL, CHIP 4.7K 0.50% 1/16W
R1434	1-218-863-11	s	METAL, CHIP 4.7K 0.50% 1/16W
R1500	1-216-833-91	s	METAL, CHIP 10K 5% 1/16W
R1501	1-216-797-11	s	METAL, CHIP 10 5% 1/16W
R1502	1-218-845-11	s	METAL, CHIP 820 0.50% 1/16W
R1503	1-218-845-11	s	METAL, CHIP 820 0.50% 1/16W
R1504	1-218-871-11	s	METAL, CHIP 10K 0.50% 1/16W
R1505	1-218-871-11	s	METAL, CHIP 10K 0.50% 1/16W
R1506	1-218-847-11	s	METAL, CHIP 1K 0.50% 1/16W
R1507	1-218-847-11	s	METAL, CHIP 1K 0.50% 1/16W
R1508	1-218-855-11	s	METAL, CHIP 2.2K 0.50% 1/16W
R1509	1-216-809-11	s	METAL, CHIP 100 5% 1/16W
R1510	1-218-847-11	s	METAL, CHIP 1K 0.50% 1/16W
R1511	1-218-851-11	s	METAL, CHIP 1.5K 0.50% 1/16W
R1512	1-218-866-11	s	METAL, CHIP 6.2K 0.50% 1/16W
R1514	1-218-847-11	s	METAL, CHIP 1K 0.50% 1/16W
R1515	1-218-861-11	s	METAL, CHIP 3.9K 0.50% 1/16W
R1516	1-218-871-11	s	METAL, CHIP 10K 0.50% 1/16W
R1519	1-218-895-11	s	METAL, CHIP 100K 0.50% 1/16W
R1520	1-218-871-11	s	METAL, CHIP 10K 0.50% 1/16W
R1521	1-218-879-11	s	METAL, CHIP 22K 0.50% 1/16W
R1522	1-216-809-11	s	METAL, CHIP 100 5% 1/16W
R1523	1-218-863-11	s	METAL, CHIP 4.7K 0.50% 1/16W
R1524	1-218-855-11	s	METAL, CHIP 2.2K 0.50% 1/16W
R1525	1-216-797-11	s	METAL, CHIP 10 5% 1/16W
R1526	1-216-797-11	s	METAL, CHIP 10 5% 1/16W
R1527	1-218-885-11	s	METAL, CHIP 39K 0.50% 1/16W

(SDI-44 BOARD)

Ref. No. or Q'ty	Part No.	SP	Description
R1529	1-218-851-11	s	METAL, CHIP 1.5K 0.50% 1/16W
R1530	1-218-823-11	s	METAL, CHIP 100 0.50% 1/16W
R1531	1-218-871-11	s	METAL, CHIP 10K 0.50% 1/16W
R1532	1-218-839-11	s	METAL, CHIP 470 0.50% 1/16W
R1533	1-218-863-11	s	METAL, CHIP 4.7K 0.50% 1/16W
R1534	1-218-863-11	s	METAL, CHIP 4.7K 0.50% 1/16W
R1600	1-216-864-11	s	METAL, CHIP 0 5% 1/16W
R1601	1-216-813-11	s	METAL, CHIP 220 5% 1/16W
R1602	1-216-813-11	s	METAL, CHIP 220 5% 1/16W
R1603	1-216-797-11	s	METAL, CHIP 10 5% 1/16W
R1604	1-218-903-11	s	METAL, CHIP 220K 0.50% 1/16W
R1605	1-216-849-11	s	METAL, CHIP 220K 5% 1/16W
R1607	1-216-797-11	s	METAL, CHIP 10 5% 1/16W
R1608	1-216-797-11	s	METAL, CHIP 10 5% 1/16W
RB301	1-236-904-11	s	RESISTOR BLOCK, CHIP 1KX4
RB302	1-236-907-11	s	RESISTOR BLOCK, CHIP 100KX4
RB303	1-239-409-11	s	RESISTOR BLOCK, CHIP 47X4
RB304	1-239-409-11	s	RESISTOR BLOCK, CHIP 47X4
RB305	1-239-409-11	s	RESISTOR BLOCK, CHIP 47X4
RB401	1-236-907-11	s	RESISTOR BLOCK, CHIP 100KX4
RB402	1-236-907-11	s	RESISTOR BLOCK, CHIP 100KX4
RB714	1-239-416-11	s	RESISTOR BLOCK, CHIP 220X4
RB715	1-239-416-11	s	RESISTOR BLOCK, CHIP 220X4
RB1001	1-239-444-11	s	RESUSTIR BLOCK, CHIP 220K
RB1002	1-239-444-11	s	RESUSTIR BLOCK, CHIP 220K
RB1003	1-239-444-11	s	RESUSTIR BLOCK, CHIP 220K
RB1004	1-239-444-11	s	RESUSTIR BLOCK, CHIP 220K
RB1005	1-239-444-11	s	RESUSTIR BLOCK, CHIP 220K
RB1006	1-239-444-11	s	RESUSTIR BLOCK, CHIP 220K
RB1300	1-239-416-11	s	RESISTOR BLOCK, CHIP 220X4
RB1301	1-239-416-11	s	RESISTOR BLOCK, CHIP 220X4
RB1600	1-239-416-11	s	RESISTOR BLOCK, CHIP 220X4
RB1601	1-239-416-11	s	RESISTOR BLOCK, CHIP 220X4
RB1602	1-239-444-11	s	RESUSTIR BLOCK, CHIP 220K
RB1603	1-239-444-11	s	RESUSTIR BLOCK, CHIP 220K
RS322	1-216-864-11	s	METAL, CHIP 0 5% 1/16W
RS401	1-216-864-11	s	METAL, CHIP 0 5% 1/16W
RS403	1-216-864-11	s	METAL, CHIP 0 5% 1/16W
RS405	1-216-864-11	s	METAL, CHIP 0 5% 1/16W
RS408	1-216-864-11	s	METAL, CHIP 0 5% 1/16W
RS409	1-216-864-11	s	METAL, CHIP 0 5% 1/16W
RS414	1-216-864-11	s	METAL, CHIP 0 5% 1/16W
RS415	1-216-864-11	s	METAL, CHIP 0 5% 1/16W
RS416	1-216-864-11	s	METAL, CHIP 0 5% 1/16W
RS417	1-216-864-11	s	METAL, CHIP 0 5% 1/16W
RS418	1-216-864-11	s	METAL, CHIP 0 5% 1/16W
RS419	1-216-864-11	s	METAL, CHIP 0 5% 1/16W
RS420	1-216-864-11	s	METAL, CHIP 0 5% 1/16W
RS506	1-216-864-11	s	METAL, CHIP 0 5% 1/16W
RS507	1-216-864-11	s	METAL, CHIP 0 5% 1/16W
RS508	1-216-864-11	s	METAL, CHIP 0 5% 1/16W
RS515	1-216-864-11	s	METAL, CHIP 0 5% 1/16W
RS516	1-216-864-11	s	METAL, CHIP 0 5% 1/16W
RS903	1-216-864-11	s	METAL, CHIP 0 5% 1/16W
RS905	1-216-864-11	s	METAL, CHIP 0 5% 1/16W
S201	1-692-530-11	s	SWITCH, TOGGLE
S401	1-570-711-11	s	SWITCH, SLIDE
S601	1-570-711-11	s	SWITCH, SLIDE

(SDI-44 BOARD)

Ref. No. or Q'ty	Part No.	SP	Description
S602	1-692-088-41	s	SWITCH, PUSH
S701	1-570-711-11	s	SWITCH, SLIDE
X502	1-767-694-21	s	OSCILLATOR, CRYSTAL
X802	1-767-695-21	s	OSCILLATOR, CRYSTAL

6-4. CHANGED PARTS

NOTE: The numbers identified by marking with) are
matching with each serial numbers.

707) Serial No. 10181 and higher[For UC]
707) Serial No. 30036 and higher[For J]
707) Serial No. 40136 and higher[For UC]

802) Serial No. 10601 and higher[For UC]
802) Serial No. 30061 and higher[For J]
802) Serial No. 40251 and higher[For CE]

804) Serial No. 10601 and higher[For UC]
804) Serial No. 30086 and higher[For J]
804) Serial No. 40281 and higher[For CE]

807) Serial No. 30101 and higher[For UC]
807) Serial No. 10641 and higher[For UC]
807) Serial No. 40306 and higher[For CE]

808) Serial No. 30101 and higher[For UC]
808) Serial No. 10681 and higher[For UC]
808) Serial No. 40331 and higher[For UC]

AA-90 BOARD
---

707) S2007	NOT IN USE.	--->	1-570-711-11 s SWITCH, SLIDE

AU-234 BOARD
---

804) C40	NOT IN USE.	--->	1-163-038-00 s CERAMIC, CHIP 0.1uF 25V
804) C41	NOT IN USE.	--->	1-104-913-11 s TANTALUM, CHIP 10uF 20% 16V
804) FL1	1-239-601-11 s FILTER, CHIP EMI	--->	1-239-601-31 s FERRITE 0uH
804) FL2	1-239-601-11 s FILTER, CHIP EMI	--->	1-239-601-31 s FERRITE 0uH
804) FL3	1-239-601-11 s FILTER, CHIP EMI	--->	1-239-601-31 s FERRITE 0uH
804) FL4	1-239-601-11 s FILTER, CHIP EMI	--->	1-239-601-31 s FERRITE 0uH
804) FL5	1-239-601-11 s FILTER, CHIP EMI	--->	1-239-601-31 s FERRITE 0uH
804) FL6	1-239-601-11 s FILTER, CHIP EMI	--->	1-239-601-31 s FERRITE 0uH
804) Q10	NOT IN USE.	--->	8-729-120-28 s TRANSISTOR 2SC1623-L5L6
804) R100	NOT IN USE.	--->	1-208-806-11 s METAL, CHIP 10K 0.50% 1/10W
804) R19	1-208-830-11 s METAL 100K 0.50% 1/10W	--->	1-216-097-00 s METAL, CHIP 100K 5% 1/10W
804) R22	1-208-830-11 s METAL 100K 0.50% 1/10W	--->	1-216-097-00 s METAL, CHIP 100K 5% 1/10W
804) R58	1-208-838-11 s METAL, CHIP 220K 0.50% 1/10W	--->	1-208-790-11 s METAL, CHIP 2.2K 0.50% 1/10W
804) R86	1-216-295-00 s METAL, CHIP 0 5% 1/10W	--->	1-216-097-00 s METAL, CHIP 100K 5% 1/10W
804) R88	1-208-790-11 s METAL, CHIP 2.2K 0.50% 1/10W	--->	1-216-009-91 s METAL, CHIP 22 5% 1/10W
804) R96	NOT IN USE.	--->	1-208-782-11 s METAL, CHIP 1K 0.50% 1/10W
804) R97	NOT IN USE.	--->	1-208-782-11 s METAL, CHIP 1K 0.50% 1/10W
804) R98	NOT IN USE.	--->	1-208-838-91 s METAL, CHIP 220K 0.50% 1/10W
804) R99	NOT IN USE.	--->	1-208-820-11 s METAL, CHIP 39K 0.50% 1/10W
804) S5	NOT IN USE.	--->	1-571-277-11 s SWITCH, SLIDE

CT-181 BOARD
---

808) IC1008	8-759-940-45 s IC S-8054HN-CB	--->	8-759-542-91 s IC S-80840ANUP-ED4-T2
808) IC1023	8-759-336-84 s IC LC3564SM-10	--->	8-759-544-69 s IC LC3564BM-10-TLM
807) Q144	8-766-003-10 s TRANSISTOR SGM2016M-T7	--->	8-766-002-43 s TRANSISTOR SGM2016AM-T7

ES-20 BOARD[board suffix -11]
---

707) R540	1-216-646-11 s METAL, CHIP 620 0.5% 1/10W	--->	1-216-648-11 s METAL, CHIP 750 0.50% 1/10W
707) R547	1-216-646-11 s METAL, CHIP 620 0.5% 1/10W	--->	1-216-648-11 s METAL, CHIP 750 0.50% 1/10W

ES-20 BOARD[board suffix -12]
---

802) 1pc	NOT IN USE.	--->	A-8319-157-A o MOUNTED CIRCUIT BOARD, DU-33
804) C828	1-163-235-11 s CERAMIC, CHIP 22PF 5% 50V	--->	DELETED.
804) DL801	1-411-272-21 s DELAY LINE	->	1-234-157-21 s DELAY LINE
802) IC10	8-759-925-74 s IC SN74HC04ANS	--->	DELETED.
802) R826	1-208-790-11 s METAL, CHIP 2.2K 0.50% 1/10W [For J,UC]	--->	1-208-791-11 s METAL, CHIP 2.4K 0.50% 1/10W [For J,UC]
802) R838	1-208-806-11 s METAL, CHIP 10K 0.50% 1/10W [For J,UC]	--->	1-208-804-11 s METAL, CHIP 8.2K 0.50% 1/10W [For J,UC]
802) R851	1-208-791-11 s METAL, CHIP 2.4K 0.50% 1/10W	--->	1-208-790-11 s METAL, CHIP 2.2K 0.50% 1/10W
802) R853	1-208-790-11 s METAL, CHIP 2.2K 0.50% 1/10W [For CE]	--->	1-208-791-11 s METAL, CHIP 2.4K 0.50% 1/10W [For CE]
802) R995	1-216-295-00 s METAL, CHIP 0 5% 1/10W	--->	DELETED.

SECTION 7
BLOCK DIAGRAMS

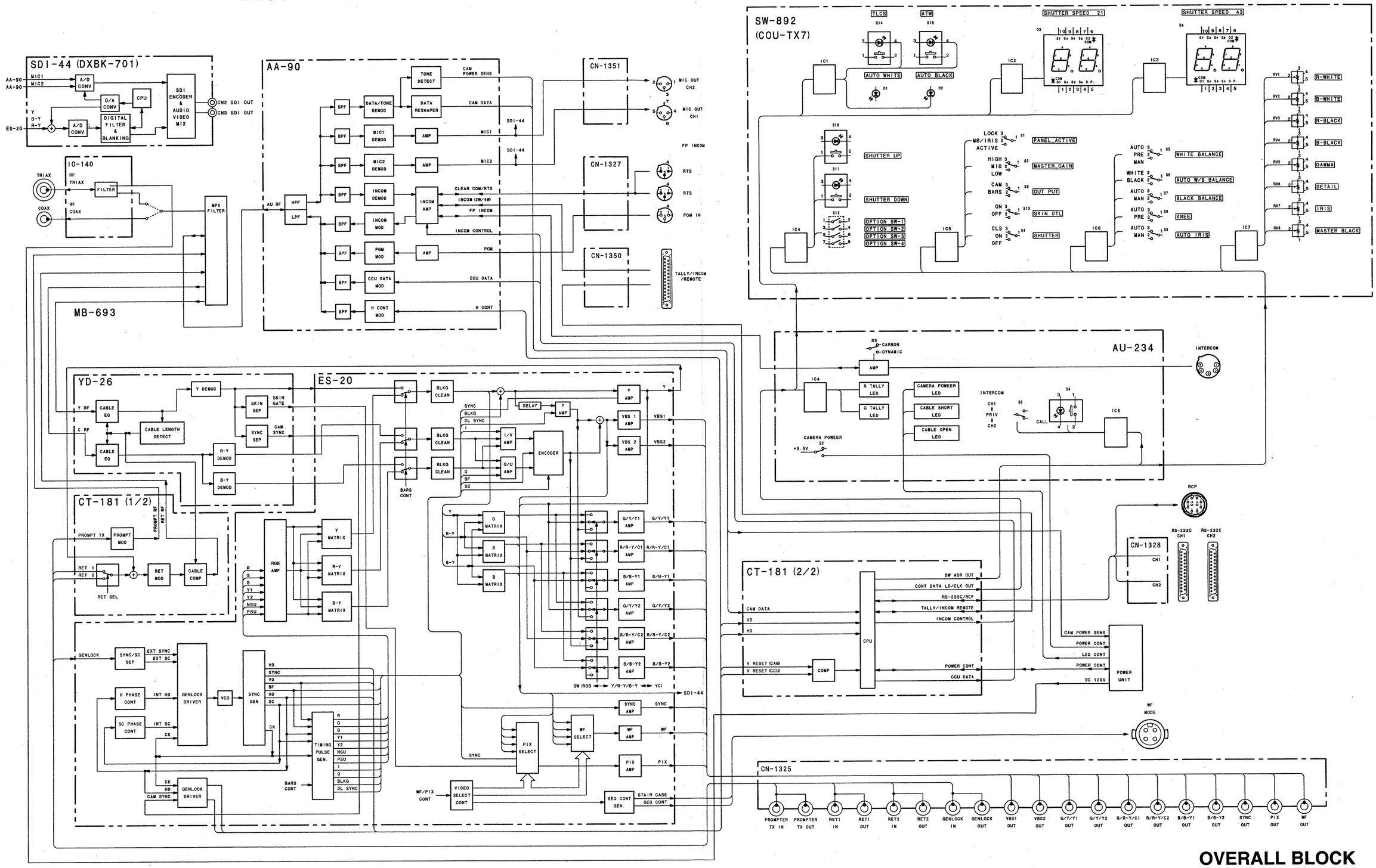

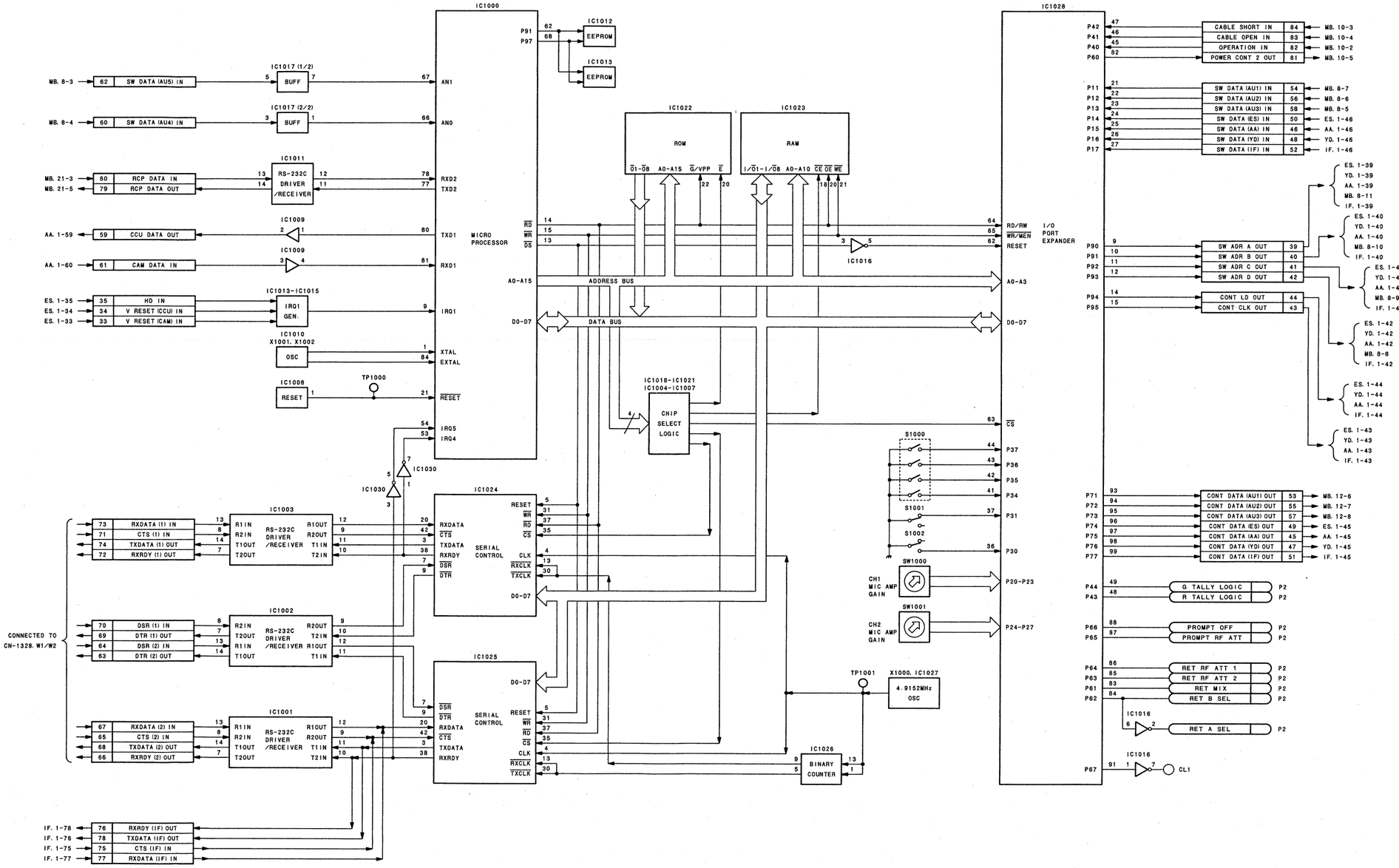

CT-181 BLOCK (1/2)

B-CCUTX7-CT181BLOCK/M

CT-181 BLOCK (2/2)

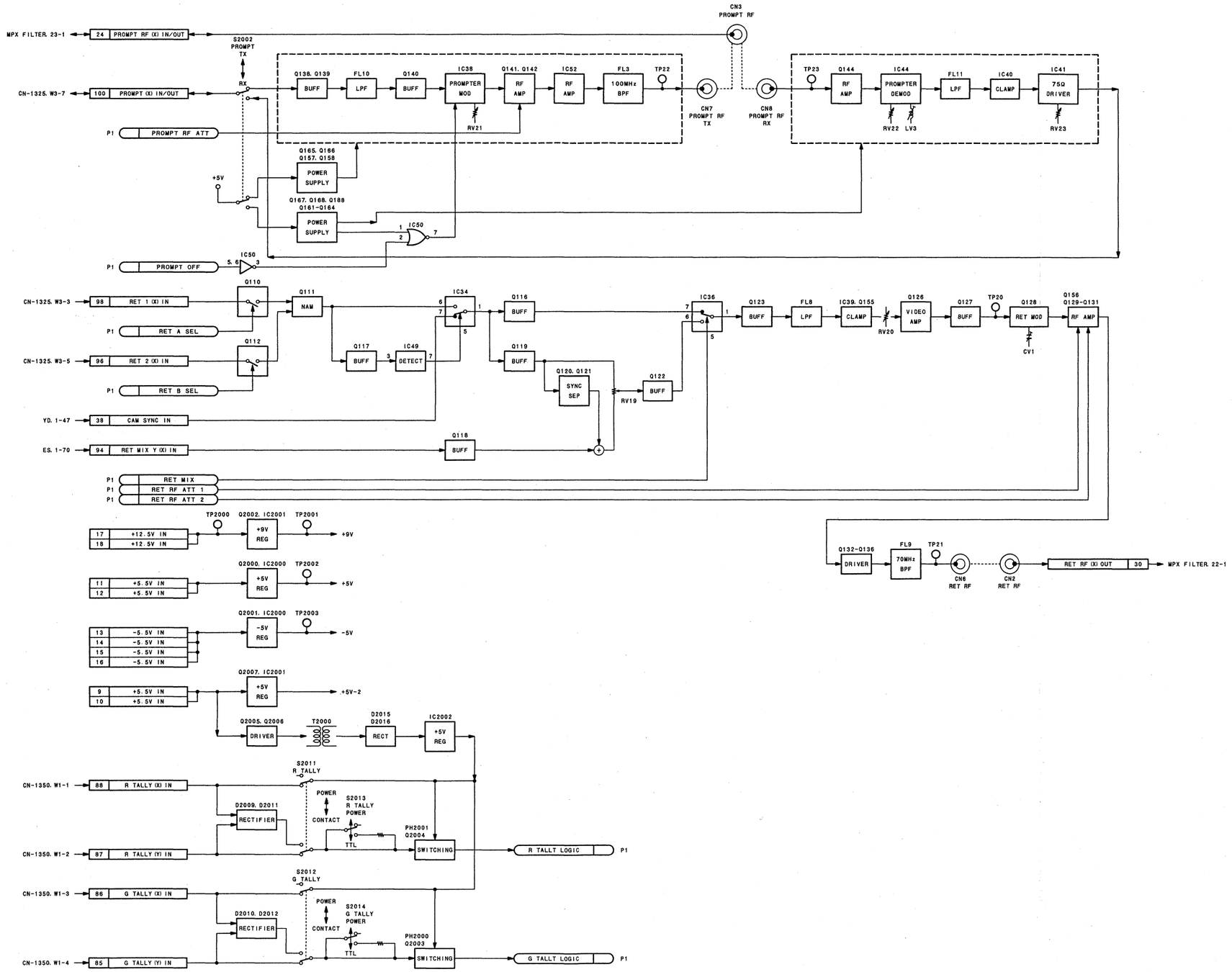

CT-181 BLOCK (2/2)

B-CCUTX7-CT181BLOCK/M

7-3

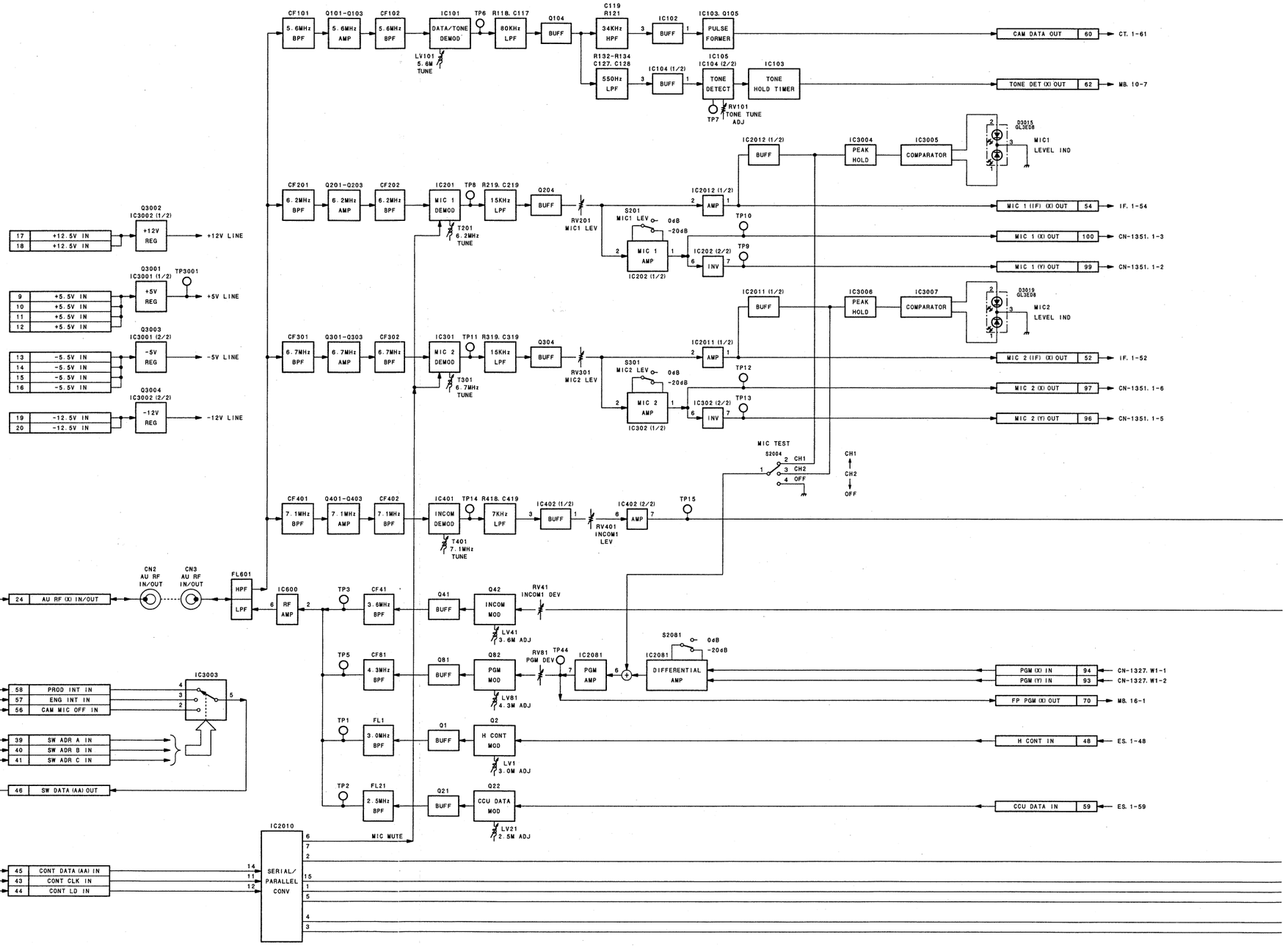
CF101 5.6MHz BPF
Q101-Q103 5.6MHz AMP
CF102 5.6MHz BPF
IC101 DATA/TONE DEMOD
LV101 5.6M TUNE
TP6
R118, C117 80KHz LPF
Q104 BUFF
C119 R121 34KHz HPF
IC102 BUFF
IC103, Q105 PULSE FORMER
CAM DATA OUT 60 CT. 1-61
R132-R134 C127, C128 550Hz LPF
IC104 (1/2) BUFF
IC105 IC104 (2/2) TONE DETECT
IC103 TONE HOLD TIMER
TONE DET (X) OUT 62 MB. 10-7
TP7
RV101 TONE TUNE ADJ
IC2012 (1/2) BUFF
IC3004 PEAK HOLD
IC3005 COMPARATOR
D3015 GL3E08
MIC1 LEVEL IND
CF201 6.2MHz BPF
Q201-Q203 6.2MHz AMP
CF202 6.2MHz BPF
IC201 MIC 1 DEMOD
TP8
T201 6.2MHz TUNE
R219, C219 15KHz LPF
Q204 BUFF
RV201 MIC1 LEV
IC2012 (1/2) AMP
TP10
S201 MIC1 LEV 0dB -20dB
MIC 1 AMP
IC202 (1/2)
IC202 (2/2) INV
TP9
MIC 1 (IF) (X) OUT 54 IF. 1-54
MIC 1 (X) OUT 100 CN-1351. 1-3
MIC 1 (Y) OUT 99 CN-1351. 1-2
CF301 6.7MHz BPF
Q301-Q303 6.7MHz AMP
CF302 6.7MHz BPF
IC301 MIC 2 DEMOD
TP11
T301 6.7MHz TUNE
R319, C319 15KHz LPF
Q304 BUFF
RV301 MIC2 LEV
IC2011 (1/2) BUFF
IC3006 PEAK HOLD
IC3007 COMPARATOR
D3019 GL3E08
MIC2 LEVEL IND
IC2011 (1/2) AMP
S301 MIC2 LEV 0dB -20dB
TP12
MIC 2 AMP
IC302 (1/2)
IC302 (2/2) INV
TP13
MIC 2 (IF) (X) OUT 52 IF. 1-52
MIC 2 (X) OUT 97 CN-1351. 1-6
MIC 2 (Y) OUT 96 CN-1351. 1-5
MIC TEST
S2004 2 CH1 3 CH2 4 OFF
CH1
CH2
OFF
CF401 7.1MHz BPF
Q401-Q403 7.1MHz AMP
CF402 7.1MHz BPF
IC401 INCOM DEMOD
TP14
T401 7.1MHz TUNE
R418, C419 7KHz LPF
IC402 (1/2) BUFF
RV401 INCOM1 LEV
IC402 (2/2) AMP
TP15
CN2 AU RF IN/OUT
CN3 AU RF IN/OUT
FL601 HPF LPF
MPX FILTER. 24-1
24 AU RF (X) IN/OUT
IC600 RF AMP
TP3
CF41 3.6MHz BPF
Q41 BUFF
Q42 INCOM MOD
RV41 INCOM1 DEV
LV41 3.6M ADJ
TP5
CF81 4.3MHz BPF
Q81 BUFF
Q82 PGM MOD
RV81 PGM DEV
TP44
LV81 4.3M ADJ
IC2081 PGM AMP
IC2081 DIFFERENTIAL AMP
S2081 0dB -20dB
PGM (X) IN 94 CN-1327. W1-1
PGM (Y) IN 93 CN-1327. W1-2
FP PGM (X) OUT 70 MB. 16-1
TP1
FL1 3.0MHz BPF
Q1 BUFF
Q2 H CONT MOD
LV1 3.0M ADJ
H CONT IN 48 ES. 1-48
TP2
FL21 2.5MHz BPF
Q21 BUFF
Q22 CCU DATA MOD
LV21 2.5M ADJ
CCU DATA IN 59 ES. 1-59
MIC MUTE
IC3003
CN-1350. 1-A9 58 PROD INT IN
CN-1350. 1-B9 57 ENG INT IN
CN-1350. 1-A10 56 CAM MIC OFF IN
CT. 1-41 39 SW ADR A IN
CT. 1-40 40 SW ADR B IN
CT. 1-39 41 SW ADR C IN
CT. 1-46 46 SW DATA (AA) OUT
IC2010 SERIAL/ PARALLEL CONV
CT. 1-45 45 CONT DATA (AA) IN
CT. 1-43 43 CONT CLK IN
CT. 1-44 44 CONT LD IN
Q3002 IC3002 (1/2) +12V REG
17 +12.5V IN
18 +12.5V IN
+12V LINE
Q3001 IC3001 (1/2) +5V REG
TP3001
9 +5.5V IN
10 +5.5V IN
11 +5.5V IN
12 +5.5V IN
+5V LINE
Q3003 IC3001 (2/2) -5V REG
13 -5.5V IN
14 -5.5V IN
15 -5.5V IN
16 -5.5V IN
-5V LINE
Q3004 IC3002 (2/2) -12V REG
19 -12.5V IN
20 -12.5V IN
-12V LINE

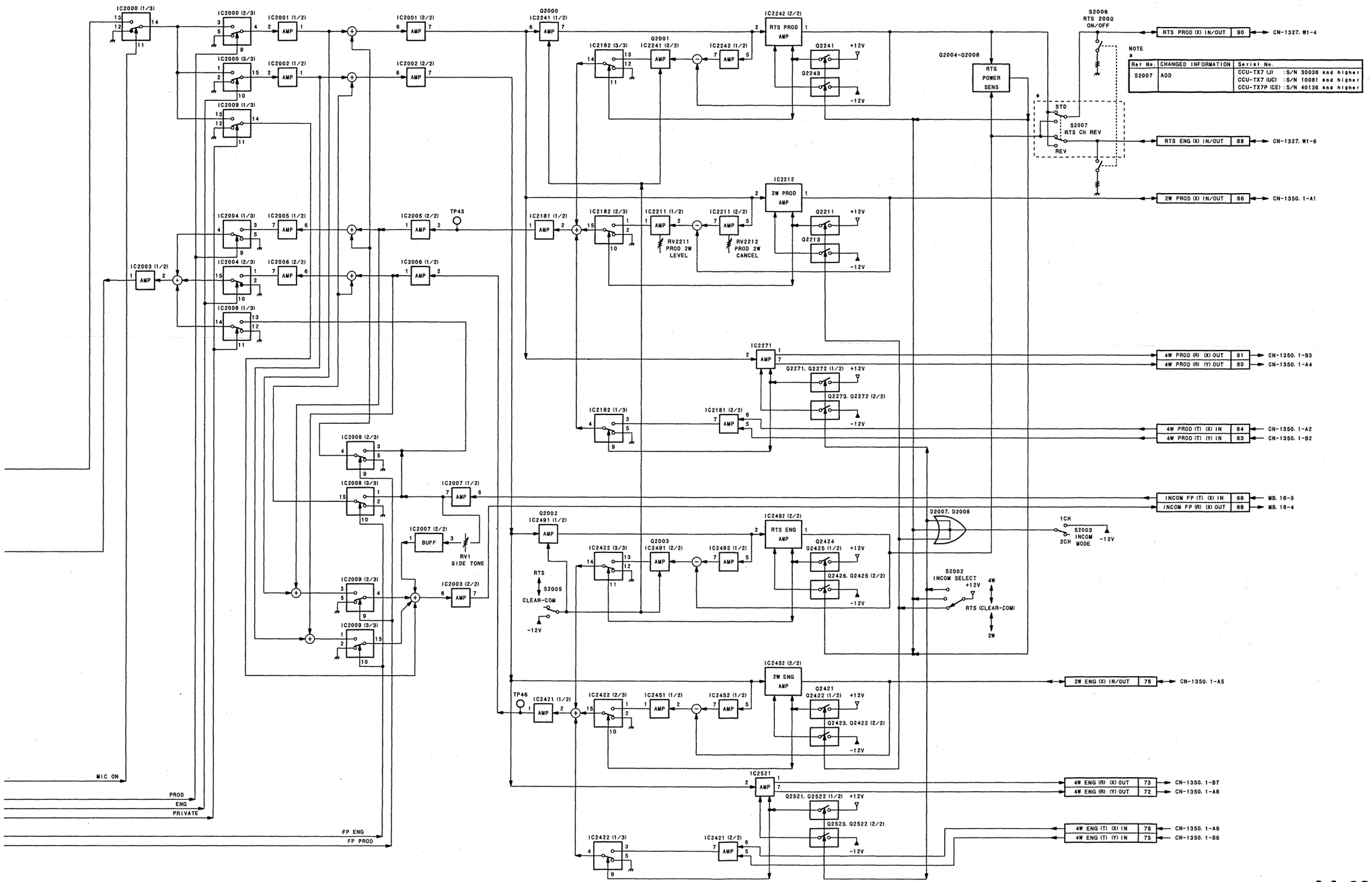
IC2000 (1/3)
IC2000 (2/3)
IC2000 (3/3)
IC2001 (1/2)
IC2001 (2/2)
IC2002 (1/2)
IC2002 (2/2)
IC2003 (1/2)
IC2003 (2/2)
IC2004 (1/3)
IC2004 (2/3)
IC2005 (1/2)
IC2005 (2/2)
IC2006 (2/2)
IC2006 (1/2)
IC2007 (1/2)
IC2007 (2/2)
IC2008 (1/3)
IC2008 (2/3)
IC2008 (3/3)
IC2009 (1/3)
IC2009 (2/3)
IC2009 (3/3)
TP43
TP46
BUFF
RV1 SIDE TONE
MIC ON
PROD
ENG
PRIVATE
FP ENG
FP PROD
Q2000 IC2241 (1/2)
IC2242 (2/2)
RTS PROD AMP
IC2182 (3/3)
Q2001 IC2241 (2/2)
IC2242 (1/2)
Q2241
Q2243
+12V
-12V
Q2004-Q2008
RTS POWER SENS
S2006 RTS 2000 ON/OFF
RTS PROD (X) IN/OUT 90
CN-1327. W1-4
NOTE *
Ref No. CHANGED INFORMATION Serial No.
S2007 ADD
CCU-TX7 (J) :S/N 30036 and higher
CCU-TX7 (UC) :S/N 10081 and higher
CCU-TX7P (CE) :S/N 40136 and higher
STD
S2007 RTS CH REV
REV
RTS ENG (X) IN/OUT 88
CN-1327. W1-6
IC2212
2W PROD AMP
2W PROD (X) IN/OUT 86
CN-1350. 1-A1
IC2181 (1/2)
IC2182 (2/3)
IC2211 (1/2)
IC2211 (2/2)
RV2211 PROD 2W LEVEL
RV2212 PROD 2W CANCEL
Q2211
Q2213
IC2271
Q2271. Q2272 (1/2)
Q2273. Q2272 (2/2)
4W PROD (R) (X) OUT 81
CN-1350. 1-B3
4W PROD (R) (Y) OUT 80
CN-1350. 1-A4
IC2182 (1/3)
IC2181 (2/2)
4W PROD (T) (X) IN 84
CN-1350. 1-A2
4W PROD (T) (Y) IN 83
CN-1350. 1-B2
INCOM FP (T) (X) IN 66
MB. 16-5
INCOM FP (R) (X) OUT 68
MB. 16-4
Q2002 IC2491 (1/2)
IC2492 (2/2)
RTS ENG AMP
IC2422 (3/3)
Q2003 IC2491 (2/2)
IC2492 (1/2)
Q2424
Q2425 (1/2)
Q2426. Q2425 (2/2)
RTS
S2005
CLEAR-COM
Q2007. Q2008
1CH
2CH
S2003 INCOM MODE
S2002 INCOM SELECT
RTS (CLEAR-COM)
4W
2W
IC2452 (2/2)
2W ENG AMP
2W ENG (X) IN/OUT 78
CN-1350. 1-A5
IC2421 (1/2)
IC2422 (2/3)
IC2451 (1/2)
IC2452 (1/2)
Q2421
Q2422 (1/2)
Q2423. Q2422 (2/2)
IC2521
Q2521. Q2522 (1/2)
Q2523. Q2522 (2/2)
4W ENG (R) (X) OUT 73
CN-1350. 1-B7
4W ENG (R) (Y) OUT 72
CN-1350. 1-A8
IC2422 (1/3)
IC2421 (2/2)
4W ENG (T) (X) IN 76
CN-1350. 1-A6
4W ENG (T) (Y) IN 75
CN-1350. 1-B6

AA-90 BLOCK

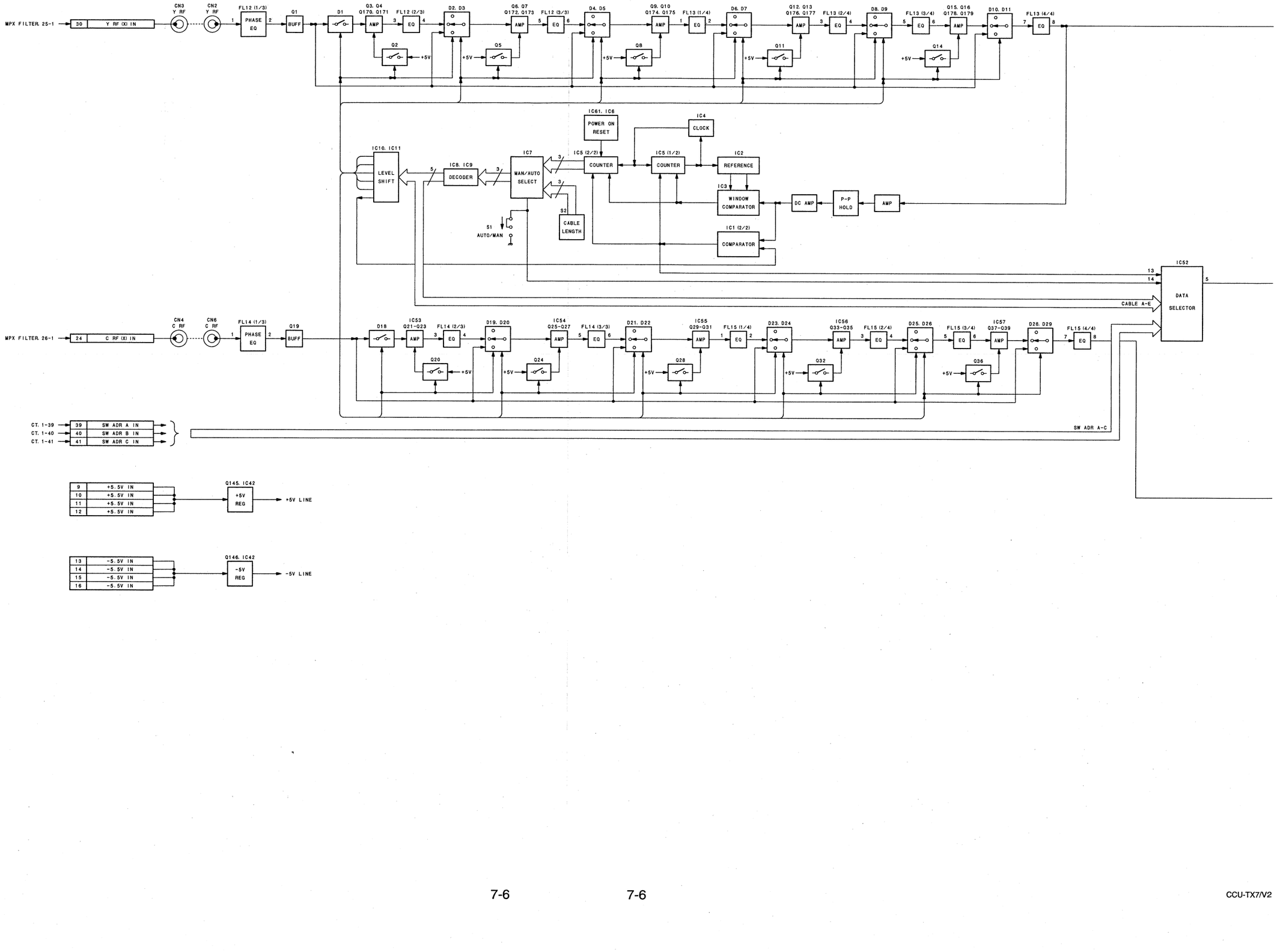
MPX FILTER 25-1
30 Y RF (X) IN
CN3 Y RF
CN2 Y RF
FL12 (1/3) PHASE EQ
Q1 BUFF
D1
Q3. Q4 Q170. Q171 AMP
FL12 (2/3) EQ
D2. D3
Q6. Q7 Q172. Q173 AMP
FL12 (3/3) EQ
D4. D5
Q9. Q10 Q174. Q175 AMP
FL13 (1/4) EQ
D6. D7
Q12. Q13 Q176. Q177 AMP
FL13 (2/4) EQ
D8. D9
FL13 (3/4) EQ
Q15. Q16 Q178. Q179 AMP
D10. D11
FL13 (4/4) EQ
Q2
Q5
Q8
Q11
Q14
+5V
IC61. IC6 POWER ON RESET
IC4 CLOCK
IC10. IC11 LEVEL SHIFT
IC8. IC9 DECODER
IC7 MAN/AUTO SELECT
IC5 (2/2) COUNTER
IC5 (1/2) COUNTER
IC2 REFERENCE
IC3 WINDOW COMPARATOR
DC AMP
P-P HOLD
AMP
S1 AUTO/MAN
S2 CABLE LENGTH
IC1 (2/2) COMPARATOR
IC52 DATA SELECTOR
CABLE A-E
MPX FILTER 26-1
24 C RF (X) IN
CN4 C RF
CN6 C RF
FL14 (1/3) PHASE EQ
Q19 BUFF
D18
IC53 Q21-Q23 AMP
FL14 (2/3) EQ
D19. D20
IC54 Q25-Q27 AMP
FL14 (3/3) EQ
D21. D22
IC55 Q29-Q31 AMP
FL15 (1/4) EQ
D23. D24
IC56 Q33-Q35 AMP
FL15 (2/4) EQ
D25. D26
FL15 (3/4) EQ
IC57 Q37-Q39 AMP
D28. D29
FL15 (4/4) EQ
Q20
Q24
Q28
Q32
Q36
CT. 1-39 39 SW ADR A IN
CT. 1-40 40 SW ADR B IN
CT. 1-41 41 SW ADR C IN
SW ADR A-C
9 +5.5V IN
10 +5.5V IN
11 +5.5V IN
12 +5.5V IN
Q145. IC42 +5V REG
+5V LINE
13 -5.5V IN
14 -5.5V IN
15 -5.5V IN
16 -5.5V IN
Q146. IC42 -5V REG
-5V LINE

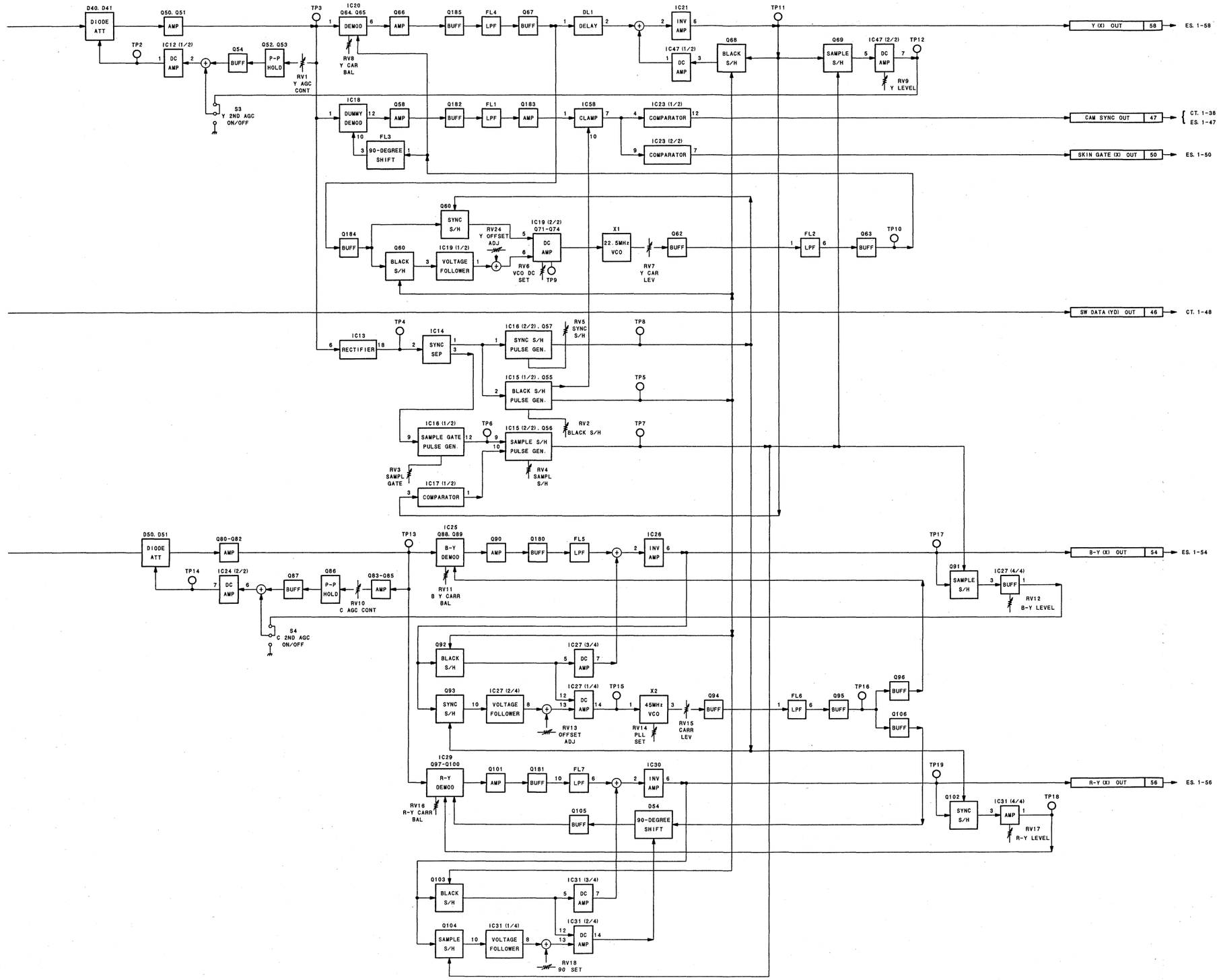
D40, D41
DIODE ATT
Q50, Q51
AMP
TP2
IC12 (1/2)
DC AMP
Q54
BUFF
Q52, Q53
P-P HOLD
RV1 Y AGC CONT
S3 Y 2ND AGC ON/OFF
TP3
IC20
Q64, Q65
DEMOD
RV8 Y CAR BAL
Q66
AMP
Q185
BUFF
FL4
LPF
Q67
BUFF
DL1
DELAY
IC21
INV AMP
IC47 (1/2)
DC AMP
Q68
BLACK S/H
TP11
Q69
SAMPLE S/H
IC47 (2/2)
DC AMP
RV9 Y LEVEL
TP12
Y (X) OUT 58
ES. 1-58
IC18
DUMMY DEMOD
Q58
AMP
FL3
90-DEGREE SHIFT
Q182
BUFF
FL1
LPF
Q183
AMP
IC58
CLAMP
IC23 (1/2)
COMPARATOR
IC23 (2/2)
COMPARATOR
CAM SYNC OUT 47
CT. 1-38
ES. 1-47
SKIN GATE (X) OUT 50
ES. 1-50
Q60
SYNC S/H
IC19 (2/2) Q71-Q74
DC AMP
RV24 Y OFFSET ADJ
RV6 VCO DC SET
TP9
X1
22.5MHz VCO
RV7 Y CAR LEV
Q62
BUFF
FL2
LPF
Q63
BUFF
TP10
Q184
BUFF
Q60
BLACK S/H
IC19 (1/2)
VOLTAGE FOLLOWER
SW DATA (YD) OUT 46
CT. 1-48
TP4
IC13
RECTIFIER
IC14
SYNC SEP
IC16 (2/2), Q57
SYNC S/H PULSE GEN.
RV5 SYNC S/H
TP8
IC15 (1/2), Q55
BLACK S/H PULSE GEN.
TP5
IC16 (1/2)
SAMPLE GATE PULSE GEN.
TP6
IC15 (2/2), Q56
SAMPLE S/H PULSE GEN.
RV2 BLACK S/H
TP7
RV3 SAMPL GATE
RV4 SAMPL S/H
IC17 (1/2)
COMPARATOR
D50, D51
DIODE ATT
Q80-Q82
AMP
TP13
IC25
Q88, Q89
B-Y DEMOD
Q90
AMP
Q180
BUFF
FL5
LPF
IC26
INV AMP
TP17
B-Y (X) OUT 54
ES. 1-54
TP14
IC24 (2/2)
DC AMP
Q87
BUFF
Q86
P-P HOLD
Q83-Q85
AMP
RV10 C AGC CONT
RV11 B Y CARR BAL
S4 C 2ND AGC ON/OFF
Q91
SAMPLE S/H
IC27 (4/4)
BUFF
RV12 B-Y LEVEL
Q92
BLACK S/H
IC27 (3/4)
DC AMP
Q93
SYNC S/H
IC27 (2/4)
VOLTAGE FOLLOWER
IC27 (1/4)
DC AMP
TP15
X2
45MHz VCO
Q94
BUFF
RV13 OFFSET ADJ
RV14 PLL SET
RV15 CARR LEV
FL6
LPF
Q95
BUFF
TP16
Q96
BUFF
Q106
BUFF
IC29
Q97-Q100
R-Y DEMOD
Q101
AMP
Q181
BUFF
FL7
LPF
IC30
INV AMP
TP19
R-Y (X) OUT 56
ES. 1-56
RV16 R-Y CARR BAL
Q105
BUFF
D54
90-DEGREE SHIFT
Q102
SYNC S/H
IC31 (4/4)
AMP
TP18
RV17 R-Y LEVEL
Q103
BLACK S/H
IC31 (3/4)
DC AMP
Q104
SAMPLE S/H
IC31 (1/4)
VOLTAGE FOLLOWER
IC31 (2/4)
DC AMP
RV18 90 SET

ES-20 BLOCK (1/2)

ES-20 BLOCK (1/2)

NOTE
*

	CHANGED INFORMATION	Serial No.
DU-33 BOARD	ADD	CCU-TX7 (J) :S/N 30061 and higher CCU-TX7 (UC :S/N 10601 and higher CCU-TX7P (CE) :S/N 40251 and higher

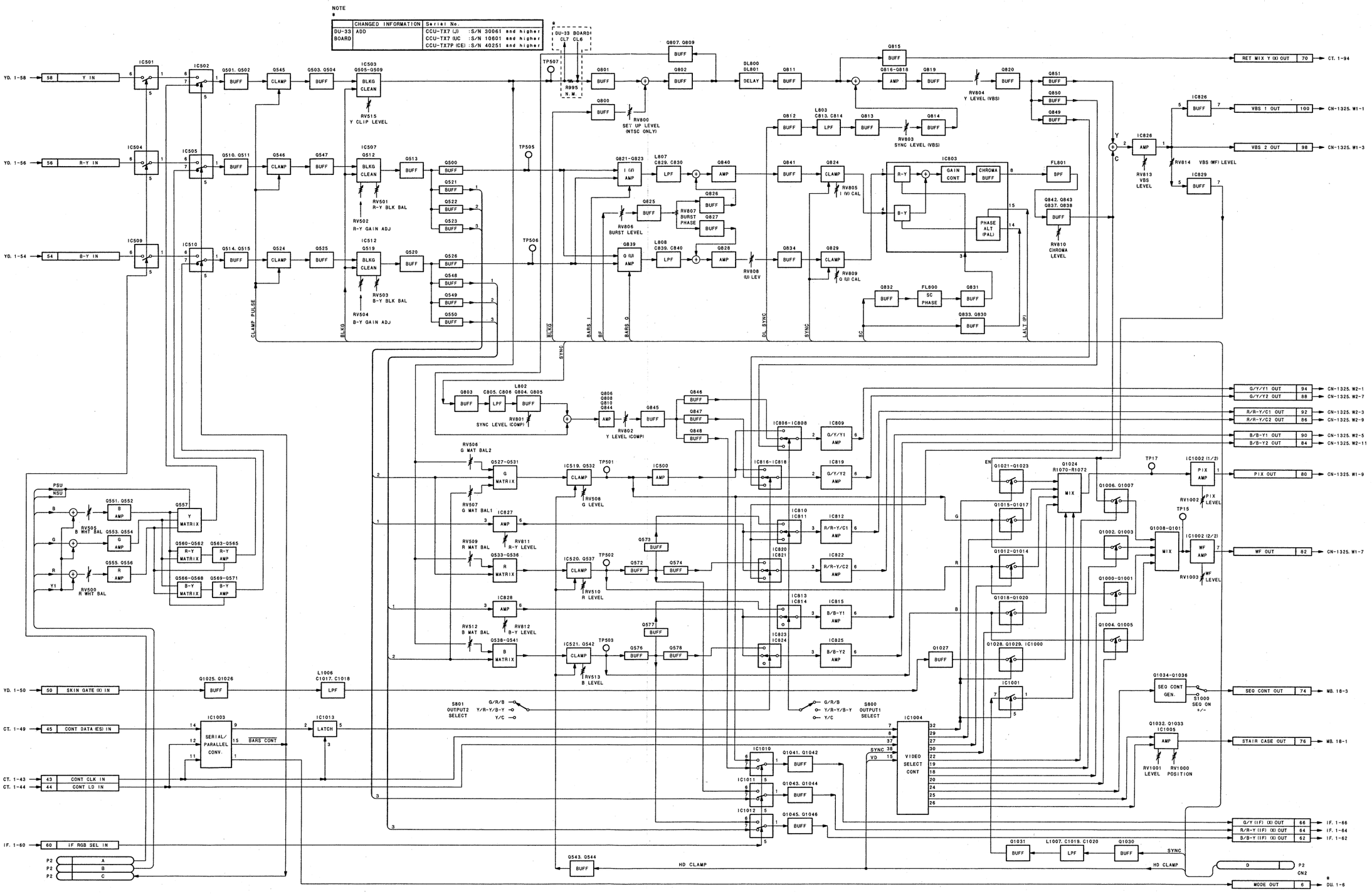

ES-20 BLOCK (1/2)

NOTE
*

	CHANGED INFORMATION	Serial No.
DU-33 BOARD	ADD	CCU-TX7 (J) :S/N 30061 and higher CCU-TX7 (UC) :S/N 10601 and higher CCU-TX7P (CE) :S/N 40251 and higher

*
DU-33
CL7 Y IN
CL6 Y OUT
CL8 A GND
CL10 BLKG OUT
CL11 BLKG IN
RV1 WIDE ID LEV.
IC1
CN1
+5V 1
GND 2
HD IN 3
VD IN 4
CLOCK IN 5
MODE IN 6
-5V 7
N.C. 8
TO ES-20. CN2

CN2
+5V 1
GND 2
HD OUT 3
VD OUT 4
CLOCK OUT 5
-5V 7
N.C. 8
TO DU-33. CN1
B P1
C P1
D P1

* CUT (NTSC)
* JUMPER (NTSC)

L3. C11 SC TRAP
Q6 BUFF
Q9 BACK PORCH CLAMP
Q7. Q8 CLAMP PULSE GEN
Q10. Q11 IC1 SYNC SEP
IC18 EXT SYNC, VR, LALTR, GENLOCK DRIVER, H COM, EXT SC, SC COM, INT HD, INT SC, CK EXT/INT
C57. L9 Y TRAP
Q17 AMP
Q18 BUFF
Q19. Q20 LIMITER
Q21 BUFF
IC17
IC29. IC30 H PHASE MMV
RV7 H PHASE
Q1-Q4 FLOATING AMP
Q5 AMP BUFF
CN-1325. W3-1 78 GENLOCK (X) IN
IC19
IC13 AMP
D11 LIMIT
RV4 SC FREQ
IC20
CP1 4FSC VCO
Q22 DRIVER
CP2 14MHz VCO
IC21 (1/2)
IC21 (2/2)
IC22 VR IN, LALTR IN, FLD, SYNC GEN., SYNC, H CON OUT, VD, CK IN, HD, 4FSC, BF, CK, SC, EXT, FH
IC1007 Q1038 +9V REG
IC1006 Q1037 +5V REG
IC1006 Q1039 -5V REG
17 +12.5V IN
18 +12.5V IN
9 +5.5V IN
10 +5.5V IN
11 +5.5V IN
12 +5.5V IN
13 -5.5V IN
14 -5.5V IN
15 -5.5V IN
16 -5.5V IN
TP3 +9V LINE
TP4 +5V LINE
TP5 -5V LINE
IC24
IC25
IC26 (1/2) IC27 (1/2) SC DUTY 50% SET
IC28 IC26 (2/2) IC12 (2/2) SC PHASE MMV
RV6 SC PHASE
RV5 SC-H PHASE
TP1
S3 SC 0/180
IC31 10. 12
S1 21H 20H 19H
S2 H. BLK
P1 A
IC12 CK, GENLOCK DRIVER, INT HD, H COM, VR, EXT SYNC, INT/EXT
IC11 CHU H PHASE MMV
RV1 CAM H PHASE
IC4 (1/4) BUFF
IC4 (2/4) BUFF
YD. 1-47 47 CAM SYNC IN
CT. 1-39 39 SW ADR A IN
CT. 1-40 40 SW ADR B IN
CT. 1-41 41 SW ADR C IN
IC8 WAVE SHAPER
Q12 BUFF
IC13 AMP
IC9. IC4 (3/4). IC4 (4/4) V RESET PULSE MMV
IC1009
IC34 MODE SELECTOR
IC5
IC34. IC35. IC36. IC37 CLAMP PULSE GEN.
Q23 BUFF
CLAMP PULSE
IC32 SYNC, BF, VD, HD, SYNCO, CK, TIMING PULSE GEN, BARE, XHBO-XHB3, VBL20, VBL19, BLKG, R, G, B, Y1, Y2, BF, I, Q, PSU, NSU
RV2 SYNC PHASE
RV3 SYNC WIDTH
IC2
IC11 (2/2) V RESET MMV
IC15
R96. C55 SYNC DELAY
IC3 (1/2) HD CLAMP PULSE GEN.
IC3 (2/2) HD CLAMP PULSE GEN.
DU-33 BOARD * CL11 CL10
N.M. IC10
IC10
L7 C51. C52 LPF
Q15. Q16 BUFF
L6 C43. C44 LPF
Q13. Q14 BUFF
IC829 SYNC AMP
Q836 BUFF
L811. C857 LPF
Q835 BUFF
LALT (P)
SYNC1
SYNC
VD
HD CLAMP
SKIN GATE BLKG
BLKG
CHROMA BLKG
DL SYNC
BARS R
BARS G
BARS B
BARS Y1
BARS Y2
BF
BARS I
BARS Q
PSU
NSU
SC

V RESET (CCU) OUT 34 → CT. 1-34
VD OUT 36 → CT. 1-36, IF. 36
HD OUT 35 → CT. 1-35, IF. 35
BLKG OUT 37 → CT. 1-37, IF. 37
SYNC (X) OUT 96 → CN-1325. W1-5
H CONT OUT 48 → AA. 1-48
V RESET (CAM) OUT 33 → CT. 1-33
SW DATA (ES) OUT 46 → CT. 1-46

ES-20 BLOCK (2/2)

SDI-44 BLOCK (1/2) DXBK-701

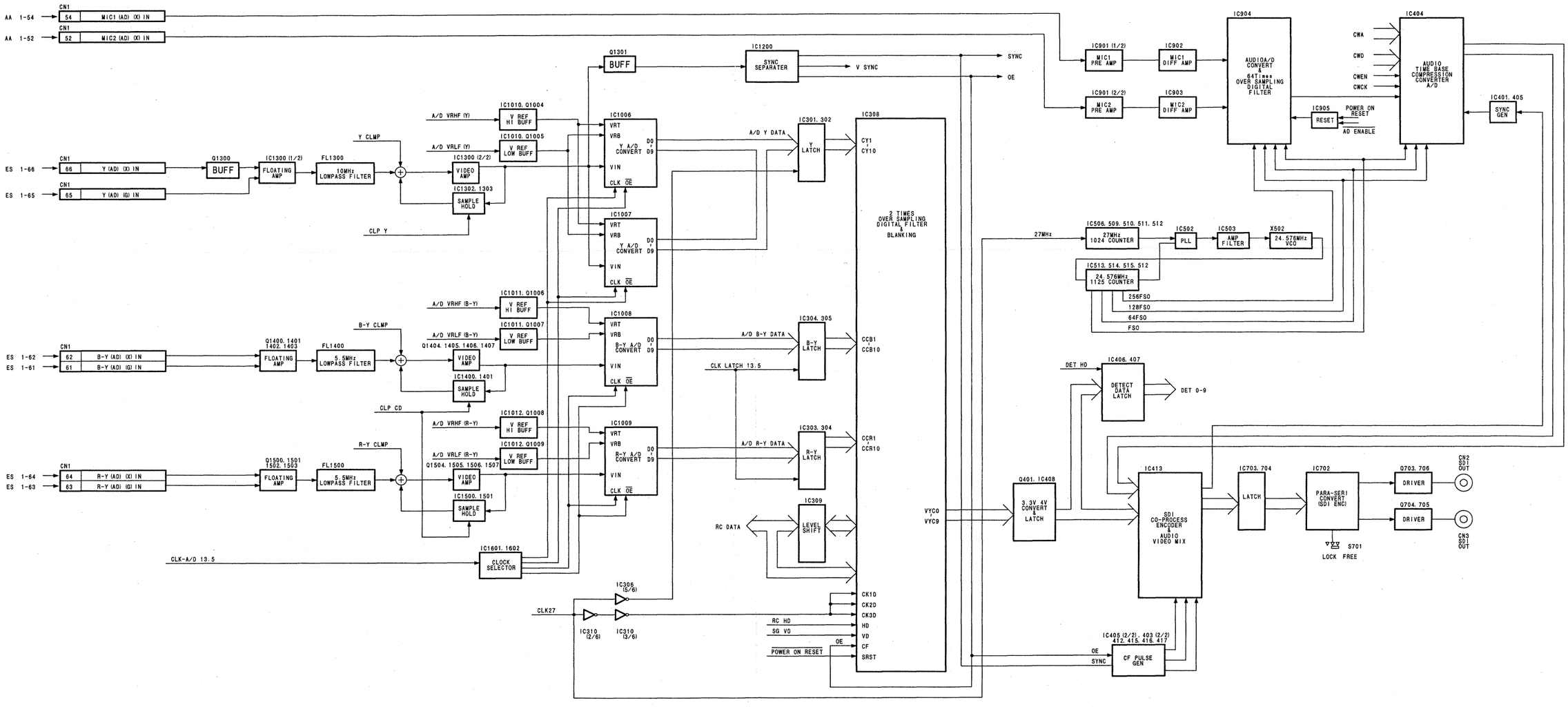

SDI-44 BLOCK (1/2)

DXBK-701

7-10

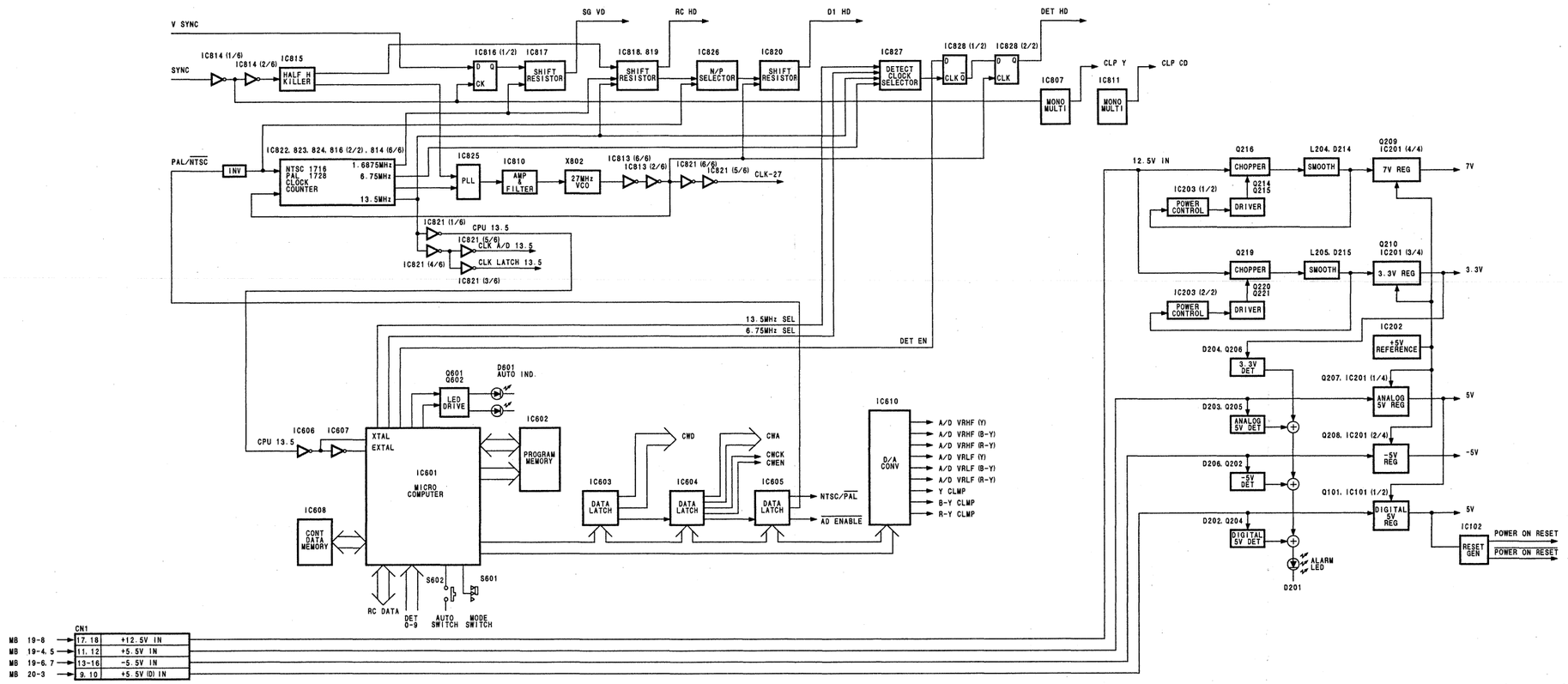

SDI-44 BLOCK (2/2)

DXBK-701

SECTION 8
SCHEMATIC DIAGRAMS AND BOARD ILLUSTRATIONS

INDEX

Name	page Board	Schematic
CT-181	8-2	8-4 to 8-7
AA-90	8-8	8-10 to 8-15
YD-26	8-16	8-18 to 8-21
ES-20	8-22	8-24 to 8-30
AU-234	8-32	8-33
CN-1325	8-34	8-38 to 8-39
CN-1327	8-35	8-38 to 8-39
CN-1328	8-35	8-38 to 8-39
CN-1350	8-35	8-38 to 8-39
CN-1351	8-35	8-38 to 8-39
IO-140	8-35	8-38 to 8-39
MB-693	8-36	8-38 to 8-39
POWER SUPPLY	—	8-40 to 8-44
SW-892 (COU-TX7)	8-46	8-47
SDI-44 (DXBK-701)	8-48	8-50 to 8-60

8-1

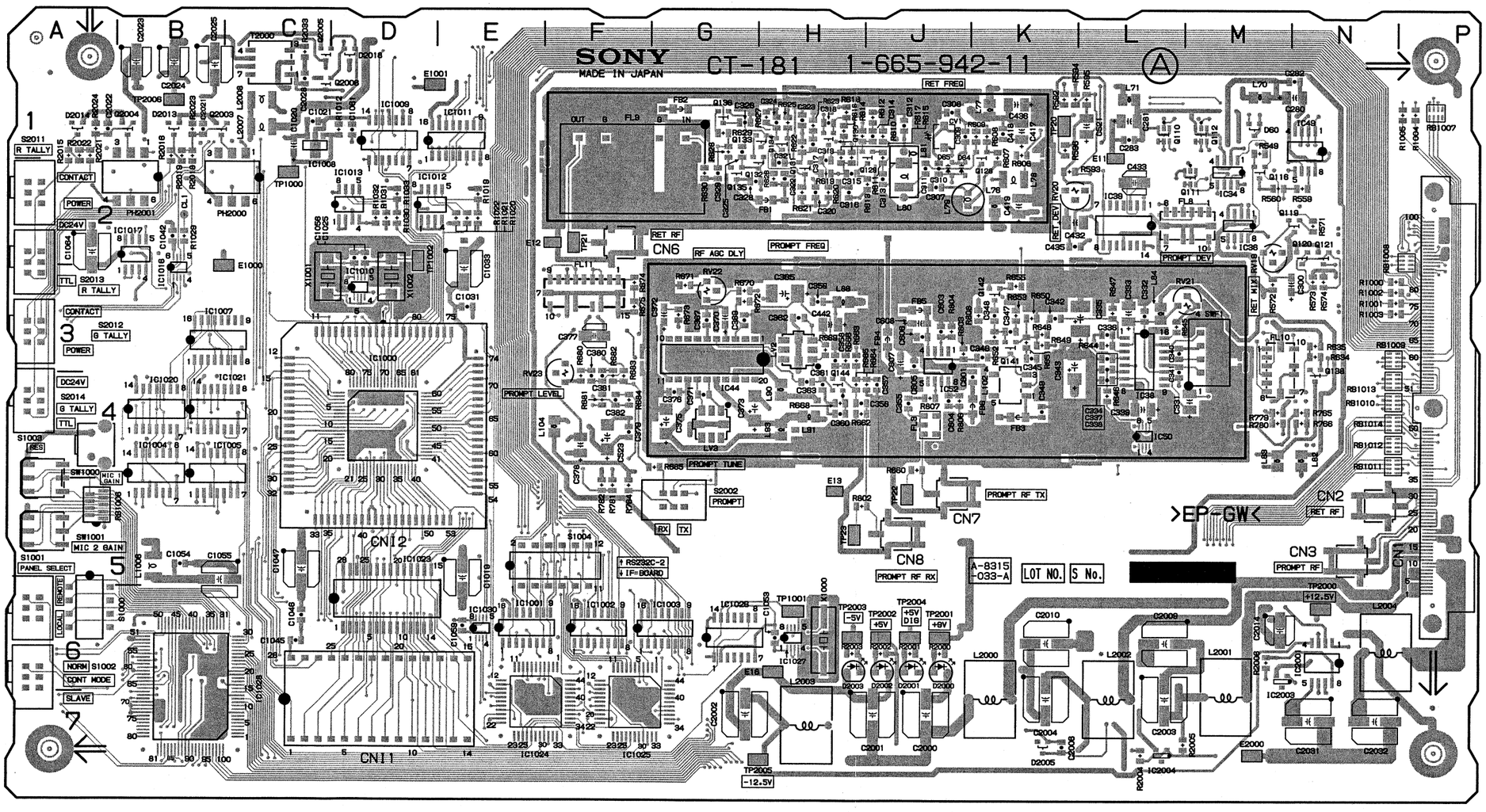

CT-181 -A SIDE-
SUFFIX: -11

*: B SIDE

CNI1	C7	LV2	H3	*RB1001	C4
		LV3	G4	*RB1002	C4
CN1	P4	L70	M1	*RB1003	D5
CN2	N5	L71	L1	*RB1004	D5
CN3	N5	*L74	N2	*RB1005	A6
CN6	F2	*L75	N3	RB1006	A5
CN7	J5	L76	K2	RB1007	P1
CN8	J5	L77	K1	RB1008	P2
		L78	K2	RB1009	N3
CV1	J1	L79	J2	RB1010	N4
		L80	J2	RB1011	N4
D60	M1	L81	J2	RB1012	N4
D61	M2	L82	N4	RB1013	N4
D64	J2	L83	M4	RB1014	N4
D65	J2	L84	L3	*RB1015	E4
D2000	J6	L88	H3	*RB1016	E4
D2001	J6	L90	H4	*RB1017	D3
D2002	J6	L91	H4	RV19	M2
D2003	H6	L93	H4	RV20	K2
*D2004	L7	*L101	F4	RV21	M3
D2005	K7	L102	K4	RV22	G3
*D2007	N6	L104	F4	RV23	F3
*D2008	N6	*L105	F4	SWF1	M3
*D2009	A1	*L1000	E6		
*D2010	B1	*L1001	F6	SW1000	A4
*D2011	A2	*L1002	F6	SW1001	A5
*D2012	B2	*L1003	D1		
D2013	B1	*L1004	D2	S1000	A6
D2014	A1	*L1005	E3	S1001	A6
*D2015	B1	L1006	B5	S1002	A6
*D2016	B1	*L1007	A2	S1004	E5
*D2017	C1	L2000	K7	S2002	G5
D2018	D1	L2001	M7	S2011	A2
		L2002	L7	S2012	A3
E11	L1	L2003	H7	S2013	A2
E12	F2	L2004	P6	S2014	A4
E13	H5	L2007	C1		
E16	H6	L2008	C1	TP20	K1
E1000	C2			TP21	F2
E1001	D1	PH2000	C2	TP22	J5
E2000	M7	PH2001	B2	TP23	H5
				TP1000	C2
FB1	H2	Q110	L1	TP1001	H6
FB2	G1	Q111	M2	TP1002	D2
FB3	K4	Q112	M1	TP2000	N6
FB4	J3	Q116	M2	TP2001	J6
FB5	J3	*Q117	M1	TP2002	J6
FB6	K4	*Q118	N3	TP2003	H6
		Q119	N2	TP2004	J6
FL3	J4	Q120	N2	TP2005	H7
FL8	M2	Q121	N2	TP2006	B1
FL9	G1	*Q122	M2	T2000	C1
FL10	M3	*Q123	M2		
FL11	F3	*Q126	K1	W1	
		*Q127	K1	W2	
IC34	M2	Q128	K1		
IC36	M2	Q129	J1	X1000	H6
IC38	L3	Q130	H1	X1001	C3
IC39	L2	Q131	H2		
*IC40	F3	Q132	H2		
*IC41	F4	Q133	H1		
IC44	G3	Q134	H1		
IC49	N1	Q135	G2		
IC50	L4	Q136	G1		
IC52	J3	Q138	N3		
IC1000	D4	*Q139	N3		
IC1001	E6	*Q140	M3		
IC1002	F6	Q141	K3		
IC1003	G6	Q142	K3		
IC1004	B4	Q144	H4		
IC1005	B4	*Q155	L2		
IC1007	B3	*Q156	H1		
IC1008	C1	*Q157	N4		
IC1009	D1	*Q158	N4		
IC1010	D3	*Q161	J4		
IC1011	E1	*Q162	J4		
IC1012	D2	*Q163	H4		
IC1013	D2	*Q164	G4		
IC1016	B3	*Q165	M4		
IC1017	B2	*Q166	M4		
IC1020	B4	*Q167	F5		
IC1021	B4	*Q168	F5		
IC1023	D6	*Q188	F4		
IC1024	E7	*Q190	E2		
IC1025	F7	*Q191	E2		
IC1026	G6	*Q2000	L7		
IC1027	H6	*Q2001	K7		
IC1028	B6	*Q2002	N6		
IC1029		Q2003	B1		
IC1030	E6	Q2004	B1		
*IC2000	L7	Q2005	C1		
IC2001	N6	Q2006	C1		
*IC2002	B1	*Q2007	N7		
IC2003	M6				

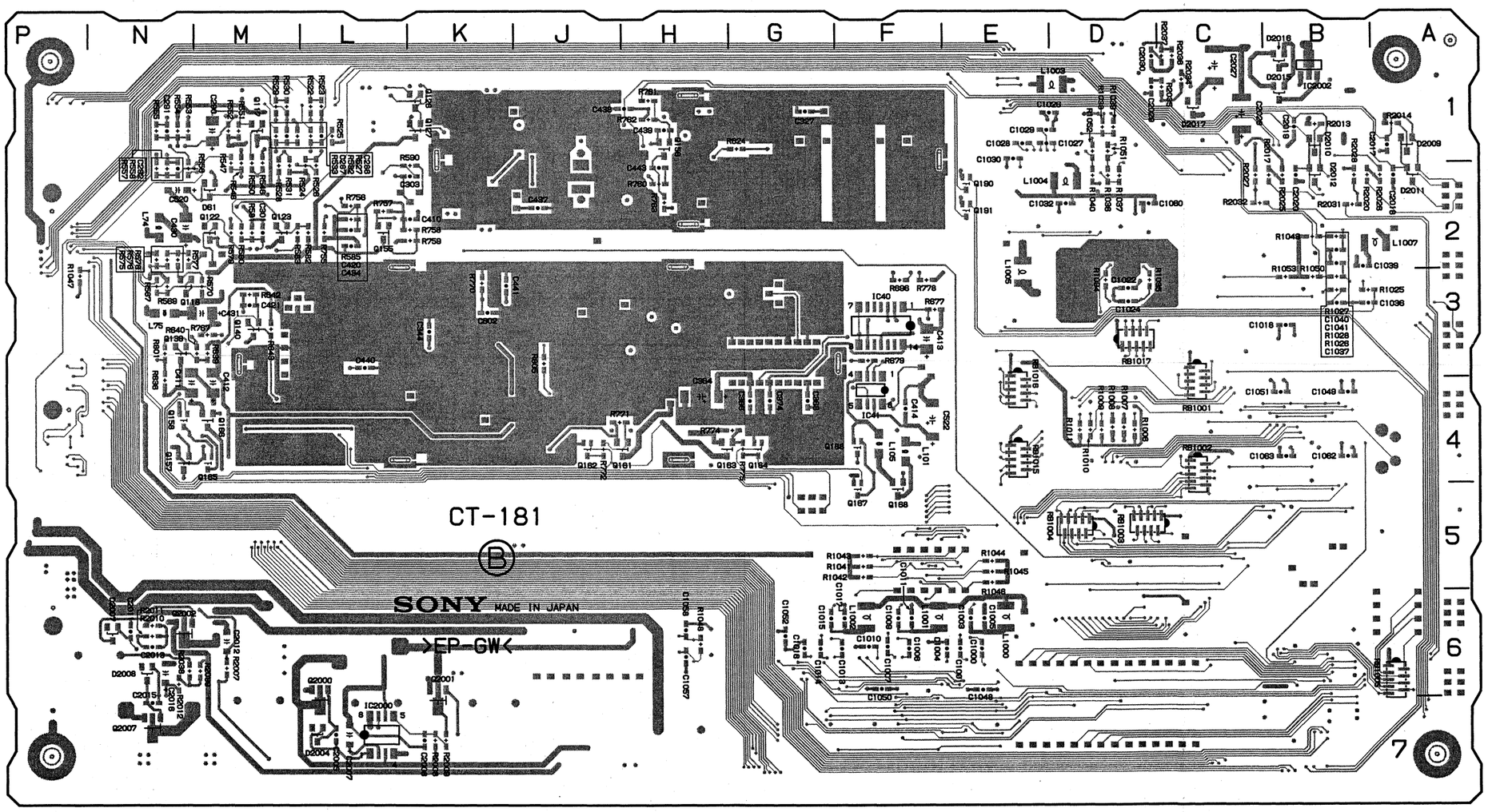

CT-181 -B SIDE-
SUFFIX: -11

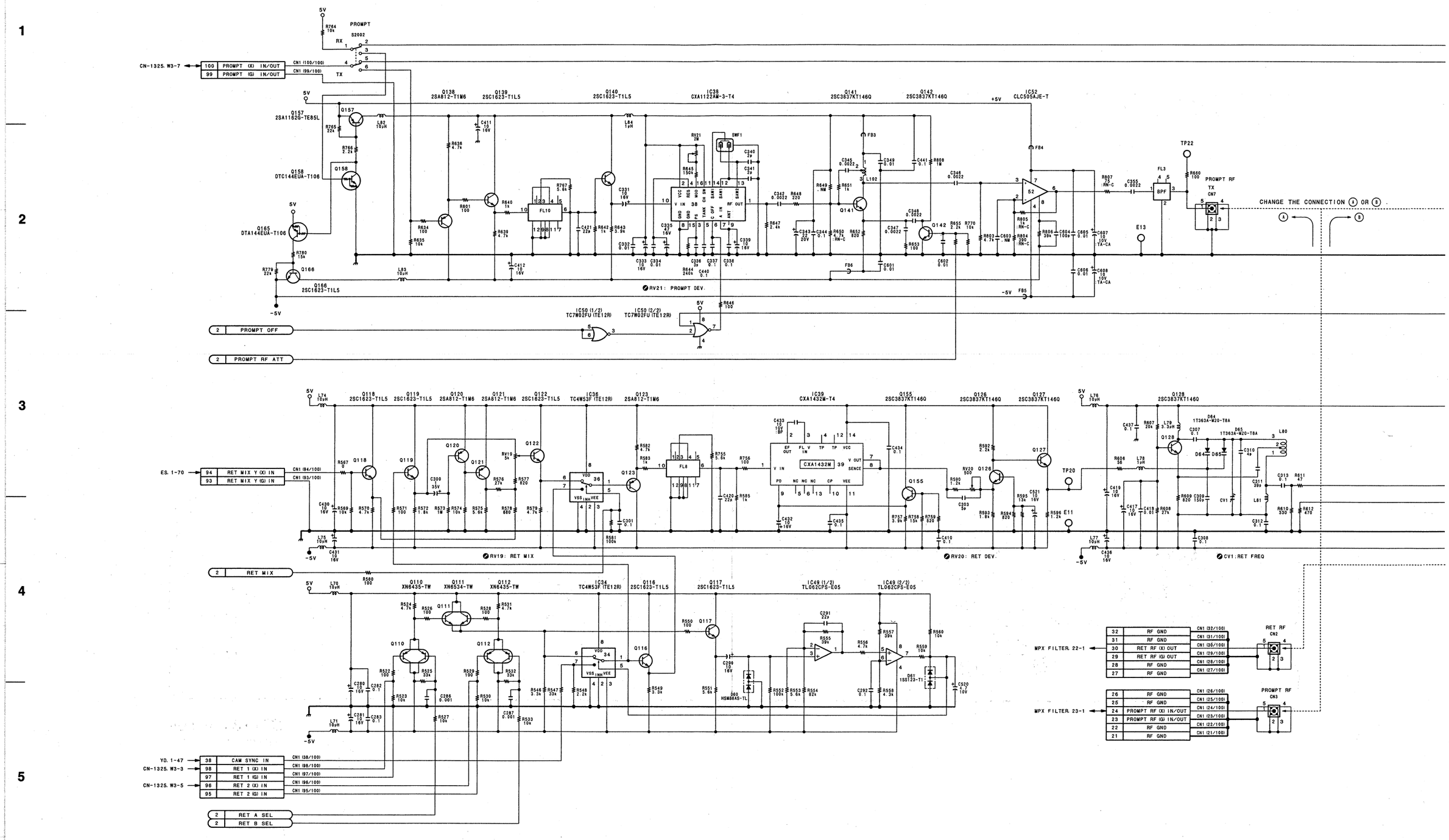
PROMPT
S2002
CN-1325. W3-7
100 PROMPT (X) IN/OUT
99 PROMPT (G) IN/OUT
Q157 2SA1162G-TE85L
Q158 DTC144EUA-T106
Q165 DTA144EUA-T106
Q166 2SC1623-T1L5
Q138 2SA812-T1M6
Q139 2SC1623-T1L5
Q140 2SC1623-T1L5
IC38 CXA1122AM-3-T4
Q141 2SC3837KT146Q
Q142 2SC3837KT146Q
IC52 CLC505AJE-T
TP22
PROMPT RF
CHANGE THE CONNECTION A OR B
RV21: PROMPT DEV.
IC50 (1/2) TC7W02FU (TE12R)
IC50 (2/2) TC7W02FU (TE12R)
PROMPT OFF
PROMPT RF ATT
ES. 1-70
94 RET MIX Y (X) IN
93 RET MIX Y (G) IN
RV19: RET MIX
RV20: RET DEV.
CV1: RET FREQ
RET MIX
Q110 XN6435-TW
Q111 XN6534-TW
Q112 XN6435-TW
IC34 TC4W53F (TE12R)
Q116 2SC1623-T1L5
Q117 2SC1623-T1L5
IC49 (1/2) TL062CPS-E05
IC49 (2/2) TL062CPS-E05
MPX FILTER 22-1
MPX FILTER 23-1
RET RF
PROMPT RF
YD. 1-47
CN-1325. W3-3
CN-1325. W3-5
38 CAM SYNC IN
98 RET 1 (X) IN
97 RET 1 (G) IN
96 RET 2 (X) IN
95 RET 2 (G) IN
RET A SEL
RET B SEL

CCU-TX7/V2

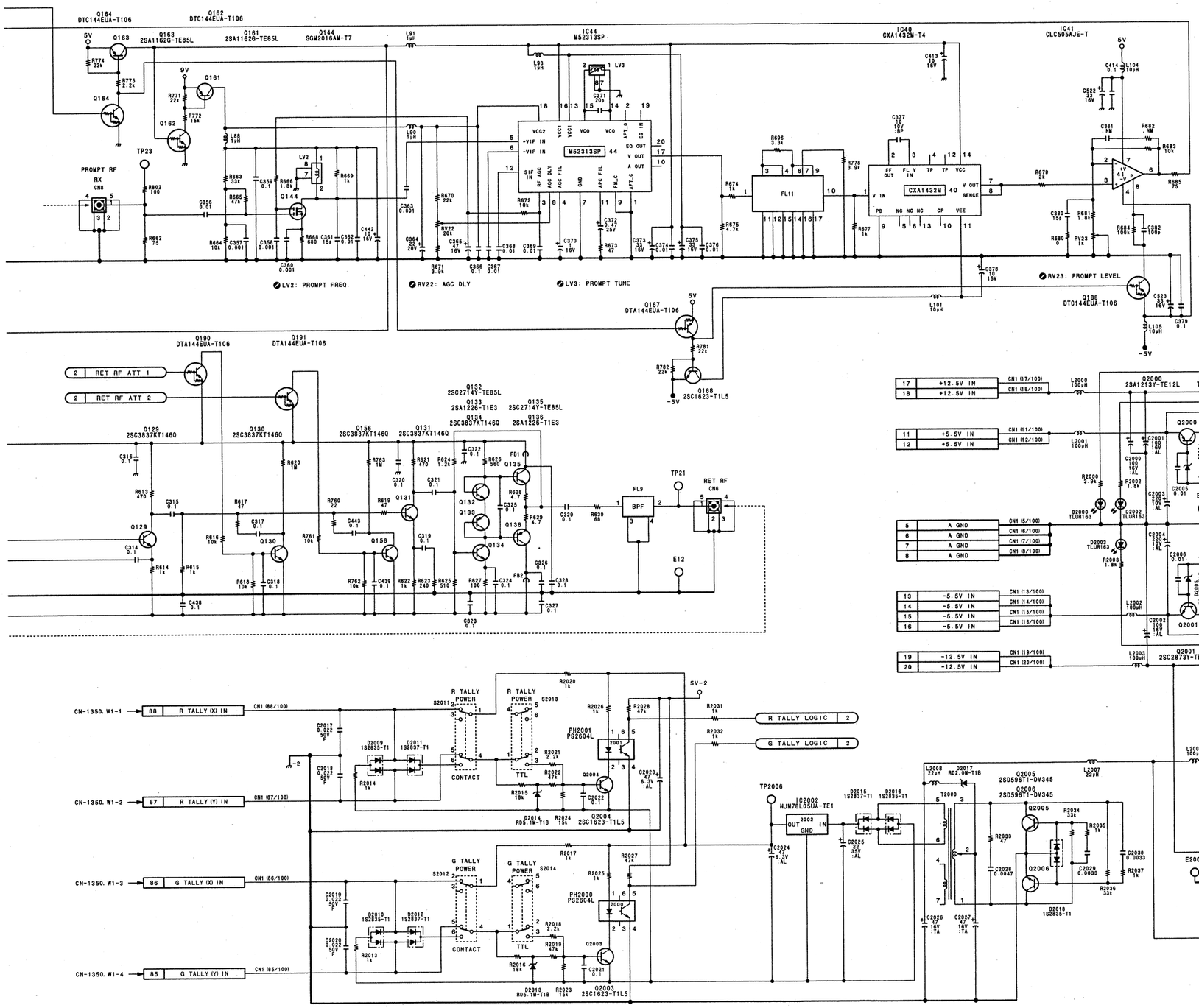

NOTE
, NM:NO MOUNT

CT-181 (1/2)
B-CCUTX7-CT181/M

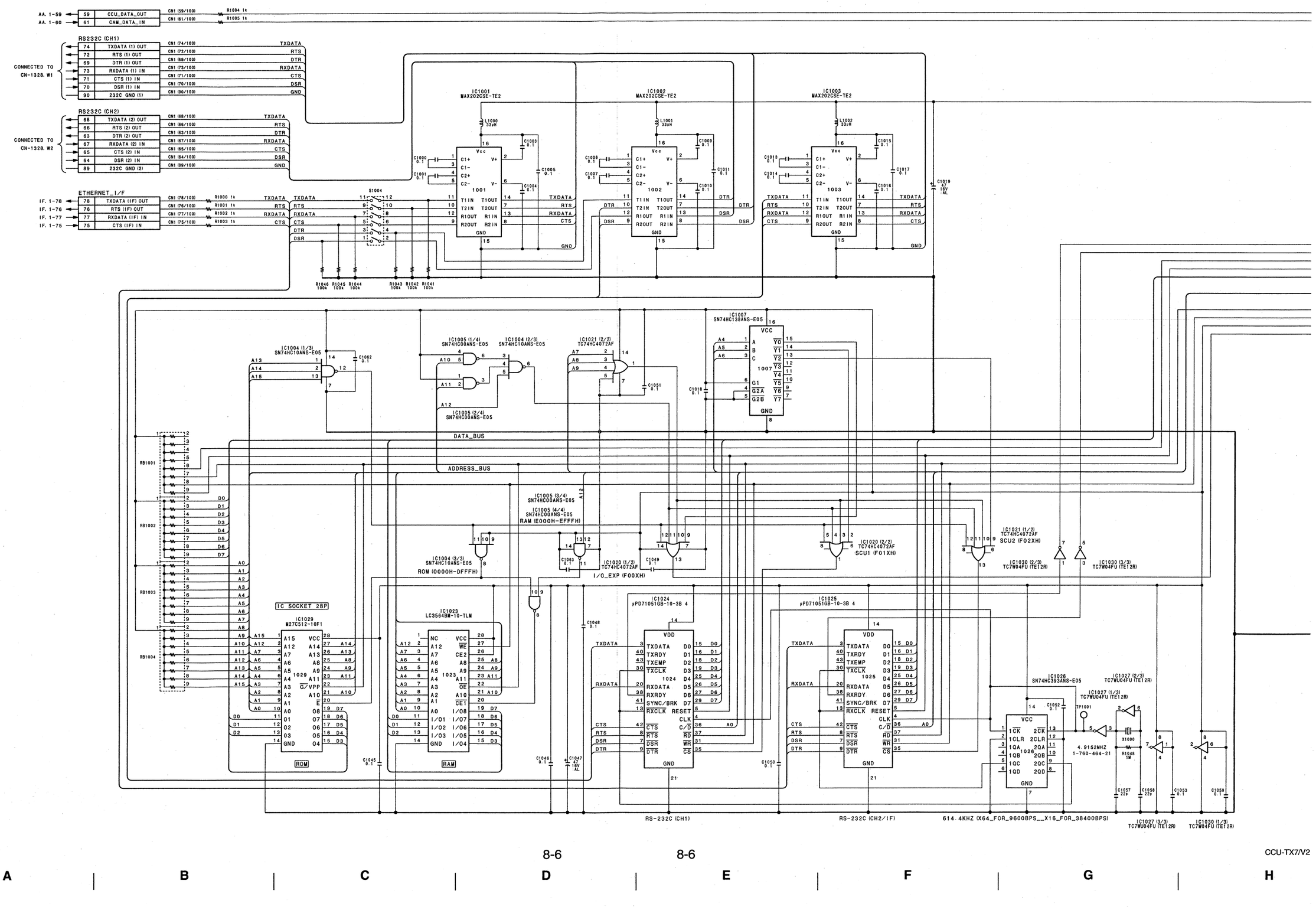
AA. 1-59
AA. 1-60
59 CCU_DATA_OUT
61 CAM_DATA_IN
RS232C (CH1)
CONNECTED TO CN-1328. W1
74 TXDATA (1) OUT
72 RTS (1) OUT
69 DTR (1) OUT
73 RXDATA (1) IN
71 CTS (1) IN
70 DSR (1) IN
90 232C GND (1)
RS232C (CH2)
CONNECTED TO CN-1328. W2
68 TXDATA (2) OUT
66 RTS (2) OUT
63 DTR (2) OUT
67 RXDATA (2) IN
65 CTS (2) IN
64 DSR (2) IN
89 232C GND (2)
ETHERNET_I/F
IF. 1-78
IF. 1-76
IF. 1-77
IF. 1-75
78 TXDATA (IF) OUT
76 RTS (IF) OUT
77 RXDATA (IF) IN
75 CTS (IF) IN
IC1001 MAX202CSE-TE2
IC1002 MAX202CSE-TE2
IC1003 MAX202CSE-TE2
S1004
DATA_BUS
ADDRESS_BUS
IC1004 (1/3) SN74HC10ANS-E05
IC1005 (1/4) SN74HC00ANS-E05
IC1004 (2/3) SN74HC10ANS-E05
IC1005 (2/4) SN74HC00ANS-E05
IC1021 (2/2) TC74HC4072AF
IC1007 SN74HC138ANS-E05
IC1005 (3/4) SN74HC00ANS-E05
IC1005 (4/4) SN74HC00ANS-E05 RAM (E000H-EFFFH)
IC1004 (3/3) SN74HC10ANS-E05 ROM (0000H-DFFFH)
IC1030 (1/2) TC74HC4072AF I/O_EXP (F00XH)
IC1020 (2/2) TC74HC4072AF SCU1 (F01XH)
IC1021 (1/2) TC74HC4072AF SCU2 (F02XH)
IC1030 (2/3) TC7W04FU (TE12R)
IC1030 (3/3) TC7W04FU (TE12R)
IC SOCKET 28P
IC1029 M27C512-10F1
ROM
IC1023 LC3564BM-10-TLM
RAM
IC1024 μPD71051GB-10-3B 4
IC1025 μPD71051GB-10-3B 4
IC1026 SN74HC393ANS-E05
IC1027 (1/3) TC7WU04FU (TE12R)
IC1027 (2/3) TC7WU04FU (TE12R)
IC1027 (3/3) TC7WU04FU (TE12R)
IC1030 (1/3) TC7W04FU (TE12R)
TP1001
X1000
4.9152MHZ 1-760-464-21
RB1001
RB1002
RB1003
RB1004
RS-232C (CH1)
RS-232C (CH2/IF)
614.4KHZ (X64_FOR_9600BPS__X16_FOR_38400BPS)

CT-181 (2/2)

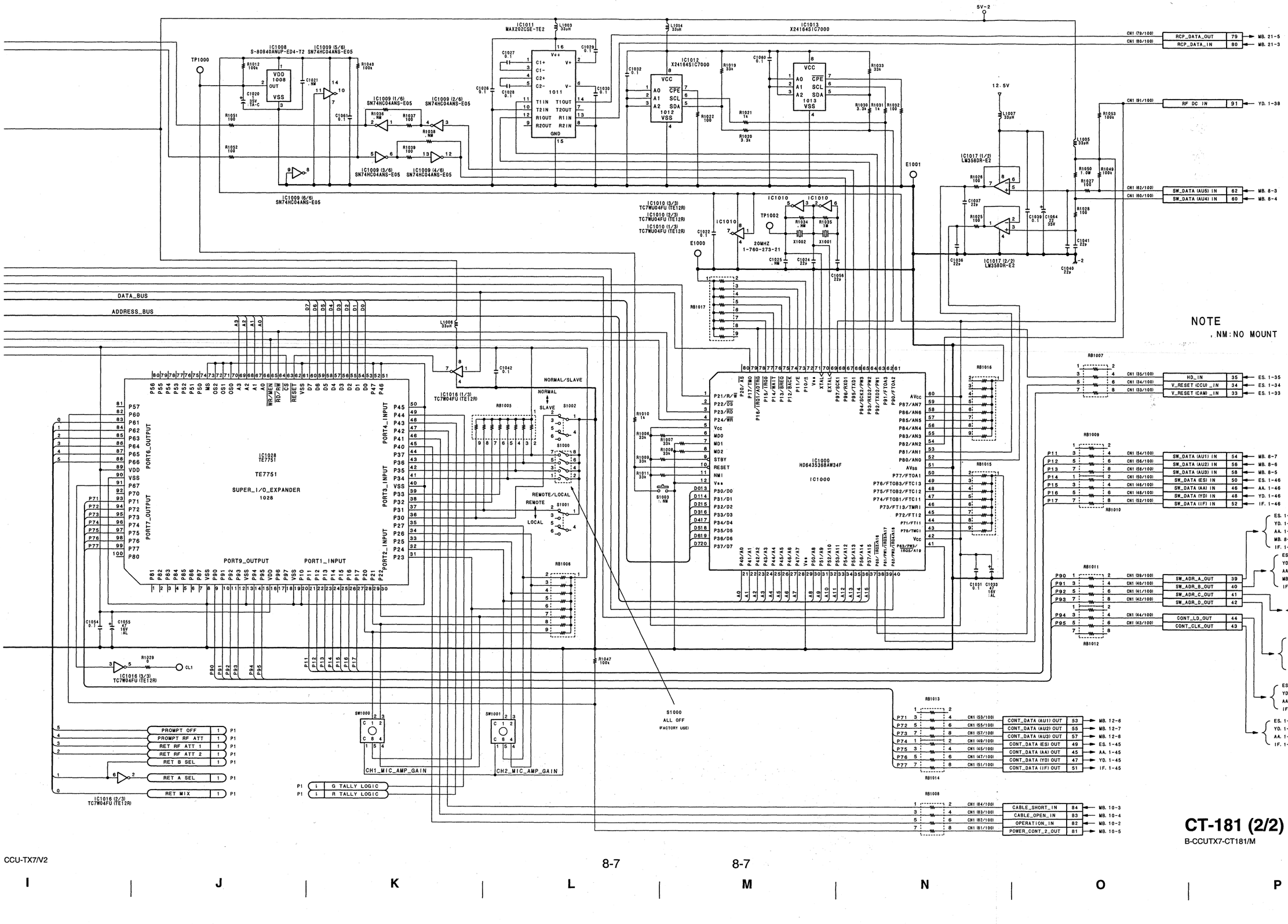

CCU-TX7/V2

8-7 8-7

CT-181 (2/2)
B-CCUTX7-CT181/M

CCU-TX7 (J) : S/N 30036 and higher
CCU-TX7 (UC) : S/N 10181 and higher
CCU-TX7 (CE) : S/N 40136 and higher

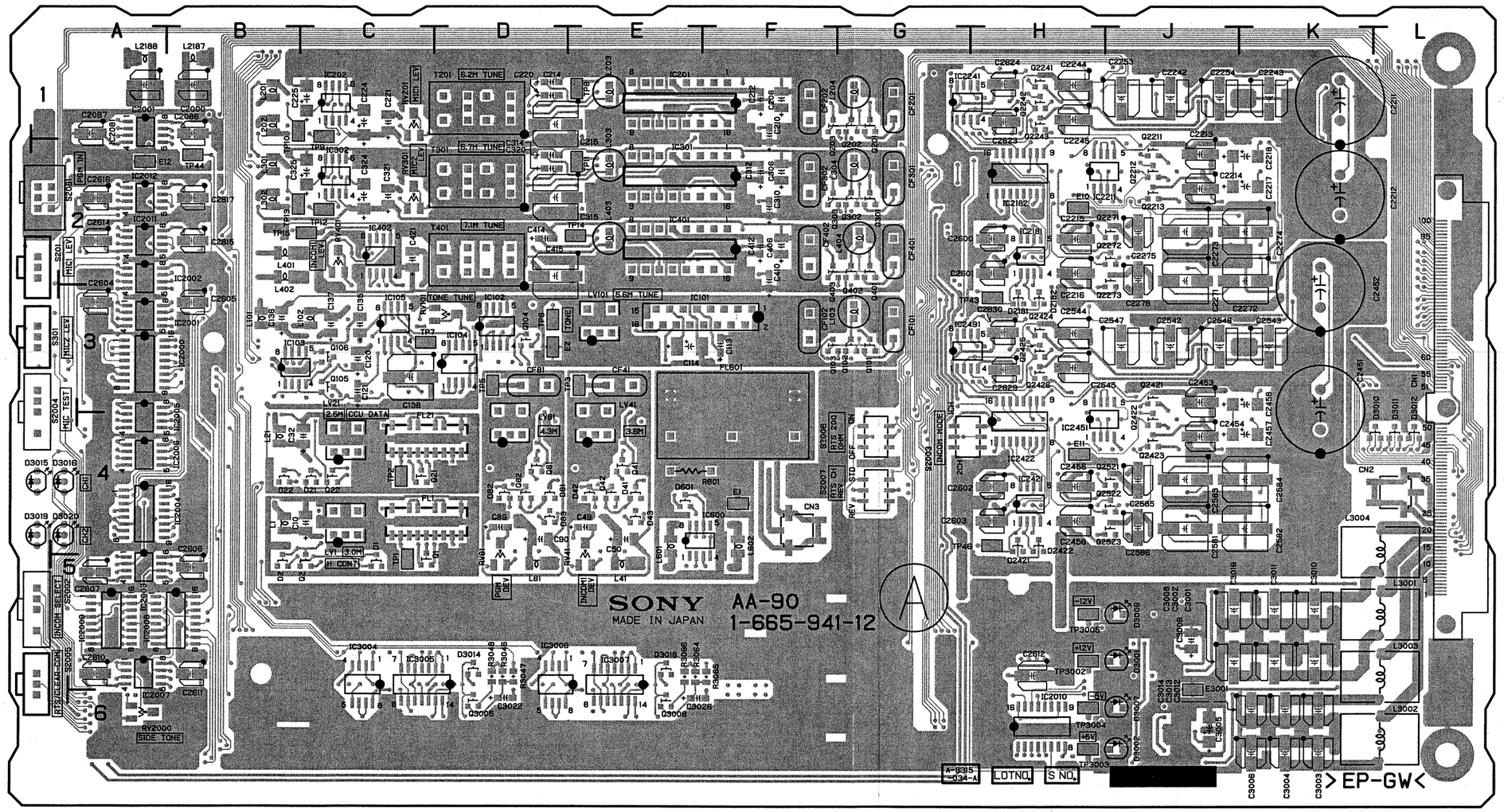

AA-90 -A SIDE-
SUFFIX: -12

*: B SIDE

CF41	E3	IC2012	A2	Q2004	*K1
CF81	D3	IC2081	A1	Q2005	*G2
CF101	G3	IC2181	H2	Q2006	*G2
CF102	F3	IC2182	H2	Q2007	*H2
CF201	G1	IC2211	H2	Q2008	*K2
CF202	F1	IC2212	*J2	Q2211	J2
CF301	G2	IC2241	G1	Q2212	J2
CF302	F2	IC2242	*J1	Q2213	J2
CF401	G2	IC2271	*J2	Q2241	H1
CF402	F2	IC2421	H4	Q2242	H1
		IC2422	H4	Q2243	H1
CN1	L3	IC2451	H4	Q2271	J2
CN2	L4	IC2452	*J3	Q2272	J2
CN3	F4	IC2491	G3	Q2273	J2
		IC2492	*J3	Q2421	J3
D1	C5	IC2521	*J4	Q2422	J4
D2	B5	IC3001	*J6	Q2423	J4
D21	C4	IC3002	*J5	Q2424	H3
D22	B4	IC3003	*L3	Q2425	H3
D23	*B4	IC3004	C5	Q2426	H3
D41	E4	IC3005	C5	Q2521	J4
D42	E4	IC3006	D5	Q2522	J4
D43	E4	IC3007	E5	Q2523	J4
D81	D4	IC3008	*J6	Q3001	*K6
D82	D4			Q3002	*K5
D83	D4	LV1	C4	Q3003	*K6
D601	E4	LV21	C4	Q3004	*K5
D2000	*A4	LV41	E4	Q3005	D6
D2001	*A5	LV81	D4	Q3006	*D6
D2002	*B5	LV101	E3	Q3007	*D5
D2003	*B5			Q3008	E6
D2005	*G1	L1	B4	Q3009	*E6
D2006	*G3	L21	B4	Q3010	*E5
D2007	*H3	L41	E5		
D2008	*H4	L81	D5	RV41	E4
D2081	*B1	L101	B3	RV81	D4
D2082	*B1	L102	C3	RV101	D3
D2181	H3	L103	G3	RV201	C1
D2182	H3	L201	B1	RV301	C2
D2421	H4	L202	B1	RV401	C2
D2422	H4	L203	E1	RV2000	A6
D3001	J5	L204	G1		
D3002	J6	L301	B2	S201	A2
D3003	*K6	L302	B2	S301	A3
D3005	*J5	L303	E2	S2002	A5
D3006	J5	L304	G2	S2003	G4
D3007	J6	L401	B2	S2004	A3
D3008	*K6	L402	B2	S2005	A5
D3009	*J5	L403	E2	S2006	G4
D3010	L4	L404	G2	S2007	G4
D3011	L4	L601	E4	S2081	A2
D3012	L4	L602	F4		
D3013	*C5	L2181	*H2	TP1	C5
D3014	D5	L2182	*H2	TP2	C4
D3015	A4	L2183	*G2	TP3	E3
D3017	*D5	L2184	*G2	TP5	D3
D3018	E5	L2185	*G4	TP6	D3
D3019	A4	L2186	*G4	TP7	C3
		L2187	B1	TP8	E1
E1	F4	L2188	A1	TP9	C1
E2	D3	L2189	*H5	TP10	B1
E10	H2	L2421	*H4	TP11	E2
E11	H4	L2422	*H4	TP12	C2
E12	A2	L3001	L5	TP13	B2
E3001	J5	L3002	L6	TP14	E2
		L3003	L5	TP15	C2
FL1	C4	L3004	L4	TP43	H3
FL21	C4			TP44	B2
FL601	E4	Q1	C5	TP46	H4
		Q2	C5	TP3002	H5
IC101	F3	Q17	*C3	TP3003	H6
IC102	D3	Q21	C4	TP3004	H6
IC103	B3	Q22	C4	TP3005	H5
IC104	D3	Q41	E4		
IC105	C3	Q42	E4	T201	D1
IC201	F1	Q81	D4	T301	D2
IC202	C1	Q82	D4	T401	D2
IC301	F2	Q101	G3		
IC302	C2	Q102	G3		
IC401	F2	Q103	F3		
IC402	C2	Q104	D3		
IC600	E4	Q201	G1		
IC2000	A3	Q202	G1		
IC2001	A3	Q203	F1		
IC2002	A2	Q204	*D1		
IC2003	A5	Q301	G2		
IC2004	A4	Q302	G2		
IC2005	A4	Q303	F2		
IC2006	A4	Q304	*D2		
IC2007	A5	Q401	G2		
IC2008	B5	Q402	G2		
IC2009	A5	Q403	F2		
IC2010	H6	Q2000	*G1		
IC2011	A2	Q2001	*H1		
		Q2002	*G3		
		Q2003	*H3		

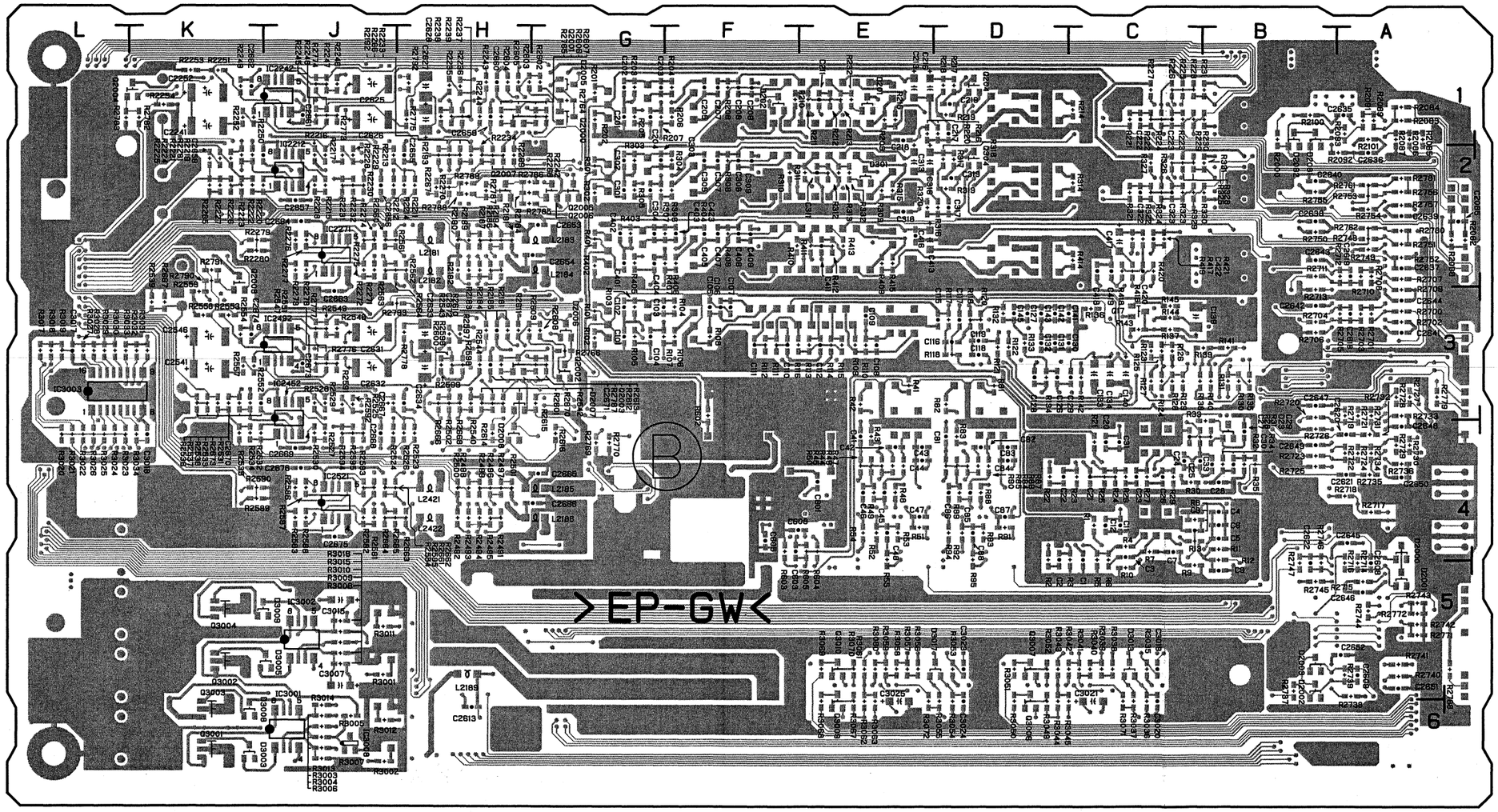

AA-90 -B SIDE-
SUFFIX: -12

CCU-TX7 (J) : S/N 30001-30035
CCU-TX7 (UC) : S/N 10001-10180
CCU-TX7 (CE) : S/N 40001-40135

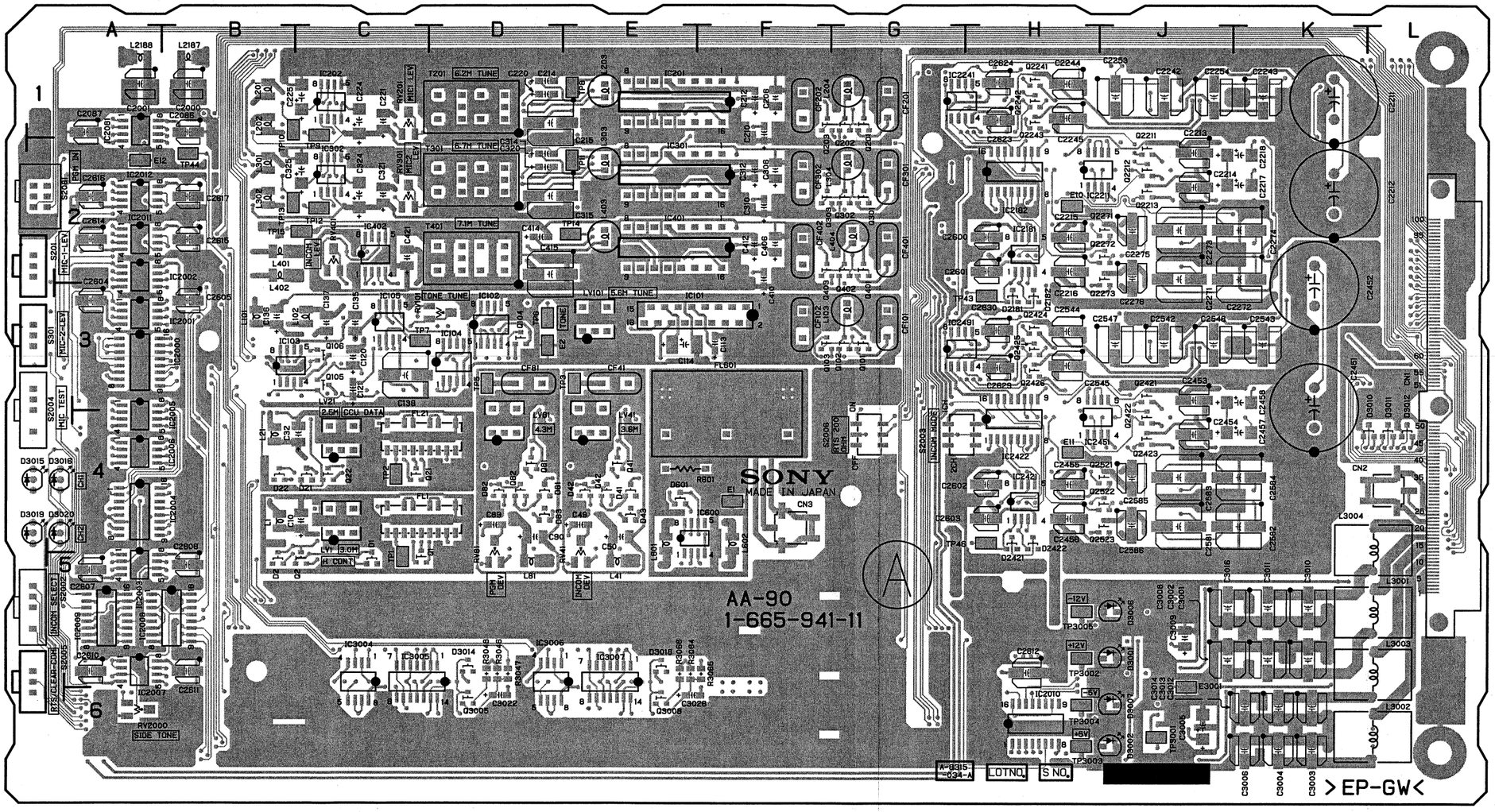

AA-90 -A SIDE-
SUFFIX: -11

*: B SIDE

CF41	E3	IC2012	A2	*Q2004	K1
CF81	D3	IC2081	A1	*Q2005	G2
CF101	G3	IC2181	H2	*Q2006	G2
CF102	F3	IC2182	H2	*Q2007	H2
CF201	G1	IC2211	H2	*Q2008	K2
CF202	F1	*IC2212	J2	Q2211	J2
CF301	G2	IC2241	G1	Q2212	J2
CF302	F2	*IC2242	J1	Q2213	J2
CF401	G2	*IC2271	J2	Q2241	H1
CF402	F2	IC2421	H4	Q2242	H1
		IC2422	H4	Q2243	H1
CN1	L3	IC2451	H4	Q2271	J2
CN2	L4	*IC2452	J3	Q2272	J2
CN3	F4	IC2491	G3	Q2273	J2
		*IC2521	J4	Q2421	J3
D1	C5	*IC3001	J6	Q2422	J4
D2	B5	*IC3002	J5	Q2423	J4
D21	C4	*IC3003	L3	Q2424	H3
D22	B4	IC3004	C5	Q2425	H3
*D23	B4	IC3005	C5	Q2426	H3
D41	E4	IC3006	D5	Q2521	J4
D42	E4	IC3007	E5	Q2522	J4
D43	E4	*IC3008	J6	Q2523	J4
D81	D4	LV1	C4	*Q3001	K6
D82	D4	LV21	C4	*Q3002	K5
D83	D4	LV41	E4	*Q3003	K6
D601	E4	LV81	D4	*Q3004	K5
*D2000	A4	LV101	E3	Q3005	D6
*D2001	A5			*Q3006	D6
*D2002	B5	L1	B4	*Q3007	D5
*D2003	B5	L21	B4	Q3008	E6
*D2005	G1	L41	E5	*Q3009	E6
*D2006	G3	L81	D5	*Q3010	E5
*D2007	H3	L101	B3		
*D2008	H4	L102	C3	RV41	E4
*D2081	B1	L103	G3	RV81	D4
*D2082	B1	L201	B1	RV101	D3
D2181	H3	L202	B1	RV201	C1
D2182	H3	L203	E1	RV301	C2
D2421	H4	L204	G1	RV401	C2
D2422	H4	L301	B2	RV2000	A6
D3001	J5	L302	B2		
D3002	J6	L303	E2	S201	A2
*D3003	K6	L304	G2	S301	A3
*D3005	J5	L401	B2	S2002	A5
D3006	J5	L402	B2	S2003	G4
D3007	J6	L403	E2	S2004	A3
*D3008	K6	L404	G2	S2005	A5
*D3009	J5	L601	E4	S2006	G4
D3010	L4	L602	F4	S2081	A2
D3011	L4	*L2181	H2		
D3012	L4	*L2182	H2	TP1	C5
*D3013	C5	*L2183	G2	TP2	C4
D3014	D5	*L2184	G2	TP3	E3
D3015	A4	*L2185	G4	TP5	D3
*D3017	D5	*L2186	G4	TP6	D3
D3018	E5	L2187	B1	TP7	C3
D3019	A4	L2188	A1	TP8	E1
		*L2189	H5	TP9	C1
E1	F4	*L2421	H4	TP10	B1
E2	D3	*L2422	H4	TP11	E2
E10	H2	L3001	L5	TP12	C2
E11	H4	L3002	L6	TP13	B2
E12	A2	L3003	L5	TP14	E2
E3001	J5	L3004	L4	TP15	C2
				TP43	H3
FL1	C4	Q1	C5	TP44	B2
FL21	C4	Q2	C5	TP46	H4
FL601	E4	*Q17	C3	TP3001	J6
		Q21	C4	TP3002	H5
IC101	F3	Q22	C4	TP3003	H6
IC102	D3	Q41	E4	TP3004	H6
IC103	B3	Q42	E4	TP3005	H5
IC104	D3	Q81	D4		
IC105	C3	Q82	D4	T201	D1
IC201	F1	Q101	G3	T301	D2
IC202	C1	Q102	G3	T401	D2
IC301	F2	Q103	F3		
IC302	C2	Q104	D3	W1	
IC401	F2	Q201	G1		
IC402	C2	Q202	G1		
IC600	E4	Q203	F1		
IC2000	A3	*Q204	D1		
IC2001	A3	Q301	G2		
IC2002	A2	Q302	G2		
IC2003	A5	Q303	F2		
IC2004	A4	*Q304	D2		
IC2005	A4	Q401	G2		
IC2006	A4	Q402	G2		
IC2007	A5	Q403	F2		
IC2008	B5	*Q2000	G1		
IC2009	A5	*Q2001	H1		
IC2010	H6	*Q2002	G3		
IC2011	A2	*Q2003	H3		

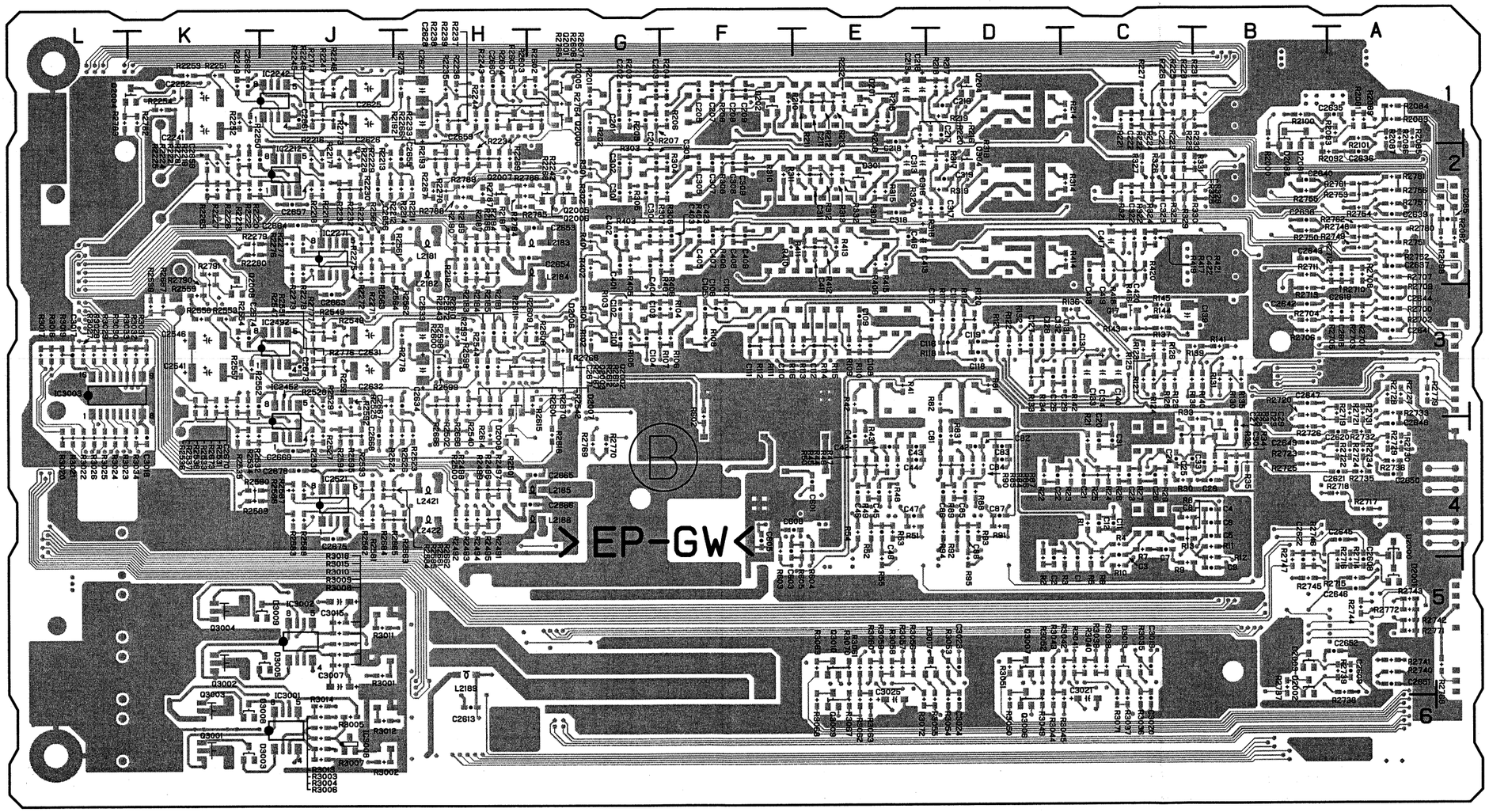

AA-90 -B SIDE-
SUFFIX: -11

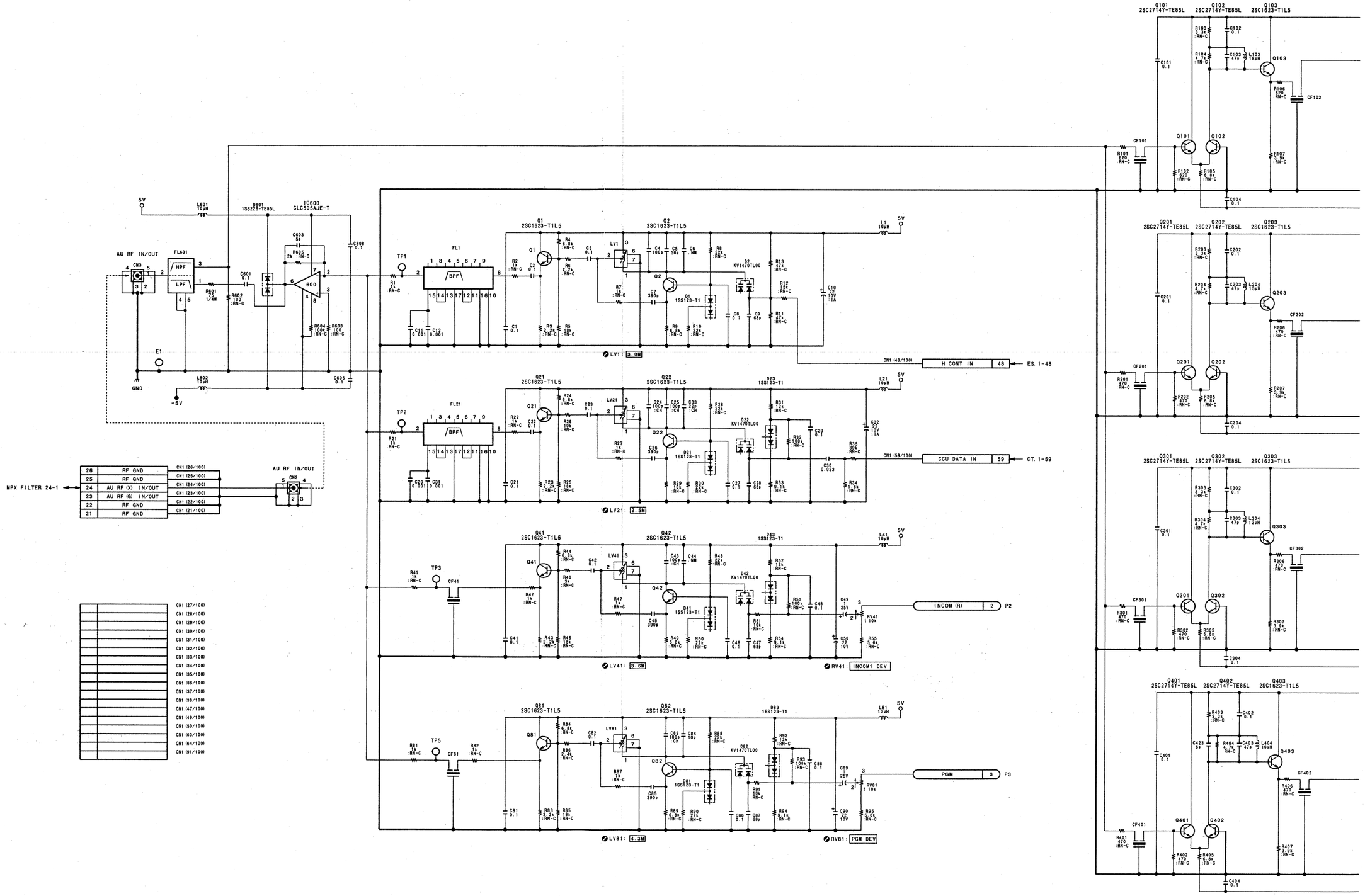
AU RF IN/OUT
FL601
HPF
LPF
CN3
E1
GND
L601 10μH
D601 1SS226-TE85L
IC600 CLC505AJE-T
600
5V
-5V
TP1
FL1
BPF
Q1 2SC1623-T1L5
Q2 2SC1623-T1L5
D1 1SS123-T1
D2 KV1470TL00
LV1 : 3.0M
L1 10μH
CN1 (48/100)
H CONT IN 48
ES. 1-48
TP2
FL21
Q21 2SC1623-T1L5
Q22 2SC1623-T1L5
D21 1SS123-T1
D22 KV1470TL00
D23 1SS123-T1
LV21 : 2.5M
L21 10μH
CN1 (59/100)
CCU DATA IN 59
CT. 1-59
TP3
CF41
Q41 2SC1623-T1L5
Q42 2SC1623-T1L5
D41 1SS123-T1
D42 KV1470TL00
D43 1SS123-T1
LV41 : 3.6M
L41 10μH
RV41 : INCOM1 DEV
INCOM (R) 2
P2
TP5
CF81
Q81 2SC1623-T1L5
Q82 2SC1623-T1L5
D81 1SS123-T1
D82 KV1470TL00
D83 1SS123-T1
LV81 : 4.3M
L81 10μH
RV81 : PGM DEV
PGM 3
P3
MPX FILTER 24-1
26 RF GND CN1 (26/100)
25 RF GND CN1 (25/100)
24 AU RF (X) IN/OUT CN1 (24/100)
23 AU RF (Y) IN/OUT CN1 (23/100)
22 RF GND CN1 (22/100)
21 RF GND CN1 (21/100)
AU RF IN/OUT
CN2
CN1 (27/100)
CN1 (28/100)
CN1 (29/100)
CN1 (30/100)
CN1 (31/100)
CN1 (32/100)
CN1 (33/100)
CN1 (34/100)
CN1 (35/100)
CN1 (36/100)
CN1 (37/100)
CN1 (38/100)
CN1 (47/100)
CN1 (48/100)
CN1 (58/100)
CN1 (63/100)
CN1 (64/100)
CN1 (91/100)
Q101 2SC2714Y-TE85L
Q102 2SC2714Y-TE85L
Q103 2SC1623-T1L5
CF101
CF102
Q201 2SC2714Y-TE85L
Q202 2SC2714Y-TE85L
Q203 2SC1623-T1L5
CF201
CF202
Q301 2SC2714Y-TE85L
Q302 2SC2714Y-TE85L
Q303 2SC1623-T1L5
CF301
CF302
Q401 2SC2714Y-TE85L
Q402 2SC2714Y-TE85L
Q403 2SC1623-T1L5
CF401
CF402

AA-90 (1/3)

AA-90 (1/3)

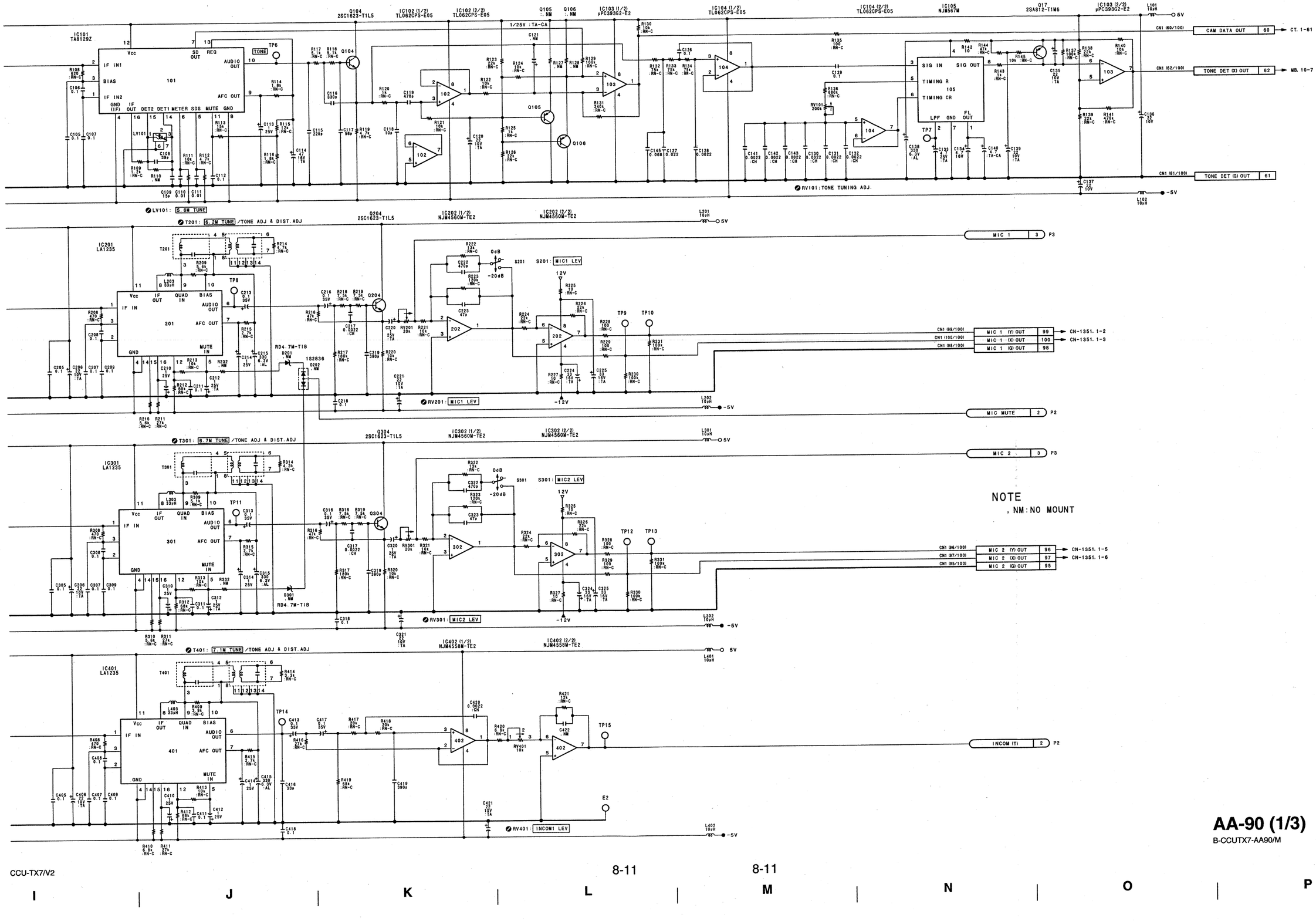

AA-90 (1/3)

B-CCUTX7-AA90/M

CCU-TX7/V2

8-11

8-11

1 2 3 4 5

I J K L M N O P

AA-90 (2/3)

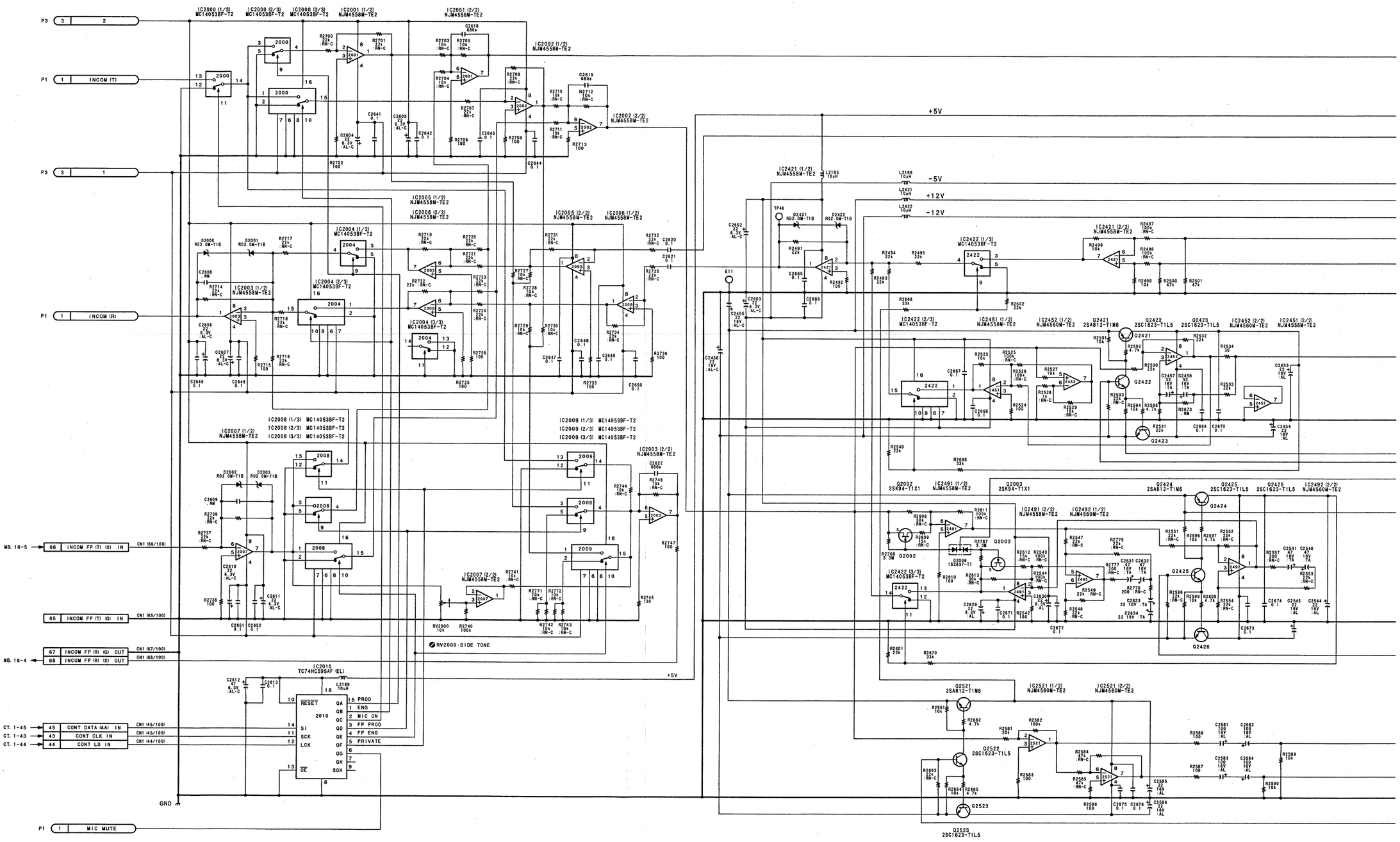
P3
P1
INCOM (T)
INCOM (R)
IC2000 (1/3) MC14053BF-T2
IC2000 (2/3) MC14053BF-T2
IC2000 (3/3) MC14053BF-T2
IC2001 (1/2) NJM4558M-TE2
IC2001 (2/2) NJM4558M-TE2
IC2002 (1/2) NJM4558M-TE2
IC2002 (2/2) NJM4558M-TE2
IC2003 (1/2) NJM4558M-TE2
IC2003 (2/2) NJM4558M-TE2
IC2004 (1/3) MC14053BF-T2
IC2004 (2/3) MC14053BF-T2
IC2004 (3/3) MC14053BF-T2
IC2005 (1/2) NJM4558M-TE2
IC2005 (2/2) NJM4558M-TE2
IC2006 (1/2) NJM4558M-TE2
IC2006 (2/2) NJM4558M-TE2
IC2007 (1/2) NJM4558M-TE2
IC2007 (2/2) NJM4558M-TE2
IC2008 (1/3) MC14053BF-T2
IC2008 (2/3) MC14053BF-T2
IC2008 (3/3) MC14053BF-T2
IC2009 (1/3) MC14053BF-T2
IC2009 (2/3) MC14053BF-T2
IC2009 (3/3) MC14053BF-T2
IC2010 TC74HC595AF (EL)
MB. 16-5
MB. 16-4
CT. 1-45
CT. 1-43
CT. 1-44
66 INCOM FP (T) (X) IN
65 INCOM FP (T) (G) IN
67 INCOM FP (R) (G) OUT
68 INCOM FP (R) (X) OUT
45 CONT DATA (AA) IN
43 CONT CLK IN
44 CONT LD IN
CN1 (66/100)
CN1 (65/100)
CN1 (67/100)
CN1 (68/100)
CN1 (45/100)
CN1 (43/100)
CN1 (44/100)
RESET
SI
SCK
LCK
OE
QA
QB
QC
QD
QE
QF
QG
QH
SQH
15 PROD
1 ENG
2 MIC ON
3 FP PROD
4 FP ENG
5 PRIVATE
RV2000:SIDE TONE
GND
+5V
-5V
+12V
-12V
P1 1 MIC MUTE
IC2421 (1/2) NJM4558M-TE2
IC2421 (2/2) NJM4558M-TE2
IC2422 (1/3) MC14053BF-T2
IC2422 (2/3) MC14053BF-T2
IC2422 (3/3) MC14053BF-T2
IC2451 (1/3) NJM4558M-TE2
IC2452 (1/2) NJM4560M-TE2
IC2452 (2/2) NJM4560M-TE2
IC2451 (2/2) NJM4558M-TE2
IC2491 (1/2) NJM4558M-TE2
IC2491 (2/2) NJM4558M-TE2
IC2492 (1/2) NJM4560M-TE2
IC2492 (2/2) NJM4560M-TE2
IC2521 (1/2) NJM4560M-TE2
IC2521 (2/2) NJM4560M-TE2
Q2002 2SK94-T1X1
Q2003 2SK94-T1X1
Q2421 2SA812-T1M6
Q2422 2SC1623-T1L5
Q2423 2SC1623-T1L5
Q2424 2SA812-T1M6
Q2425 2SC1623-T1L5
Q2426 2SC1623-T1L5
Q2521 2SA812-T1M6
Q2522 2SC1623-T1L5
Q2523 2SC1623-T1L5

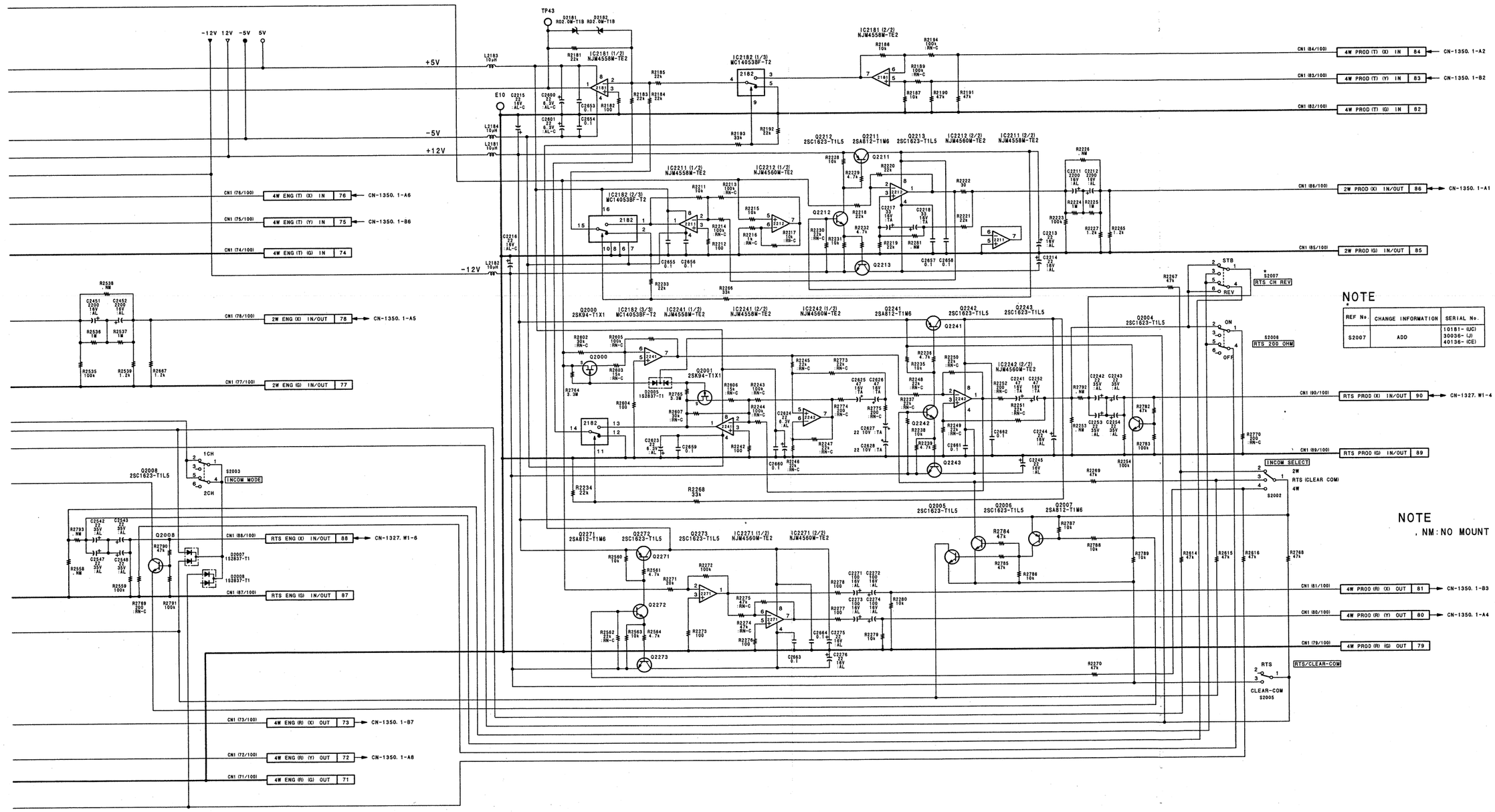
-12V 12V -5V 5V
+5V
-5V
+12V
-12V
TP43
E10
D2181 RD2.0W-T1B
D2182 RD2.0W-T1B
IC2181 (1/2) NJM4558M-TE2
IC2181 (2/2) NJM4558M-TE2
IC2182 (1/3) MC14053BF-T2
IC2182 (2/3) MC14053BF-T2
IC2182 (3/3) MC14053BF-T2
IC2211 (1/2) NJM4558M-TE2
IC2211 (2/2) NJM4558M-TE2
IC2212 (1/2) NJM4558M-TE2
IC2212 (2/2) NJM4560M-TE2
IC2241 (1/2) NJM4558M-TE2
IC2241 (2/2) NJM4558M-TE2
IC2242 (1/3) NJM4560M-TE2
IC2242 (2/2) NJM4560M-TE2
IC2271 (1/2) NJM4560M-TE2
IC2271 (2/2) NJM4560M-TE2
Q2000 2SK94-T1X1
Q2001 2SK94-T1X1
Q2004 2SC1623-T1L5
Q2005 2SC1623-T1L5
Q2006 2SC1623-T1L5
Q2007 2SA812-T1M6
Q2008 2SC1623-T1L5
Q2211 2SA812-T1M6
Q2212 2SC1623-T1L5
Q2213 2SC1623-T1L5
Q2241 2SA812-T1M6
Q2242 2SC1623-T1L5
Q2243 2SC1623-T1L5
Q2271 2SA812-T1M6
Q2272 2SC1623-T1L5
Q2273 2SC1623-T1L5
CN1 (84/100) 4W PROD (T) (X) IN 84 ← CN-1350. 1-A2
CN1 (83/100) 4W PROD (T) (Y) IN 83 ← CN-1350. 1-B2
CN1 (82/100) 4W PROD (T) (G) IN 82
CN1 (86/100) 2W PROD (X) IN/OUT 86 ← CN-1350. 1-A1
CN1 (85/100) 2W PROD (G) IN/OUT 85
CN1 (76/100) 4W ENG (T) (X) IN 76 ← CN-1350. 1-A6
CN1 (75/100) 4W ENG (T) (Y) IN 75 ← CN-1350. 1-B6
CN1 (74/100) 4W ENG (T) (G) IN 74
CN1 (78/100) 2W ENG (X) IN/OUT 78 ← CN-1350. 1-A5
CN1 (77/100) 2W ENG (G) IN/OUT 77
CN1 (90/100) RTS PROD (X) IN/OUT 90 ← CN-1327. W1-4
CN1 (89/100) RTS PROD (G) IN/OUT 89
CN1 (88/100) RTS ENG (X) IN/OUT 88 ← CN-1327. W1-6
CN1 (87/100) RTS ENG (G) IN/OUT 87
CN1 (81/100) 4W PROD (R) (X) OUT 81 ← CN-1350. 1-B3
CN1 (80/100) 4W PROD (R) (Y) OUT 80 ← CN-1350. 1-A4
CN1 (79/100) 4W PROD (R) (G) OUT 79
CN1 (73/100) 4W ENG (R) (X) OUT 73 ← CN-1350. 1-B7
CN1 (72/100) 4W ENG (R) (Y) OUT 72 ← CN-1350. 1-A8
CN1 (71/100) 4W ENG (R) (G) OUT 71
S2007 RTS CH REV
S2006 RTS 200 OHM
S2003 INCOM MODE
S2002 INCOM SELECT
S2005 RTS/CLEAR-COM
NOTE
REF No. | CHANGE INFORMATION | SERIAL No.
S2007 | ADD | 10181- (UC) 30036- (J) 40136- (CE)
NOTE
, NM:NO MOUNT

AA-90 (3/3)

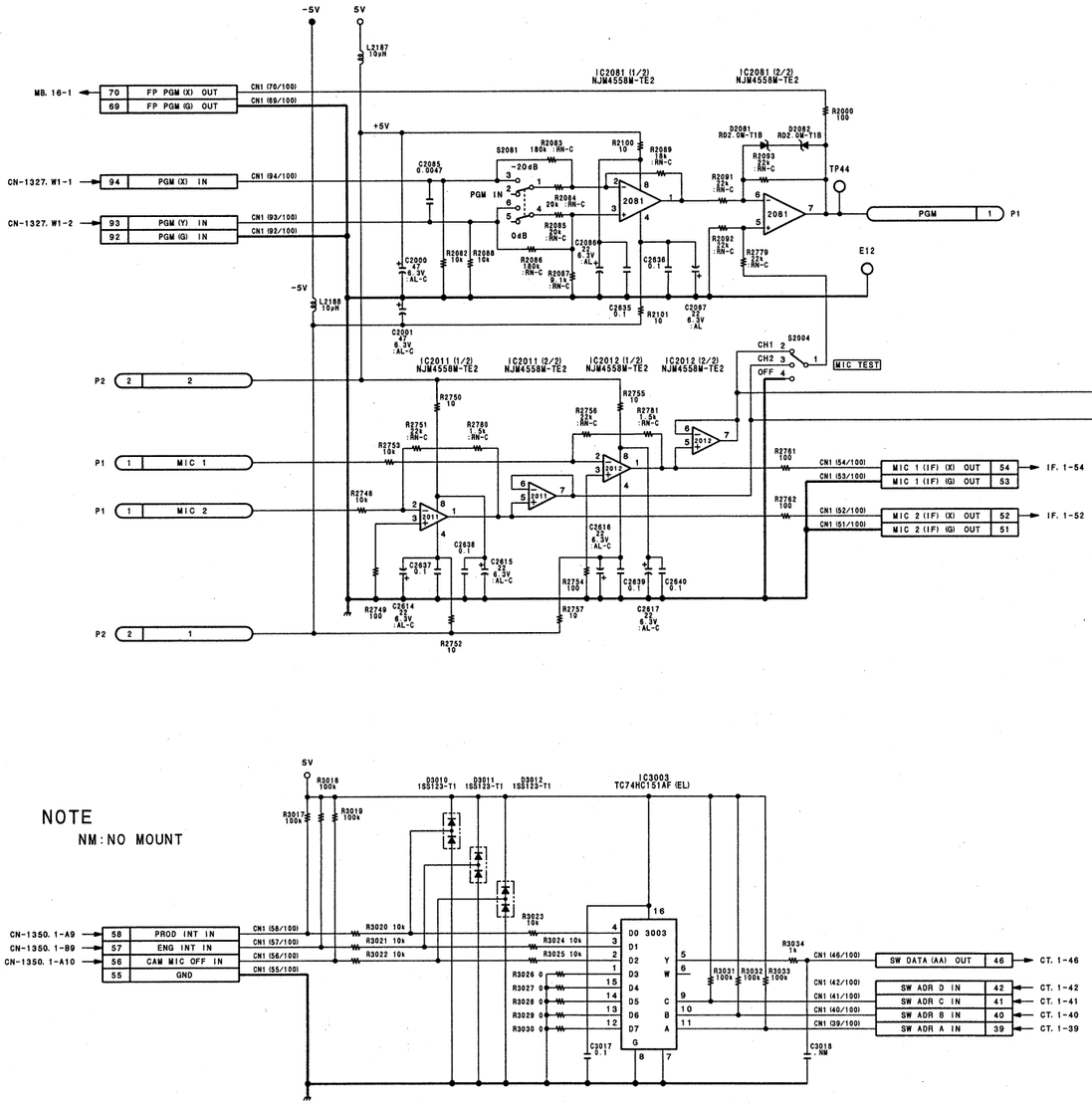
-5V
5V
L2187 10μH
IC2081 (1/2) NJM4558M-TE2
IC2081 (2/2) NJM4558M-TE2
MB. 16-1
70 FP PGM (X) OUT
69 FP PGM (G) OUT
CN1 (70/100)
CN1 (69/100)
CN-1327. W1-1
94 PGM (X) IN
CN1 (94/100)
CN-1327. W1-2
93 PGM (Y) IN
92 PGM (G) IN
CN1 (93/100)
CN1 (92/100)
+5V
S2081
-20dB
0dB
PGM IN
R2083 180k :RN-C
R2084 20k :RN-C
R2085 10k :RN-C
R2086 180k :RN-C
R2087 9.1k :RN-C
R2088 10k
R2089 18k :RN-C
R2091 10k :RN-C
R2093 82k :RN-C
R2100 10
R2000 100
D2081 RD2.0M-T1B
D2082 RD2.0M-T1B
TP44
PGM 1 P1
E12
C2085 0.0047
C2086 22 6.3V :AL-C
C2087 22 6.3V :AL
C2635 0.1
C2636 0.1
R2101 10
C2001 47 6.3V :AL-C
-5V
L2188 10μH
IC2011 (1/2) NJM4558M-TE2
IC2011 (2/2) NJM4558M-TE2
IC2012 (1/2) NJM4558M-TE2
IC2012 (2/2) NJM4558M-TE2
S2004
CH1
CH2
OFF
MIC TEST
P2 2 2
P1 1 MIC 1
P1 1 MIC 2
P2 2 1
R2750 10
R2751 22k :RN-C
R2753 10k
R2755 10
R2756 22k :RN-C
R2781 1.5k :RN-C
R2746 10k
R2749 100
R2752 10
R2754 100
R2757 10
R2761 100
R2762 100
C2614 22 6.3V :AL-C
C2615 22 6.3V :AL-C
C2616 22 6.3V :AL-C
C2617 22 6.3V :AL-C
C2637 0.1
C2638 0.1
C2639 0.1
C2640 0.1
CN1 (54/100)
CN1 (53/100)
MIC 1 (IF) (X) OUT 54
MIC 1 (IF) (G) OUT 53
IF. 1-54
CN1 (52/100)
CN1 (51/100)
MIC 2 (IF) (X) OUT 52
MIC 2 (IF) (G) OUT 51
IF. 1-52
NOTE
NM:NO MOUNT
5V
R3018 100k
R3017 100k
R3019 100k
D3010 1SS123-T1
D3011 1SS123-T1
D3012 1SS123-T1
IC3003 TC74HC151AF (EL)
CN-1350. 1-A9
CN-1350. 1-B9
CN-1350. 1-A10
58 PROD INT IN
57 ENG INT IN
56 CAM MIC OFF IN
55 GND
CN1 (58/100)
CN1 (57/100)
CN1 (56/100)
CN1 (55/100)
R3020 10k
R3021 10k
R3022 10k
R3023 10k
R3024 10k
R3025 10k
R3026 0
R3027 0
R3028 0
R3029 0
R3030 0
D0 3003
D1
D2
D3
D4
D5
D6
D7
G
Y
W
C
B
A
C3017 0.1
C3018 NM
R3034 1k
R3031 100k
R3032 100k
R3033 100k
CN1 (46/100)
CN1 (42/100)
CN1 (41/100)
CN1 (40/100)
CN1 (39/100)
SW DATA (AA) OUT 46
SW ADR D IN 42
SW ADR C IN 41
SW ADR B IN 40
SW ADR A IN 39
CT. 1-46
CT. 1-42
CT. 1-41
CT. 1-40
CT. 1-39

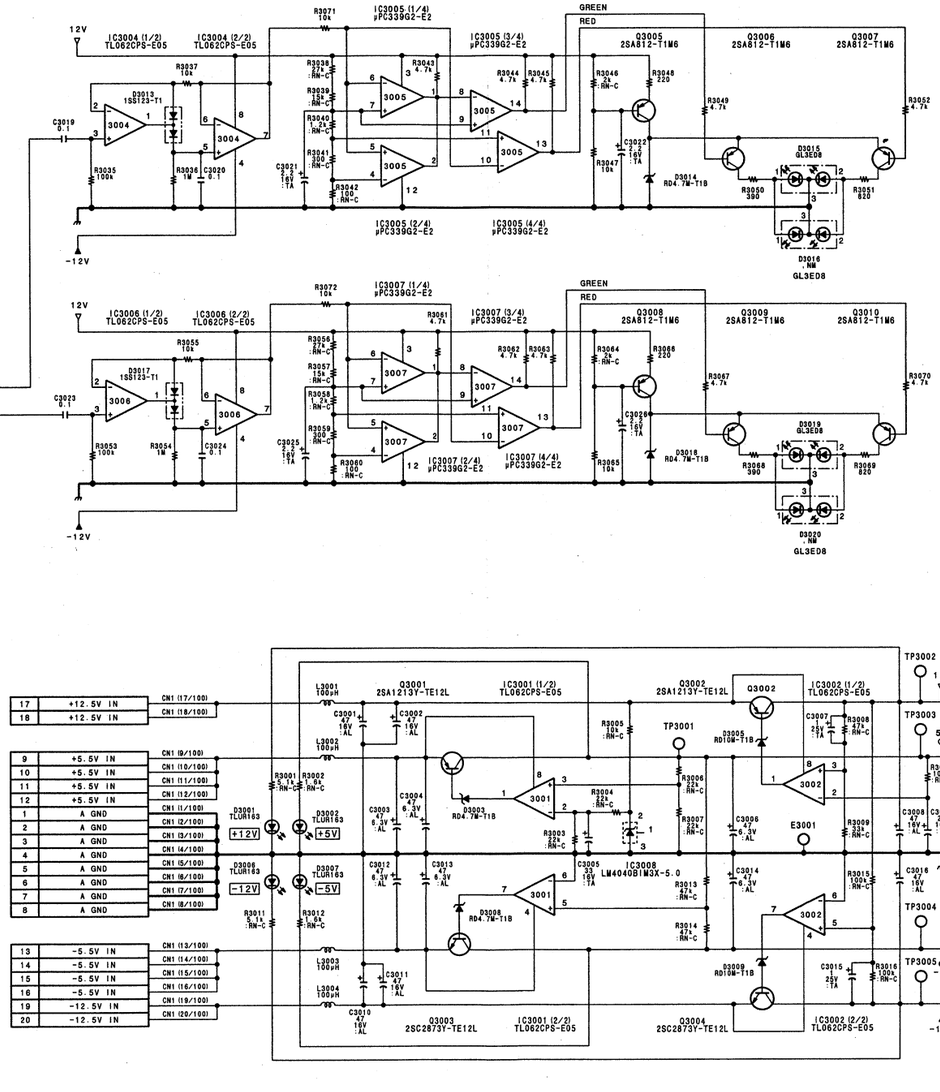
12V
IC3004 (1/2) TL062CPS-E05
IC3004 (2/2) TL062CPS-E05
IC3005 (1/4) μPC339G2-E2
IC3005 (3/4) μPC339G2-E2
IC3005 (2/4) μPC339G2-E2
IC3005 (4/4) μPC339G2-E2
GREEN
RED
Q3005 2SA812-T1M6
Q3006 2SA812-T1M6
Q3007 2SA812-T1M6
R3071 10k
R3037 10k
C3019 0.1
D3013 1SS123-T1
R3035 100k
R3036 1M
C3020 0.1
R3038 82k :RN-C
R3039 15k :RN-C
R3040 1.24k :RN-C
R3041 300 :RN-C
R3042 100 :RN-C
R3043 4.7k
R3044 4.7k
R3045 4.7k
C3021 2.2 16V :TA
R3046 2k :RN-C
R3047 10k
C3022 2.2 16V :TA
R3048 220
R3049 4.7k
R3050 390
R3051 820
R3052 4.7k
D3015 GL3ED8
D3014 RD4.7M-T1B
D3016 NM
GL3ED8
-12V
IC3006 (1/2) TL062CPS-E05
IC3006 (2/2) TL062CPS-E05
IC3007 (1/4) μPC339G2-E2
IC3007 (3/4) μPC339G2-E2
IC3007 (2/4) μPC339G2-E2
IC3007 (4/4) μPC339G2-E2
Q3008 2SA812-T1M6
Q3009 2SA812-T1M6
Q3010 2SA812-T1M6
R3072 10k
R3055 10k
C3023 0.1
D3017 1SS123-T1
R3053 100k
R3054 1M
C3024 0.1
R3056 27k :RN-C
R3057 15k :RN-C
R3058 1.24k :RN-C
R3059 300 :RN-C
R3060 100 :RN-C
R3061 4.7k
R3062 4.7k
R3063 4.7k
C3025 2.2 16V :TA
R3064 2k :RN-C
R3065 10k
C3026 2.2 16V :TA
R3066 220
R3067 4.7k
R3068 390
R3069 820
R3070 4.7k
D3019 GL3ED8
D3018 RD4.7M-T1B
D3020 NM
GL3ED8
-12V

17 +12.5V IN
18 +12.5V IN
CN1 (17/100)
CN1 (18/100)
9 +5.5V IN
10 +5.5V IN
11 +5.5V IN
12 +5.5V IN
1 A GND
2 A GND
3 A GND
4 A GND
5 A GND
6 A GND
7 A GND
8 A GND
CN1 (9/100)
CN1 (10/100)
CN1 (11/100)
CN1 (12/100)
CN1 (1/100)
CN1 (2/100)
CN1 (3/100)
CN1 (4/100)
CN1 (5/100)
CN1 (6/100)
CN1 (7/100)
CN1 (8/100)
13 -5.5V IN
14 -5.5V IN
15 -5.5V IN
16 -5.5V IN
19 -12.5V IN
20 -12.5V IN
CN1 (13/100)
CN1 (14/100)
CN1 (15/100)
CN1 (16/100)
CN1 (19/100)
CN1 (20/100)
L3001 100μH
L3002 100μH
L3003 100μH
L3004 100μH
Q3001 2SA1213Y-TE12L
Q3002 2SA1213Y-TE12L
Q3002
Q3003 2SC2873Y-TE12L
Q3004 2SC2873Y-TE12L
IC3001 (1/2) TL062CPS-E05
IC3001 (2/2) TL062CPS-E05
IC3002 (1/2) TL062CPS-E05
IC3002 (2/2) TL062CPS-E05
IC3008 LM4040BIM3X-5.0
TP3001
TP3002
TP3003
TP3004
TP3005
E3001
12V
+12V
5V
+5V
-5V
-12V
D3001 TLOR163
D3002 TLOR163
D3006 TLOR163
D3007 TLOR163
D3003 RD4.7M-T1B
D3004 RD5.6M-T1B
D3005 RD10M-T1B
D3008 RD4.7M-T1B
D3009 RD10M-T1B
R3001 5.1k :RN-C
R3002 6k :RN-C
R3004 82k :RN-C
R3005 10k :RN-C
R3006 82k :RN-C
R3007 33k :RN-C
R3008 10k :RN-C
R3009 33k :RN-C
R3010 100k :RN-C
R3011 5.1k :RN-C
R3012 6k :RN-C
R3013 47k :RN-C
R3014 27k :RN-C
R3015 100k :RN-C
R3016 100k :RN-C
C3001 47 16V :AL
C3002 47 16V :AL
C3003 47 6.3V :AL
C3004 47 6.3V :AL
C3005 33 16V :TA
C3006 47 6.3V :AL
C3007 47 25V :TA
C3008 47 16V :AL
C3009 22 16V :TA
C3010 47 16V :AL
C3011 47 16V :AL
C3012 47 6.3V :AL
C3013 47 6.3V :AL
C3014 22 6.3V :AL
C3015 33 25V :TA
C3016 22 16V :AL
C3017 47 16V :AL
C3018 47 16V :AL
C3019 47 16V :AL

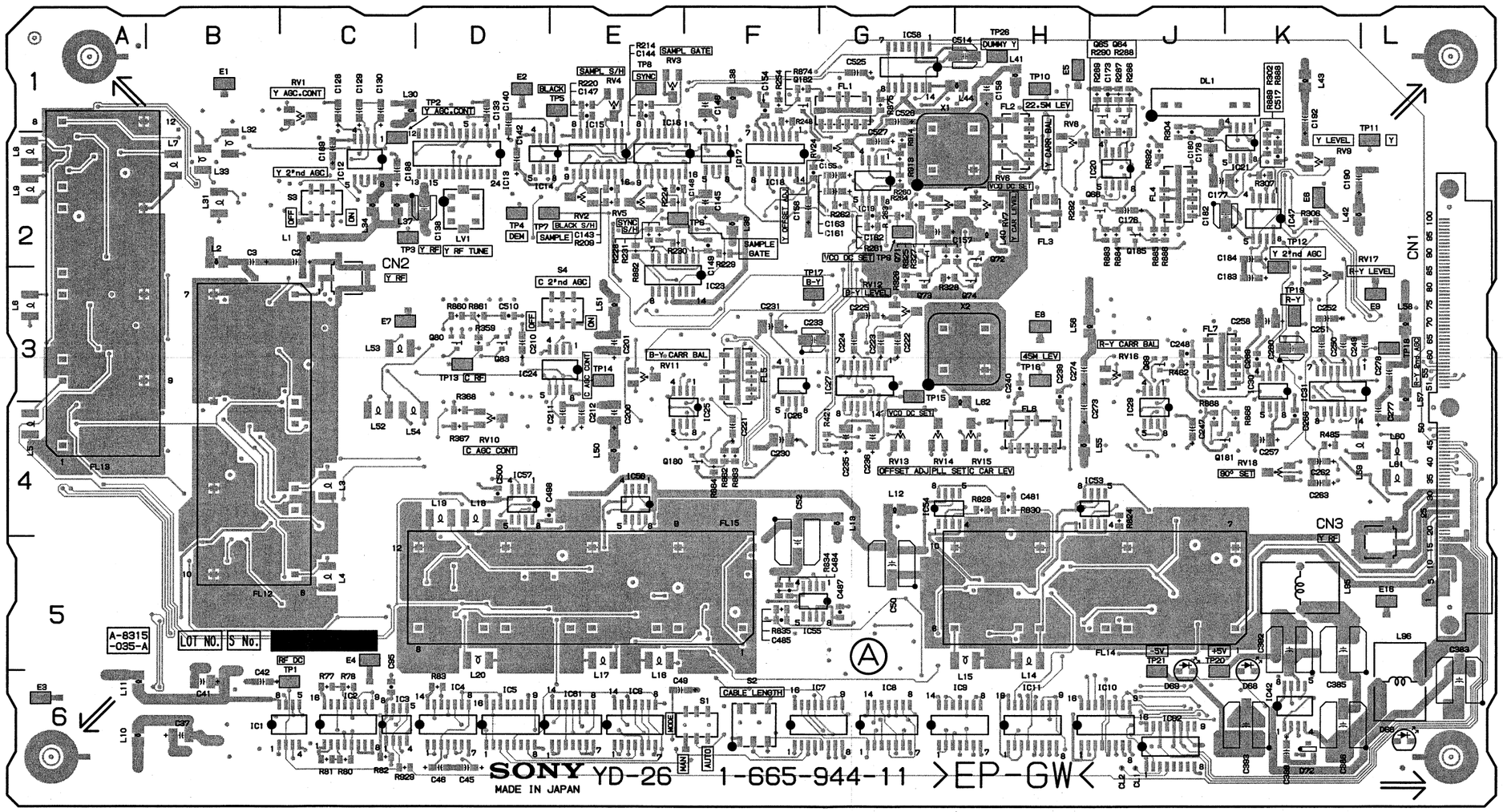

YD-26 -A SIDE-
SUFFIX: -11

*: B SIDE

CN1	L4	IC20	J2
CN2	C3	IC21	K2
CN3	L5	IC23	E3
		IC24	E3
DL1	J1	IC25	F4
		IC26	F3
*D1	C3	IC27	G3
*D2	C4	IC29	J4
*D3	C4	IC30	K3
*D4	C5	IC31	K3
*D5	C5	IC42	K6
*D6	A3	IC47	K2
*D7	A4	*IC52	J6
*D8	A3	IC53	J4
*D9	A3	IC54	G4
*D10	A2	IC55	F5
*D11	A2	IC56	E4
*D12	A2	IC57	D4
*D13	B6	IC58	G1
*D14	B6	IC61	E6
*D15	B6	IC62	J6
*D16	D6	LV1	D2
*D17	E6	L1	C2
*D18	J5	L2	B2
*D19	H5	L3	C4
*D20	H5	L4	C5
*D21	H5	L5	A4
*D22	G5	L6	A3
*D23	F5	L7	B2
*D24	F5	L8	A2
*D25	E5	L9	A2
*D26	E5	L10	A6
*D27	D5	L11	A6
*D28	D5	L12	G4
*D29	D5	L13	G4
*D30	D5	L14	H5
*D40	B2	L15	H5
*D41	B1	L16	E5
*D42	G1	L17	E5
*D43	J2	L18	D4
*D50	C3	L19	D4
*D51	C3	L20	D5
*D52	F4	L30	C1
*D53	J4	L31	B2
*D54	L4	L32	B2
D66	L6	L33	B2
D68	K5	L34	C2
D69	J5	L37	C2
*D70	K6	L38	F1
*D71	K6	L39	F2
D72	K6	L40	H2
		L41	H1
E1	B1	L42	K2
E2	D1	L43	K1
E3	A6	L44	H1
E4	C5	L50	E4
E5	H1	L51	E3
E6	K2	L52	C4
E7	C3	L53	C3
E8	H3	L54	D4
E9	L3	L55	H4
E16	L5	L56	J3
		L57	L3
FL1	G1	L58	L3
FL2	H2	L59	K4
FL3	H2	L60	L4
FL4	J2	L61	L4
FL5	F3	L62	H3
FL6	H4	L95	K5
FL7	J3	L96	L6
FL12	C3		
FL13	A4	*Q1	C3
FL14	K5	*Q2	C3
FL15	F5	*Q3	B3
		*Q4	B3
IC1	C6	*Q5	B4
IC2	C6	*Q6	B4
IC3	C6	*Q7	C4
IC4	D6	*Q8	B4
IC5	D6	*Q9	B4
IC6	E6	*Q10	B5
IC7	G6	*Q11	A4
IC8	G6	*Q12	B4
IC9	H6	*Q13	B3
IC10	J6	*Q14	A3
IC11	H6	*Q15	A2
IC12	C2	*Q16	A2
IC13	D2	*Q17	B6
IC14	D2	*Q18	B6
IC15	E2	*Q19	J5
IC16	E2	*Q20	J5
IC17	F2	*Q21	J5
IC18	F2	*Q22	J5
IC19	G2	*Q23	J5

*Q24	H5	RV12	G3
*Q25	H5	RV13	G4
*Q26	H5	RV14	G4
*Q27	H5	RV15	H4
*Q28	G5	RV16	J3
*Q29	G5	RV17	K3
*Q30	G5	RV18	K4
*Q31	G5	RV24	G2
*Q32	F5		
*Q33	F5	S1	F6
*Q34	F5	S2	F6
*Q35	F5	S3	C2
*Q36	E5	S4	E3
*Q37	D5		
*Q38	D5	TP1	C6
*Q39	D5	TP2	C2
*Q50	B1	TP3	C2
*Q51	B2	TP4	D2
*Q52	C2	TP5	E1
*Q53	C2	TP6	E2
*Q54	C1	TP7	E2
*Q55	E1	TP8	E1
*Q56	E2	TP9	G2
*Q57	E1	TP10	H1
*Q58	G2	TP11	L2
*Q60	G2	TP12	K2
*Q61	G2	TP13	D3
*Q62	H2	TP14	E3
*Q63	H1	TP15	G3
*Q64	J1	TP16	H3
*Q65	J1	TP17	F3
Q66	J2	TP18	L3
Q67	J2	TP19	K3
Q68	K2	TP20	J5
*Q69	K2	TP21	J5
Q71	G2	TP26	H1
Q72	H2		
Q73	G3	W1	
Q74	H3		
Q80	D3	X1	G2
*Q81	D3	X2	G3
*Q82	D3		
Q83	D3		
*Q84	D3		
*Q85	D3		
*Q86	D3		
*Q87	D3		
*Q88	F3		
*Q89	F3		
*Q90	F4		
*Q91	G3		
*Q92	F4		
*Q93	G4		
*Q94	H4		
*Q95	H3		
*Q96	H3		
*Q97	J3		
*Q98	J3		
Q99	J3		
*Q100	J3		
*Q101	J4		
*Q102	L3		
*Q103	K4		
*Q104	K4		
*Q105	L4		
*Q106	L4		
*Q145	K5		
*Q146	K6		
*Q170	B3		
*Q171	B3		
*Q172	C5		
*Q173	C4		
*Q174	B5		
*Q175	B5		
*Q176	B3		
*Q177	B3		
*Q178	A2		
*Q179	A1		
Q180	F4		
Q181	K4		
Q182	F1		
*Q183	G1		
*Q184	G1		
Q185	J2		

RV1	C1
RV2	E2
RV3	E1
RV4	E1
RV5	E2
RV6	G2
RV7	H2
RV8	H2
RV9	K2
RV10	D4
RV11	E3

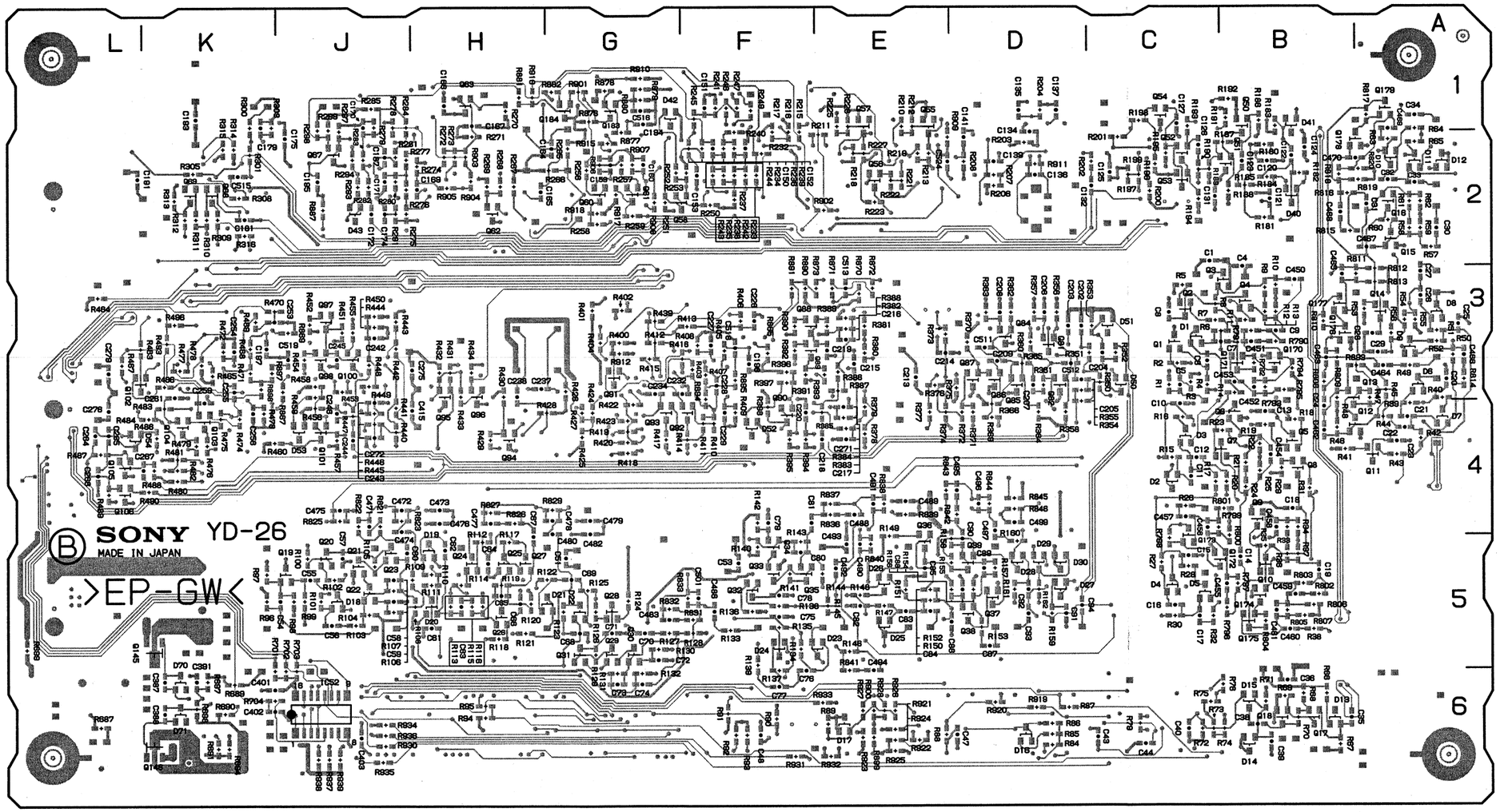

YD-26 -B SIDE-
SUFFIX: -11

YD-26 (1/3)

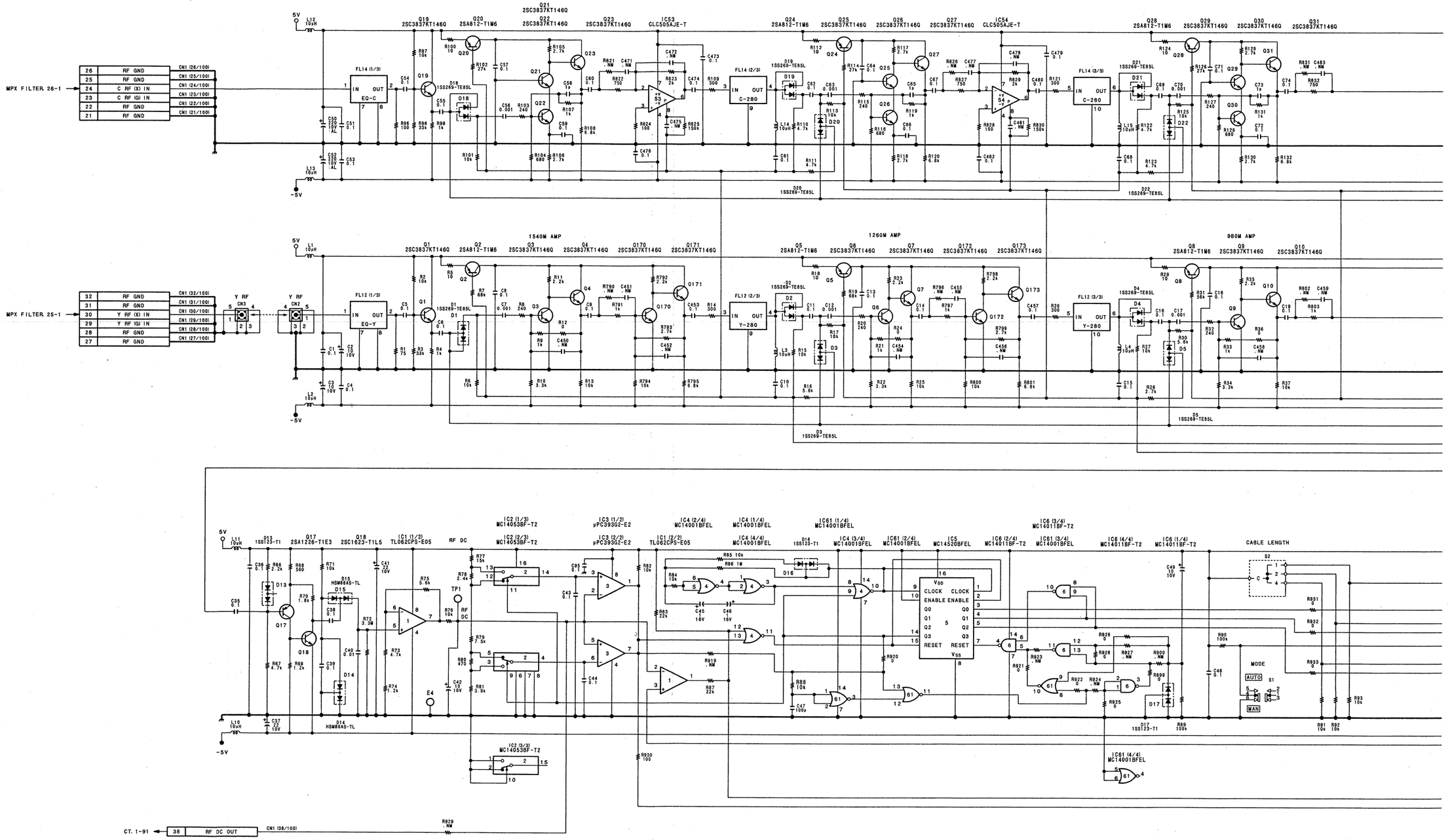
MPX FILTER 26-1
26 RF GND
25 RF GND
24 C RF (X) IN
23 C RF (G) IN
22 RF GND
21 RF GND
CN1 (26/100)
CN1 (25/100)
CN1 (24/100)
CN1 (23/100)
CN1 (22/100)
CN1 (21/100)
MPX FILTER 25-1
32 RF GND
31 RF GND
30 Y RF (X) IN
29 Y RF (G) IN
28 RF GND
27 RF GND
CN1 (32/100)
CN1 (31/100)
CN1 (30/100)
CN1 (29/100)
CN1 (28/100)
CN1 (27/100)
Y RF
CN3
CN2
5V
-5V
FL14 (1/3) EQ-C
FL14 (2/3) C-280
FL14 (3/3) C-280
FL12 (1/3) EQ-Y
FL12 (2/3) Y-280
FL12 (3/3) Y-280
1540M AMP
1260M AMP
980M AMP
IC53 CLC505AJE-T
IC54 CLC505AJE-T
Q19 2SC3837KT146Q
Q20 2SA812-T1M6
Q21 2SC3837KT146Q
Q22 2SC3837KT146Q
Q23 2SC3837KT146Q
Q24 2SA812-T1M6
Q25 2SC3837KT146Q
Q26 2SC3837KT146Q
Q27 2SC3837KT146Q
Q28 2SA812-T1M6
Q29 2SC3837KT146Q
Q30 2SC3837KT146Q
Q31 2SC3837KT146Q
Q1 2SC3837KT146Q
Q2 2SA812-T1M6
Q3 2SC3837KT146Q
Q4 2SC3837KT146Q
Q170 2SC3837KT146Q
Q171 2SC3837KT146Q
Q5 2SA812-T1M6
Q6 2SC3837KT146Q
Q7 2SC3837KT146Q
Q172 2SC3837KT146Q
Q173 2SC3837KT146Q
Q8 2SA812-T1M6
Q9 2SC3837KT146Q
Q10 2SC3837KT146Q
D18 1SS269-TE85L
D19 1SS269-TE85L
D20 1SS269-TE85L
D21 1SS269-TE85L
D22 1SS269-TE85L
D1 1SS269-TE85L
D2 1SS269-TE85L
D3 1SS269-TE85L
D4 1SS269-TE85L
D5 1SS269-TE85L

5V
-5V
RF DC
TP1
E4
IC2 (1/3) MC14053BF-T2
IC2 (2/3) MC14053BF-T2
IC2 (3/3) MC14053BF-T2
IC3 (1/2) μPC393G2-E2
IC3 (2/2) μPC393G2-E2
IC4 (2/4) MC14001BFEL
IC4 (1/4) MC14001BFEL
IC4 (4/4) MC14001BFEL
IC4 (3/4) MC14001BFEL
IC61 (1/4) MC14001BFEL
IC61 (2/4) MC14001BFEL
IC61 (3/4) MC14001BFEL
IC61 (4/4) MC14001BFEL
IC6 (3/4) MC14011BF-T2
IC6 (2/4) MC14011BF-T2
IC6 (4/4) MC14011BF-T2
IC6 (1/4) MC14011BF-T2
IC1 (1/2) TL062CPS-E05
IC1 (2/2) TL062CPS-E05
IC5 MC14520BFEL
Q17 2SA1226-T1E3
Q18 2SC1623-T1L5
D13 1SS123-T1
D16 1SS123-T1
D17 1SS123-T1
D14 HSM88AS-TL
D15 HSM88AS-TL
CABLE LENGTH
MODE
AUTO
MAN
S1
S2
CT. 1-91
38 RF DC OUT
CN1 (38/100)

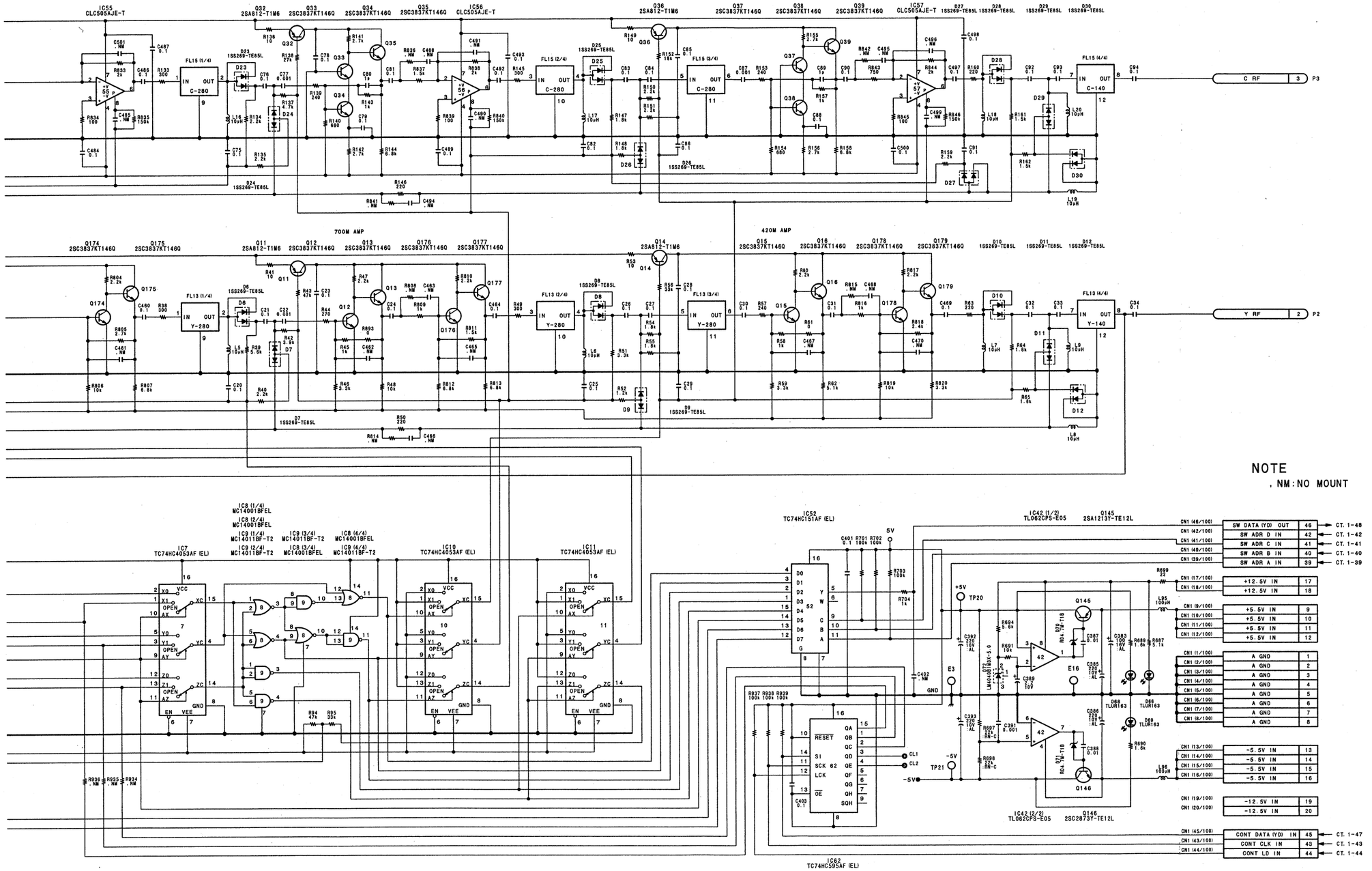

YD-26 (1/3)

B-CCUTX7-YD26/M

CCU-TX7/V2

8-19 8-19

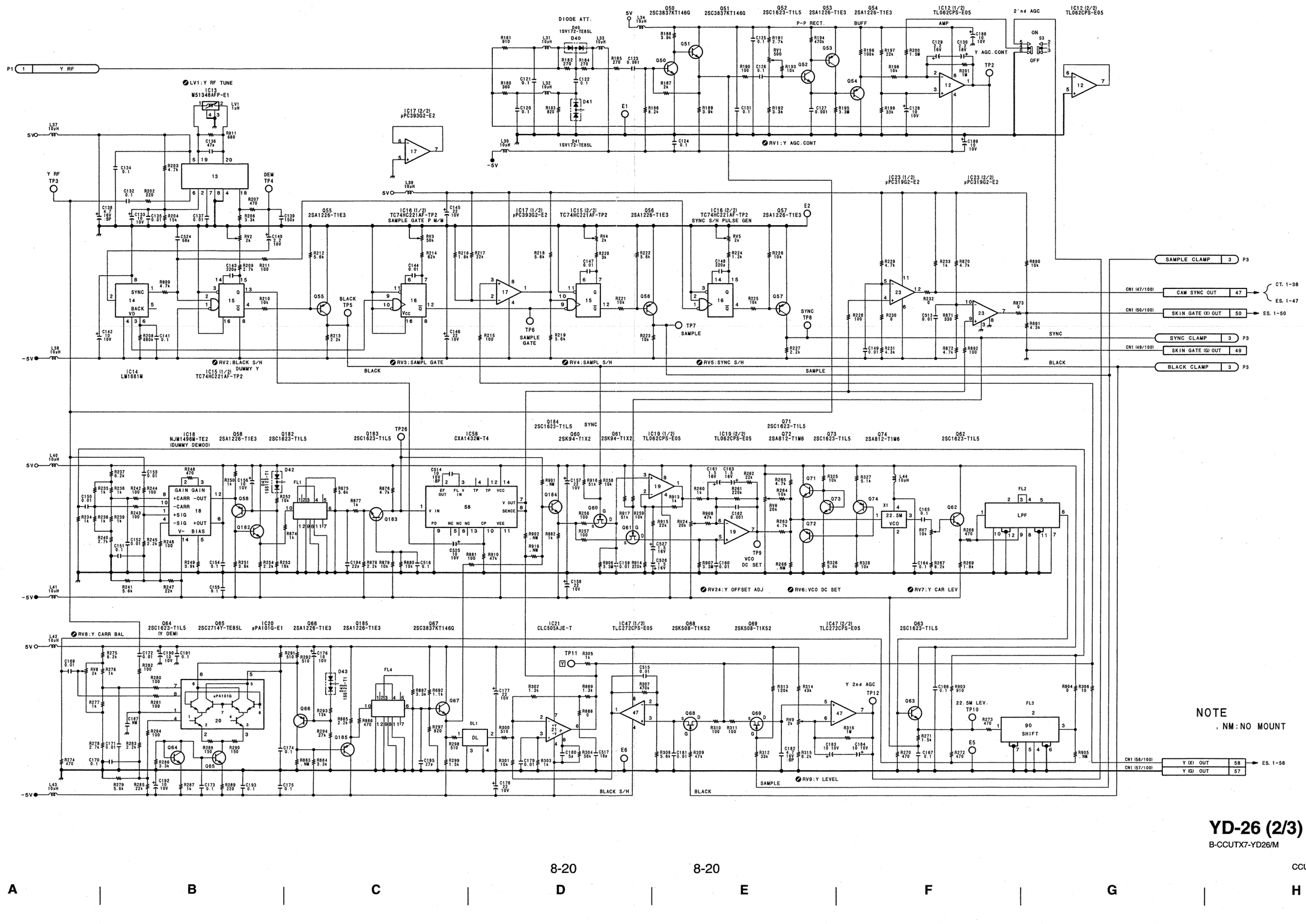
P1 Y RF
LV1:Y RF TUNE
IC13 M51348AFP-E1
Y RF TP3
DEM TP4
IC14 LM1881M
IC15(1/2) TC74HC221AF-TP2 DUMMY Y
IC16(1/2) TC74HC221AF-TP2 SAMPLE GATE P M/M
IC17(1/2) μPC393G2-E2
IC15(2/2) TC74HC221AF-TP2
IC16(2/2) TC74HC221AF-TP2 SYNC S/H PULSE GEN
IC17(2/2) μPC393G2-E2
IC23(1/2) μPC319G2-E2
IC23(2/2) μPC319G2-E2
DIODE ATT.
P-P RECT.
BUFF
AMP
2nd AGC
Y AGC CONT
RV1:Y AGC CONT
RV2:BLACK S/H
RV3:SAMPL GATE
RV4:SAMPL S/H
RV5:SYNC S/H
BLACK TP5
TP6 SAMPLE GATE
TP7 SAMPLE
SYNC TP8
SAMPLE CLAMP 3 P3
CAM SYNC OUT 47 CT. 1-38 ES. 1-47
SKIN GATE (R) OUT 50 ES. 1-50
SYNC CLAMP 3 P3
SKIN GATE (G) OUT 49
BLACK CLAMP 3 P3
IC18 NJM1496M-TE2 (DUMMY DEMOD)
IC58 CXA1432M-T4
IC19(1/2) TL062CPS-E05
IC19(2/2) TL062CPS-E05
IC20 μPA101G-E1
IC21 CLC505AJE-T
IC47(1/2) TLC272CPS-E05
IC47(2/2) TLC272CPS-E05
RV8:Y CARR BAL
RV24:Y OFFSET ADJ
RV6:VCO DC SET
RV7:Y CAR LEV
RV9:Y LEVEL
TP9 VCO DC SET
TP10 22.5M LEV.
TP11
TP12 Y 2nd AGC
22.5M VCO
LPF
90 SHIFT
Y (X) OUT 58 ES. 1-58
Y (G) OUT 57
NOTE
, NM:NO MOUNT

YD-26 (3/3)

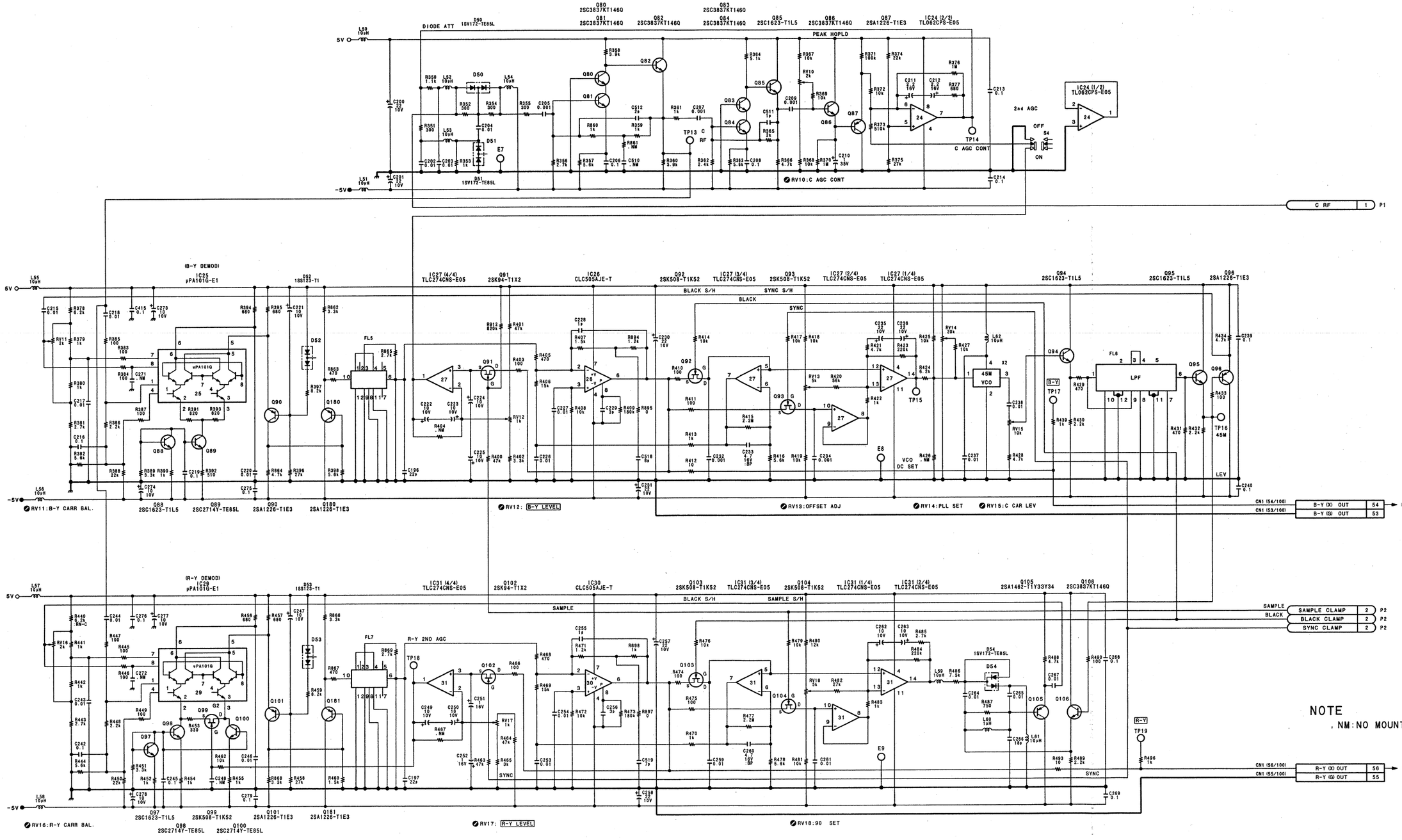
DIODE ATT
PEAK HOPLD
2nd AGC
OFF
ON
C AGC CONT
RV10:C AGC CONT
C RF
(B-Y DEMOD)
(R-Y DEMOD)
BLACK S/H
SYNC S/H
SAMPLE
BLACK
SYNC
R-Y 2ND AGC
VCO DC SET
RV11:B-Y CARR BAL.
RV12: B-Y LEVEL
RV13:OFFSET ADJ
RV14:PLL SET
RV15:C CAR LEV
RV16:R-Y CARR BAL.
RV17: R-Y LEVEL
RV18:90 SET
B-Y (X) OUT
B-Y (G) OUT
R-Y (X) OUT
R-Y (G) OUT
SAMPLE CLAMP
BLACK CLAMP
SYNC CLAMP
NOTE
, NM:NO MOUNT

CCU-TX7 (J) : S/N 30036 and higher
CCU-TX7 (UC) : S/N 10241 and higher
CCU-TX7 (CE) : S/N 40186 and higher

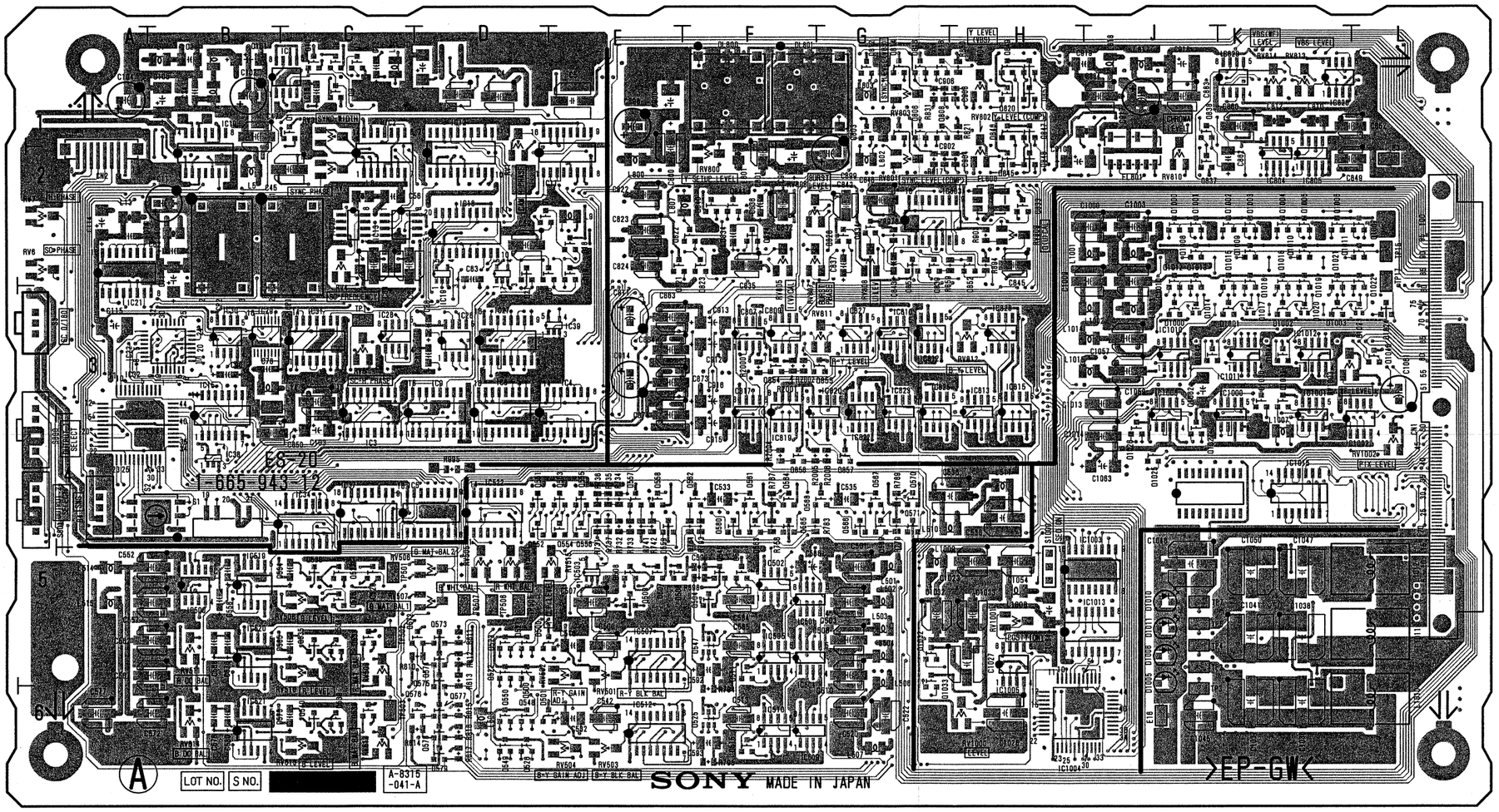

ES-20 -A SIDE-
SUFFIX: -12

*: B SIDE

CN1	L3	IC814	*H3	Q5	*D1		
CN2	A2	IC815	H3	Q6	*C1		
		IC816	*F3	Q7	C1		
CP1	B2	IC817	F3	Q8	C1		
CP2	B2	IC818	*F3	Q9	C1		
		IC819	F3	Q10	C1		
D1	*D1	IC820	G3	Q11	*C1		
D2	*D1	IC821	*G3	Q12	*D1		
D3	*E4	IC822	G3	Q13	*C2		
D4	*C2	IC823	G3	Q14	C1		
D6	*B1	IC824	*G3	Q15	*B1		
D10	*D2	IC825	G3	Q16	*B1		
D11	*C2	IC826	K1	Q17	D2		
D12	*C3	IC827	G3	Q18	E2		
D500	D5	IC828	H3	Q19	E2		
D501	D6	IC829	K1	Q20	D2		
D1000	J3	IC1000	K4	Q21	D2		
D1001	K3	IC1001	K4	Q22	*B2		
D1002	K3	IC1002	L4	Q23	*D4		
D1003	K3	IC1003	J5	Q500	D5		
D1004	*H5	IC1004	H6	Q501	*F5		
D1005	J5	IC1005	H5	Q502	F5		
D1006	J5	IC1006	*K5	Q503	*F5		
D1007	*K5	IC1007	*K6	Q504	F5		
D1009	*K6	IC1009	*L4	Q505	*F5		
D1010	J5	IC1010	J3	Q506	E5		
D1011	J5	IC1011	K3	Q507	E5		
D1012	*K5	IC1012	K3	Q508	E5		
		IC1013	J5	Q509	E5		
DL800	F1	IC1014	*K5	Q510	*F5		
DL801	F1	IC1015	K4	Q511	F5		
				Q512	*E5		
E1	B3	L1	B1	Q513	*E5		
E3	L2	L2	B1	Q514	*F6		
E16	J6	L3	C1	Q515	F6		
		L4	B1	Q519	*E6		
FL800	H2	L5	B2	Q520	*E6		
FL801	J2	L6	*C1	Q521	D5		
		L7	*B1	Q522	D5		
IC1	C1	L8	C2	Q523	D5		
IC2	C2	L9	E2	Q524	*F6		
IC3	C3	L10	B2	Q525	F6		
IC4	E3	L11	*C2	Q526	D6		
IC5	D4	L12	*B2	Q527	C5		
IC8	D3	L13	A2	Q528	C5		
IC9	D3	L14	B3	Q529	C5		
IC11	E2	L15	*C4	Q530	C5		
IC12	D2	L501	G5	Q531	*B5		
IC13	C2	L502	G5	Q532	*B5		
IC15	B4	L503	G5	Q533	C5		
IC17	D2	L504	G5	Q534	C5		
IC18	D2	L506	G5	Q535	C5		
IC19	D2	L507	G6	Q536	*B5		
IC20	C2	L508	D6	Q537	*B5		
IC21	A2	L510	H4	Q538	C6		
IC22	B3	L511	H4	Q539	C6		
IC26	D3	L514	A5	Q540	C6		
IC27	D3	L515	A5	Q541	*B6		
IC28	C3	L800	E2	Q542	*B6		
IC29	B3	L801	F2	Q543	*D5		
IC30	B3	L802	G2	Q544	*D5		
IC31	C3	L803	G1	Q545	F5		
IC32	A4	L804	*E2	Q546	*F5		
IC33	*C4	L805	*E2	Q547	F5		
IC34	C4	L806	*E2	Q548	D6		
IC35	*C4	L807	F2	Q549	D6		
IC36	*C4	L808	*G2	Q550	D6		
IC37	C4	L809	*G2	Q551	D4		
IC38	B4	L810	K1	Q552	D4		
IC39	E3	L811	J1	Q553	E4		
IC500	B5	L812	K1	Q554	E4		
IC501	F5	L813	*E3	Q555	E4		
IC502	F5	L814	*E3	Q556	E4		
IC503	E5	L815	*E3	Q557	E4		
IC504	F5	L816	*E4	Q560	F4		
IC505	F5	L817	J1	Q561	F4		
IC507	E5	L818	J1	Q562	F4		
IC509	F6	L1000	J2	Q563	F4		
IC510	F6	L1001	J2	Q564	F4		
IC512	E6	L1002	J3	Q565	F4		
IC519	B5	L1003	J3	Q566	G4		
IC520	B5	L1004	*J3	Q567	G4		
IC521	B6	L1005	*J4	Q568	G4		
IC522	D4(#2)	L1006	*J4(#1)	Q569	G4		
IC803	G2	L1007	K4	Q570	G4		
IC804	K2	L1008	H5	Q571	G4		
IC805	K2	L1009	G5	Q572	D5		
IC806	*F3	L1010	L5	Q573	D5		
IC807	F3	L1011	L5	Q574	D5		
IC808	*F3	L1012	L5	Q576	D6		
IC809	F3	L1014	J3	Q577	D6		
IC810	G3	L1015	J3	Q578	D6		
IC811	*G3			Q800	*F1(#1)		
IC812	G3	Q1	*E1	Q801	*F1		
IC813	H3	Q2	*D1	Q802	*F1		
		Q3	*D1	Q803	G1		
		Q4	*D1	Q804	*G1		

Q805	G1	Q1045	*K3
Q806	G1	Q1046	L3
Q807	*F1		
Q808	G1	RV1	D1
Q809	*F1	RV2	C2
Q810	*H1	RV3	C1
Q811	*F1	RV4	C2
Q812	G1	RV5	C3
Q813	*G1	RV6	A2
Q814	G1	RV7	A2
Q815	*G1	RV500	D5
Q816	G1	RV501	E5
Q817	*H1	RV502	E5
Q818	G1	RV503	E6
Q819	*H1	RV504	E6
Q820	H1	RV505	D5
Q821	E2	RV506	D5
Q822	F2	RV507	D5
Q823	F2	RV508	C5
Q824	F2	RV509	C5
Q825	*F2	RV510	C5
Q826	*F2	RV511	B5
Q827	*G2	RV512	C6
Q828	G2	RV513	C6
Q829	*H2	RV514	B6
Q830	*H2	RV515	E5
Q831	*H2	RV800	F2(#1)
Q832	*H2	RV801	G2
Q833	H2	RV802	H2
Q834	G2	RV803	G1
Q835	*H1	RV804	H1
Q836	*J2	RV805	F2
Q837	J2	RV806	F2
Q838	J1	RV807	F2
Q839	G2	RV808	G2
Q840	F2	RV809	H2
Q841	F2	RV810	J2
Q842	*K2	RV811	G3
Q843	*K1	RV812	H3
Q844	*H1	RV813	K1
Q845	H2	RV814	K1
Q846	H1	RV1000	H6
Q847	H1	RV1001	H5
Q848	H2	RV1002	L4
Q849	H1	RV1003	K3
Q850	H1		
Q851	H1	S1	B4(#1)
Q852	H2	S2	B4
Q853	G2	S3	A3
Q854	F3	S4	A4(#1)
Q855	G3	S800	A4
Q856	F4	S801	A4
Q857	G4	S1000	H5
Q1000	J2		
Q1001	J2	TP1	C3
Q1002	K2	TP2	J5
Q1003	K2	TP3	J6
Q1004	K2	TP4	J5
Q1005	K2	TP5	J5
Q1006	K2	TP7	J5
Q1007	L2	TP15	L2
Q1008	J2	TP17	L2
Q1009	K2	TP501	C5
Q1010	K2	TP502	C5
Q1011	L2	TP503	C6
Q1012	J2	TP505	D5
Q1013	J2	TP506	D5
Q1014	J3	TP507	D5
Q1015	K2		
Q1016	K2	#1: ES-20	
Q1017	K3	#2: ES-20P	
Q1018	K2		
Q1019	K2		
Q1020	K3		
Q1021	K2		
Q1022	L2		
Q1023	L3		
Q1024	L3		
Q1025	J4		
Q1026	J4		
Q1027	J4		
Q1028	*J3		
Q1029	*K3		
Q1030	K3		
Q1031	K3		
Q1032	G5		
Q1033	G5		
Q1034	*H5		
Q1035	*H5		
Q1036	*H5		
Q1037	*K5		
Q1038	*K6		
Q1039	*K5		
Q1041	*J3		
Q1042	J3		
Q1043	*K3		
Q1044	K3		

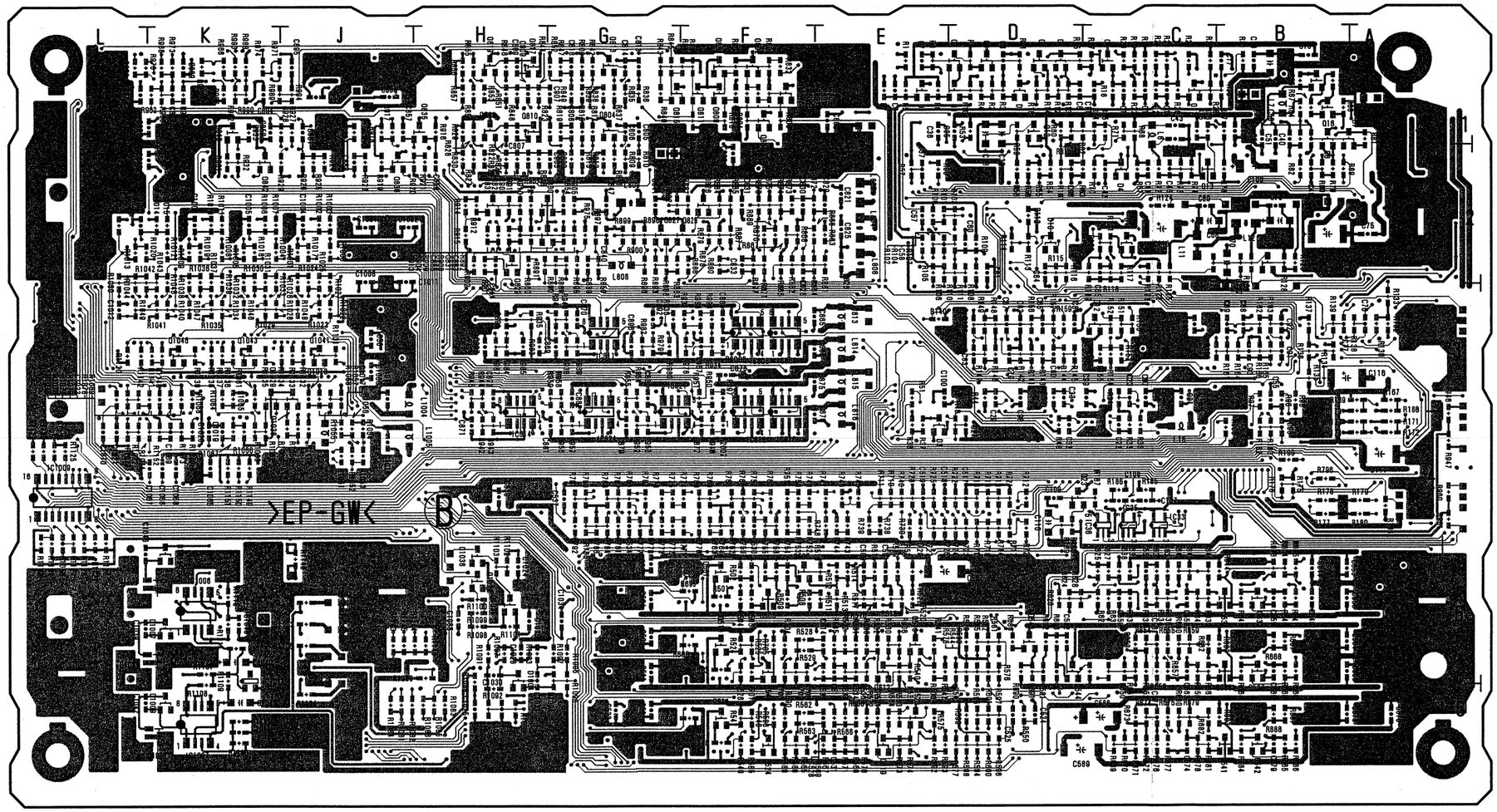

ES-20 -B SIDE-
SUFFIX: -12

CCU-TX7 (J) : S/N 30061 and higher
CCU-TX7 (UC) : S/N 10601 and higher
CCU-TX7 (CE) : S/N 40251 and higher

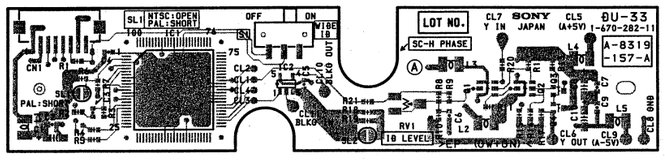

DU-33 -A SIDE-
SUFFIX: -11

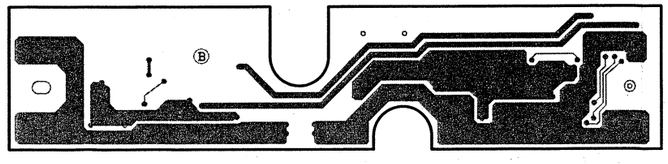

DU-33 -B SIDE-
SUFFIX: -11

CCU-TX7 (J) : S/N 30001-30035
CCU-TX7 (UC) : S/N 10001-10240
CCU-TX7 (CE) : S/N 40001-40185

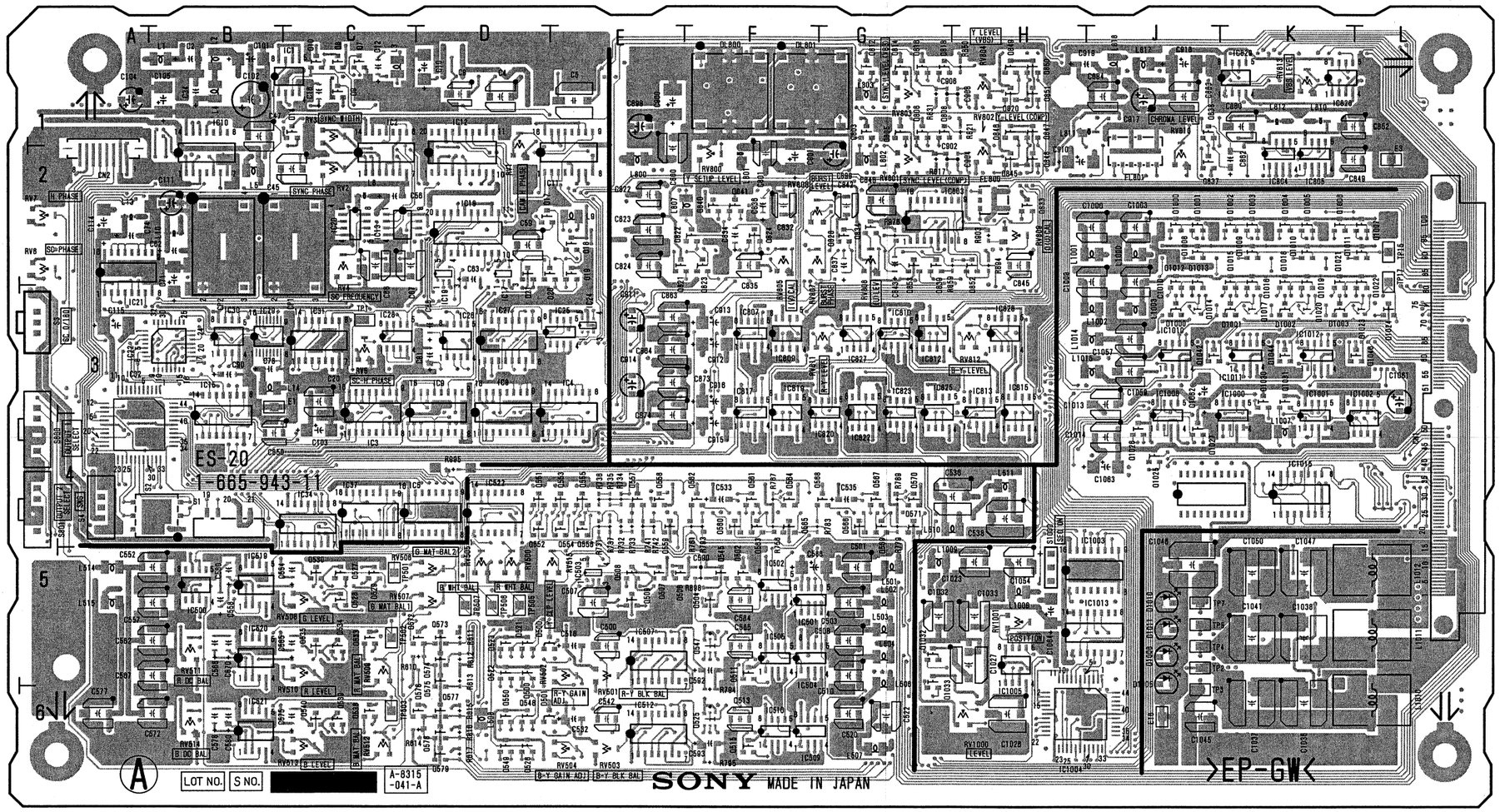

ES-20 -A SIDE-
SUFFIX: -11

*: B SIDE

CN1	L3	IC813	H3	L1002	J3		
CN2	A2	*IC814	H3	L1003	J3		
		IC815	H3	*L1004	J3		
CP1	B2	*IC816	F3	*L1005	J4		
CP2	B2	IC817	F3	*L1006	J4		
		IC818	F3	L1007	K4		
DL800	F1	IC819	F3	L1008	H5		
DL801	F1	IC820	G3	L1009	G5		
		*IC821	G3	L1010	L5		
*D1	D1	IC822	G3	L1011	L5		
*D2	D1	IC823	G3	L1012	L5		
*D3	E4	*IC824	G3	L1014	J3		
*D4	C2	IC825	G3	L1015	J3		
*D6	B1	IC826	K1				
*D7	B1	IC827	G3	*Q1	E1		
*D10	D2	IC828	H3	*Q2	D1		
*D11	C2	IC829	K1	*Q3	D1		
*D12	C3	IC1000		*Q4	D1		
D500	D5	K4		*Q5	D1		
D501	D6	IC1001		*Q6	C1		
D1000	J3	K4		Q7	C1		
D1001	K3	IC1002		Q8	C1		
D1002	K3	L4		Q9	C1		
D1003	K3	IC1003		Q10	C1		
*D1004	H5	J5		*Q11	C1		
D1005	J5	H6		*Q12	D1		
D1006	J5	IC1004		*Q13	C2		
*D1007	K5	H5		Q14	C1		
*D1009	K6	IC1005		*Q15	B1		
D1010	J5	*IC1006		*Q16	B1		
D1011	J5	K5		Q17	D2		
*D1012	K5	*IC1007		Q18	E2		
		IC1008		Q19	E2		
E1	B3	J4		Q20	D2		
E3	L2	*IC1009		Q21	D2		
E16	J6	L4		*Q22	B2		
		IC1010		*Q23	D4		
FL800	H2	J3		Q500	D5		
FL801	J2	IC1011		*Q501	F5		
		K3		Q502	F5		
IC1	C1	IC1012		*Q503	F5		
IC2	C2	K3		Q504	F5		
IC3	C3	IC1013		*Q505	F5		
IC4	E3	J5		Q506	E5		
IC5	D4	*IC1014		Q507	E5		
IC8	D3	K5		Q508	E5		
IC9	D3	IC1015		Q509	E5		
IC10	B2	K4		*Q510	F5		
IC11	E2			Q511	F5		
IC12	D2	L1	B1	*Q512	E5		
IC13	C2	L2	B1	*Q513	E5		
IC15	B4	L3	C1	*Q514	F6		
IC17	D2	L4	B1	Q515	F6		
IC18	D2	L5	B2	*Q519	E6		
IC19	D2	*L6	C1	*Q520	E6		
IC20	C2	*L7	B1	Q521	D5		
IC21	A2	L8	C2	Q522	D5		
IC22	B3	L9	E2	Q523	D5		
IC24	E3	L10	B2	*Q524	F6		
IC25	E3	*L11	C2	Q525	F6		
IC26	D3	*L12	B2	Q526	D6		
IC27	D3	L13	A2	Q527	C5		
IC28	C3	L14	B3	Q528	C5		
IC29	B3	*L15	C4	Q529	C5		
IC30	B3	L501	G5	Q530	C5		
IC31	C3	L502	G5	*Q531	B5		
IC32	A4	L503	G5	*Q532	B5		
*IC33	C4	L504	G5	Q533	C5		
IC34	C4	L506	G5	Q534	C5		
*IC35	C4	L507	G6	Q535	C5		
*IC36	C4	L508	D6	*Q536	B5		
IC37	C4	L510	H4	*Q537	B5		
IC500	B5	L511	H4	Q538	C6		
IC501	F5	L514	A5	Q539	C6		
IC502	F5	L515	A5	Q540	C6		
IC503	E5	L800	E2	*Q541	B6		
IC504	F5	L801	F2	*Q542	B6		
IC505	F5	L802	G2	*Q543	D5		
IC507	E5	L803	G1	*Q544	D5		
IC509	F6	*L804	E2	Q545	F5		
IC510	F6	*L805	E2	*Q546	F5		
IC512	E6	*L806	E2	Q547	F5		
IC519	B5	L807	F2	Q548	D6		
IC520	B5	*L808	G2	Q549	D6		
IC521	B6	*L809	G2	Q550	D6		
IC803	G2	L810	K1	Q551	D4		
IC804	K2	L811	J1	Q552	D4		
IC805	K2	L812	K1	Q553	E4		
*IC806	F3	*L813	E3	Q554	E4		
IC807	F3	*L814	E3	Q555	E4		
*IC808	F3	*L815	E3	Q556	E4		
IC809	F3	*L816	E4	Q557	E4		
IC810	G3	L817	J1	Q558	E4		
*IC811	G3	L818	J1	Q559	E4		
IC812	G3	L1000	J2	Q560	F4		
		L1001	J2	Q561	F4		
				Q562	F4		

Q563	F4	Q1026	J4
Q564	F4	Q1027	J4
Q565	F4	*Q1028	J3
Q566	G4	*Q1029	K3
Q567	G4	Q1030	K3
Q568	G4	Q1031	K3
Q569	G4	Q1032	G5
Q570	G4	Q1033	G5
Q571	G4	*Q1034	H5
Q572	D5	*Q1035	H5
Q573	D5	*Q1036	H5
Q574	D5	*Q1037	K5
Q575	D5	*Q1038	K6
Q576	D6	*Q1039	K5
Q577	D6	*Q1041	J3
Q578	D6	Q1042	J3
Q579	D6	*Q1043	K3
*Q800	F1	Q1044	K3
*Q801	F1	*Q1045	K3
*Q802	F1	Q1046	L3
Q803	G1		
*Q804	G1	RV1	D1
Q805	G1	RV2	C2
Q806	G1	RV3	C1
*Q807	F1	RV4	C2
Q808	G1	RV5	C3
*Q809	F1	RV6	A2
*Q810	H1	RV7	A2
*Q811	F1	RV500	D5
Q812	G1	RV501	E5
*Q813	G1	RV502	E5
Q814	G1	RV503	B6
*Q815	G1	RV504	E6
Q816	G1	RV505	D5
*Q817	H1	RV506	D5
Q818	G1	RV507	D5
*Q819	H1	RV508	C5
Q820	H1	RV509	C5
Q821	E2	RV510	C5
Q822	F2	RV511	B5
Q823	F2	RV512	C6
Q824	F2	RV513	C6
*Q825	F2	RV514	B6
*Q826	F2	RV515	E5
*Q827	G2	RV800	F2
Q828	G2	RV801	G2
*Q829	H2	RV802	H2
*Q830	H2	RV803	G1
*Q831	H2	RV804	H1
*Q832	H2	RV805	F2
Q833	H2	RV806	F2
Q834	G2	RV807	F2
*Q835	H1	RV808	G2
*Q836	J2	RV809	H2
Q837	J2	RV810	J2
Q838	J1	RV811	G3
Q839	G2	RV812	H3
Q840	F2	RV813	K1
Q841	F2	RV1000	
*Q842	K2	H6	
*Q843	K1	RV1001	
*Q844	H1	H5	
Q845	H2		
Q846	H1	S1	B4
Q847	H1	S2	B4
Q848	H2	S3	A3
Q849	H1	S4	A4
Q850	H1	S800	A4
Q851	H1	S801	A4
Q852	H2	S1000	H5
Q853	G2		
Q1000	J2	TP1	C3
Q1001	J2	TP2	J5
Q1002	K2	TP3	J6
Q1003	K2	TP4	J5
Q1004	K2	TP5	J5
Q1005	K2	TP7	J5
Q1006	K2	TP15	L2
Q1007	L2	TP17	L2
Q1008	J2	TP501	C5
Q1009	K2	TP502	C5
Q1010	K2	TP503	C6
Q1011	L2	TP505	D5
Q1012	J2	TP506	D5
Q1013	J2	TP507	D5
Q1014	J3		
Q1015	K2		
Q1016	K2		
Q1017	K3		
Q1018	K2		
Q1019	K2		
Q1020	K3		
Q1021	K2		
Q1022	L2		
Q1023	L3		
Q1024	L3		
Q1025	J4		

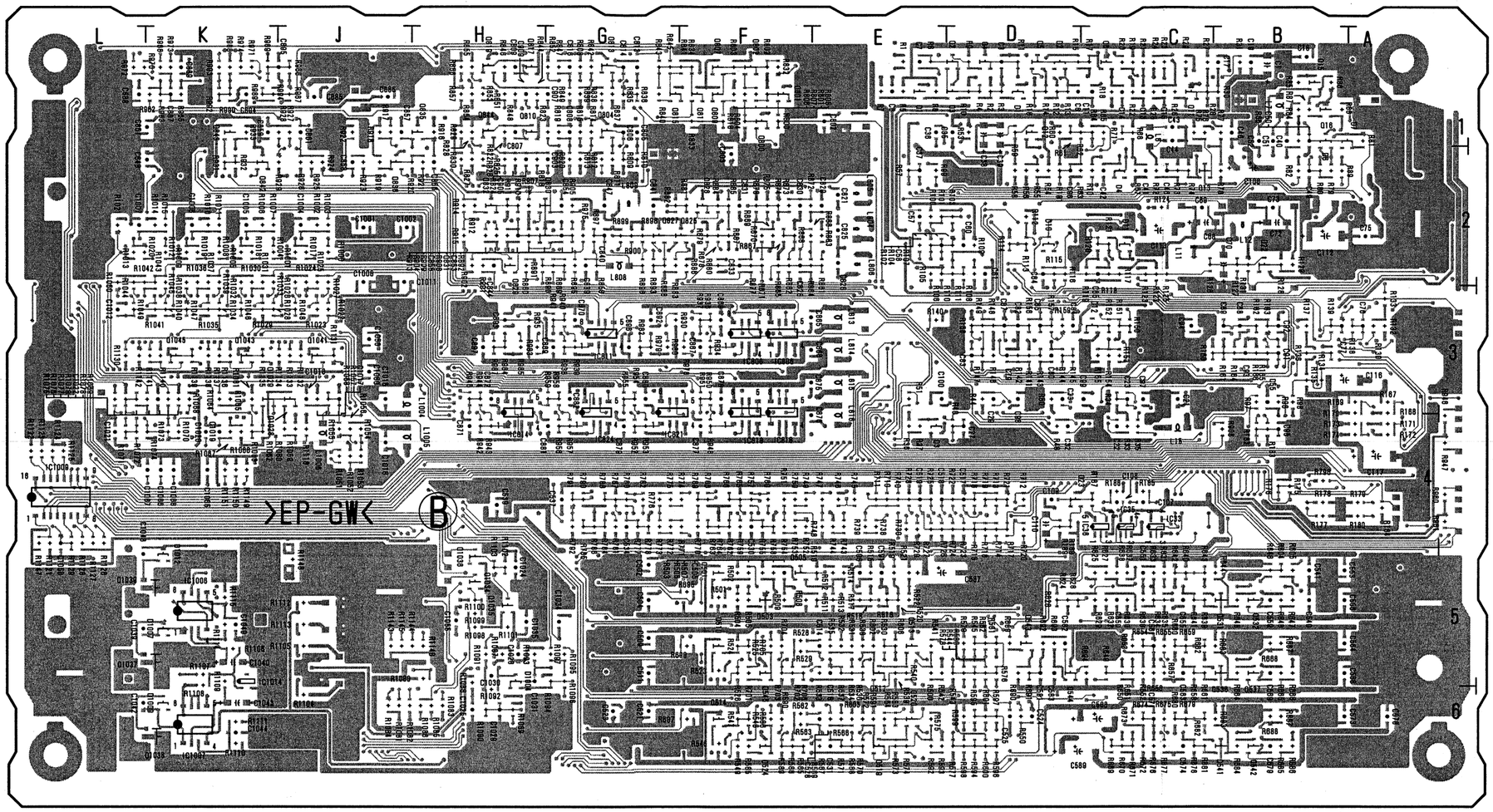

ES-20 -B SIDE-
SUFFIX: -11

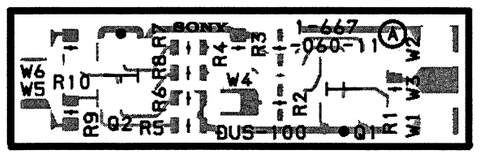

DUS-100 -A SIDE-
SUFFIX: -11

CCU-TX7 (J) : S/N 30036 and higher
CCU-TX7 (UC) : S/N 10241 and higher
CCU-TX7 (CE) : S/N 40186 and higher

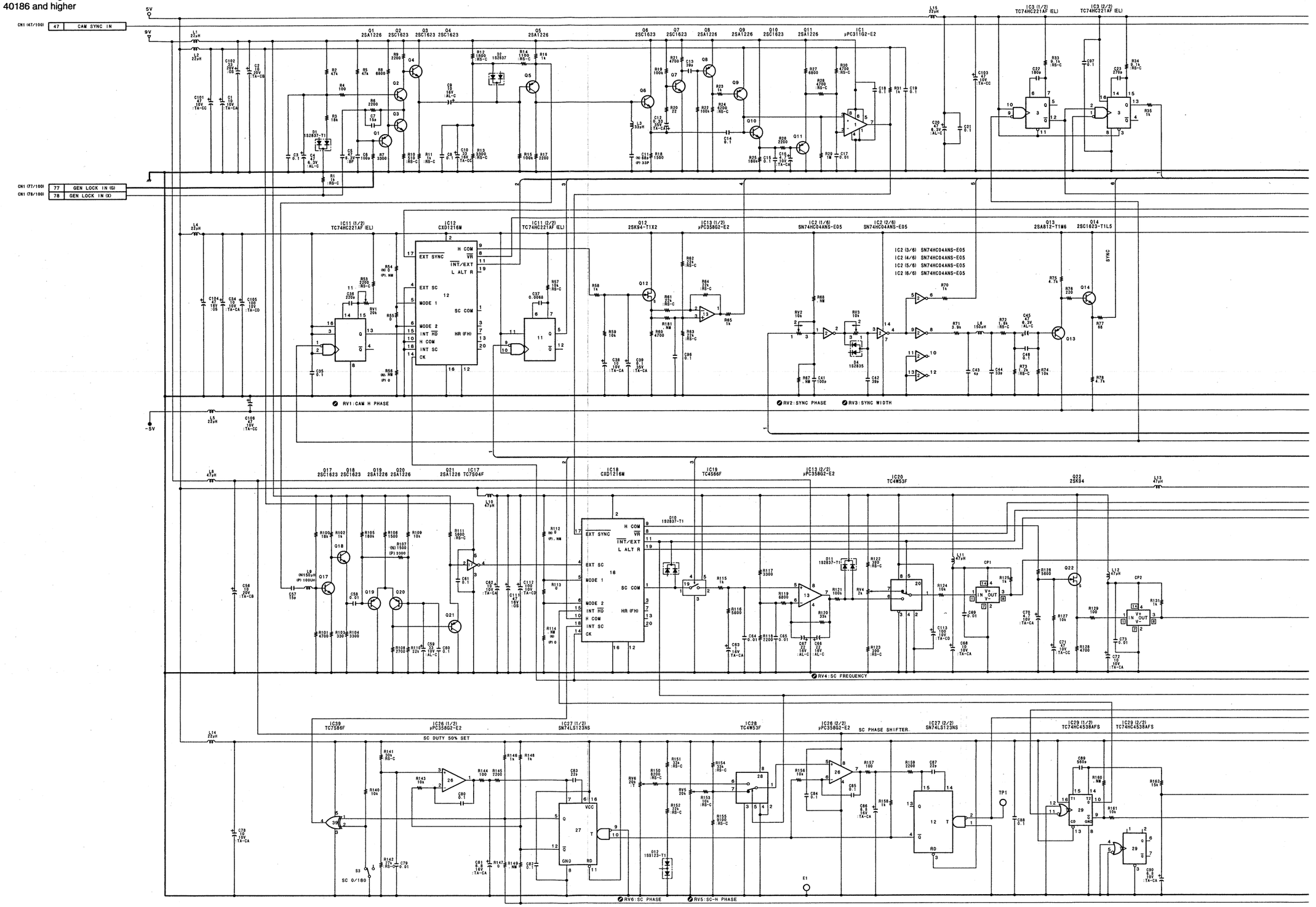

8-24 (a) 8-24 (a)

CCU-TX7/V2

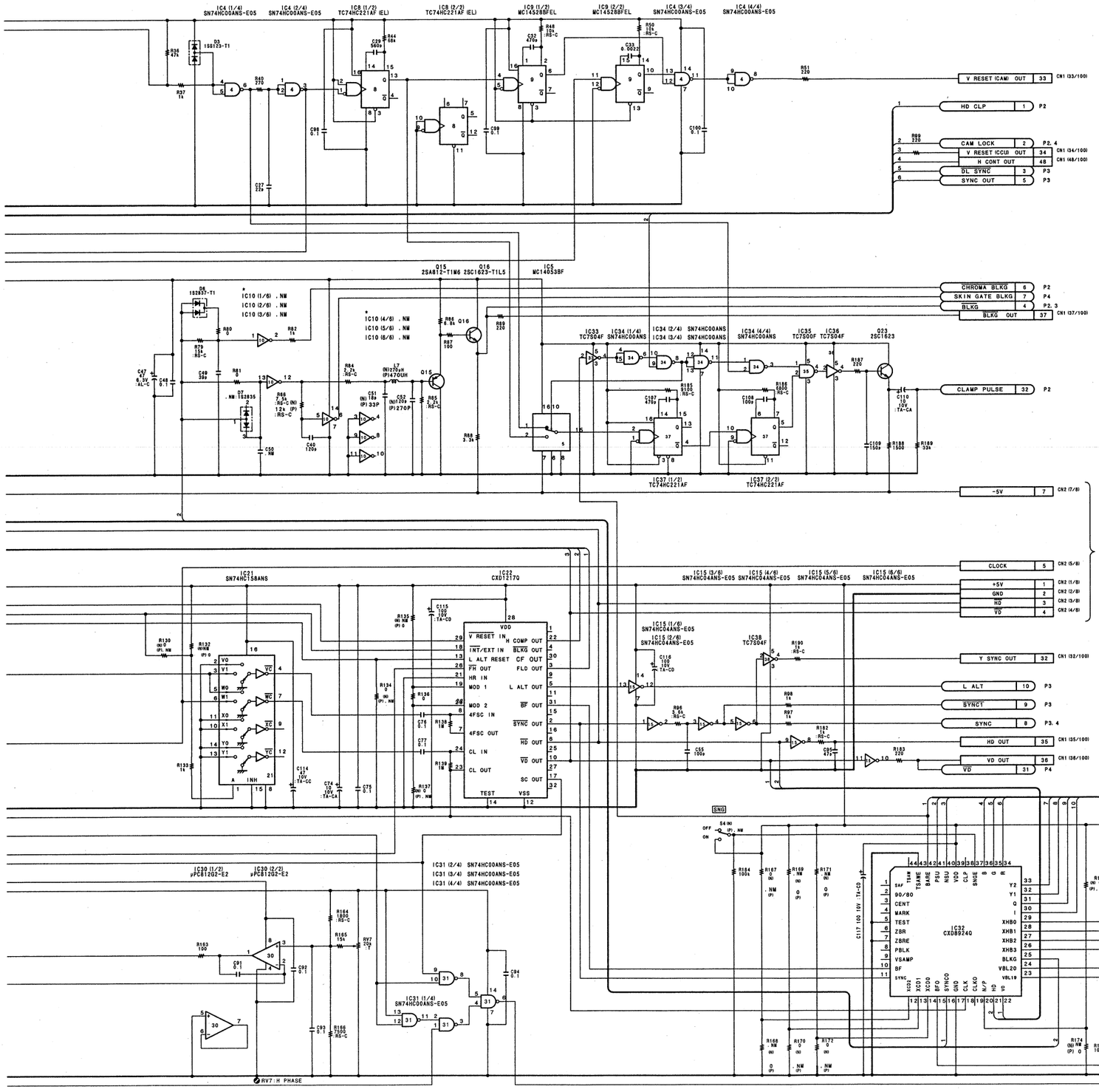

NOTE

REF No.	CHANGE INFORMATION	SERIAL No.
IC10	DELETE	10601- (UC) 30061- (J) 40251- (CE)

NOTE
1. , NM: NO MOUNT
2. (N) : NTSC only
3. (P) : PAL only

CCU-TX7 (J) : S/N 30036 and higher
CCU-TX7 (UC) : S/N 10241 and higher
CCU-TX7 (CE) : S/N 40186 and higher

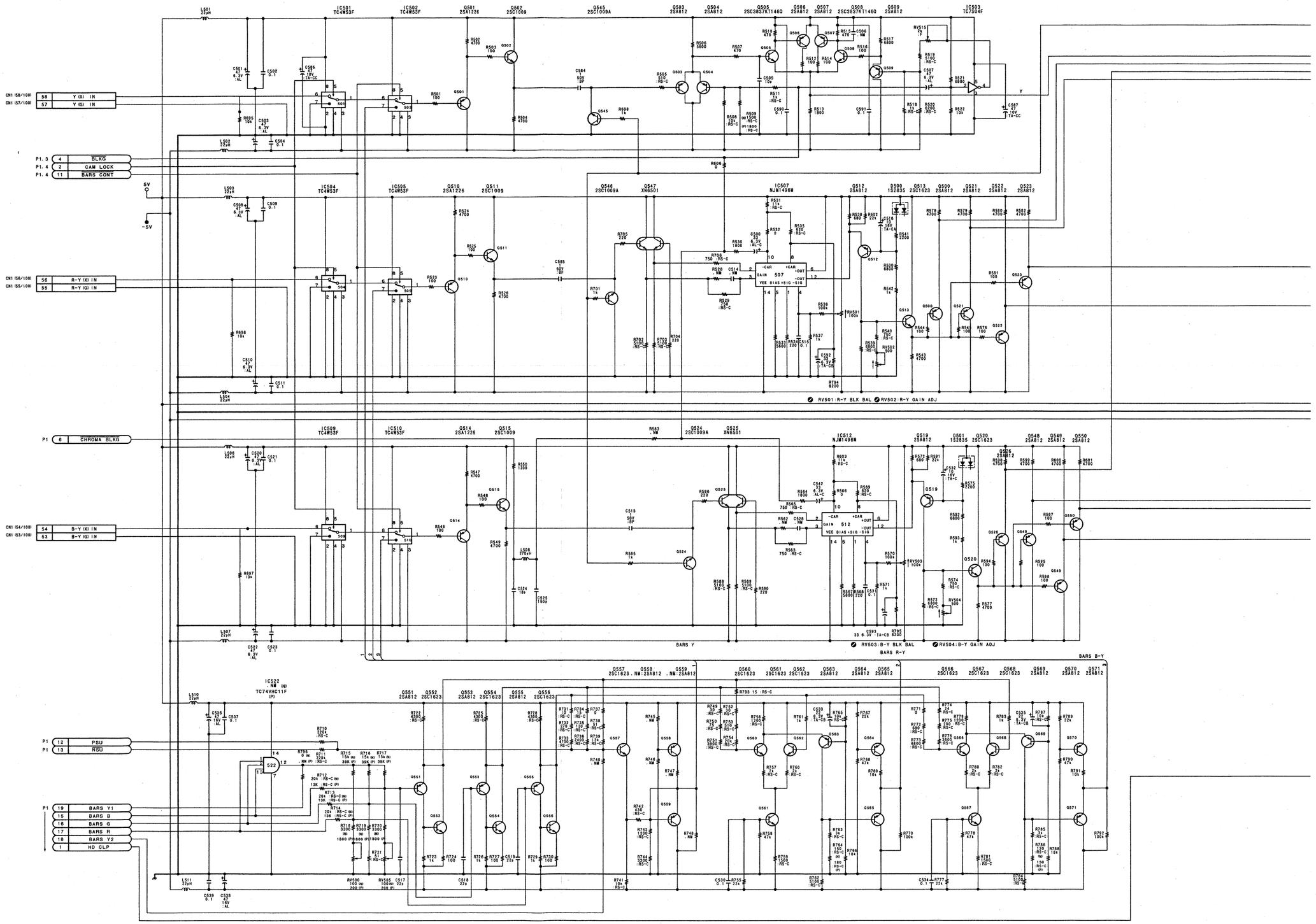

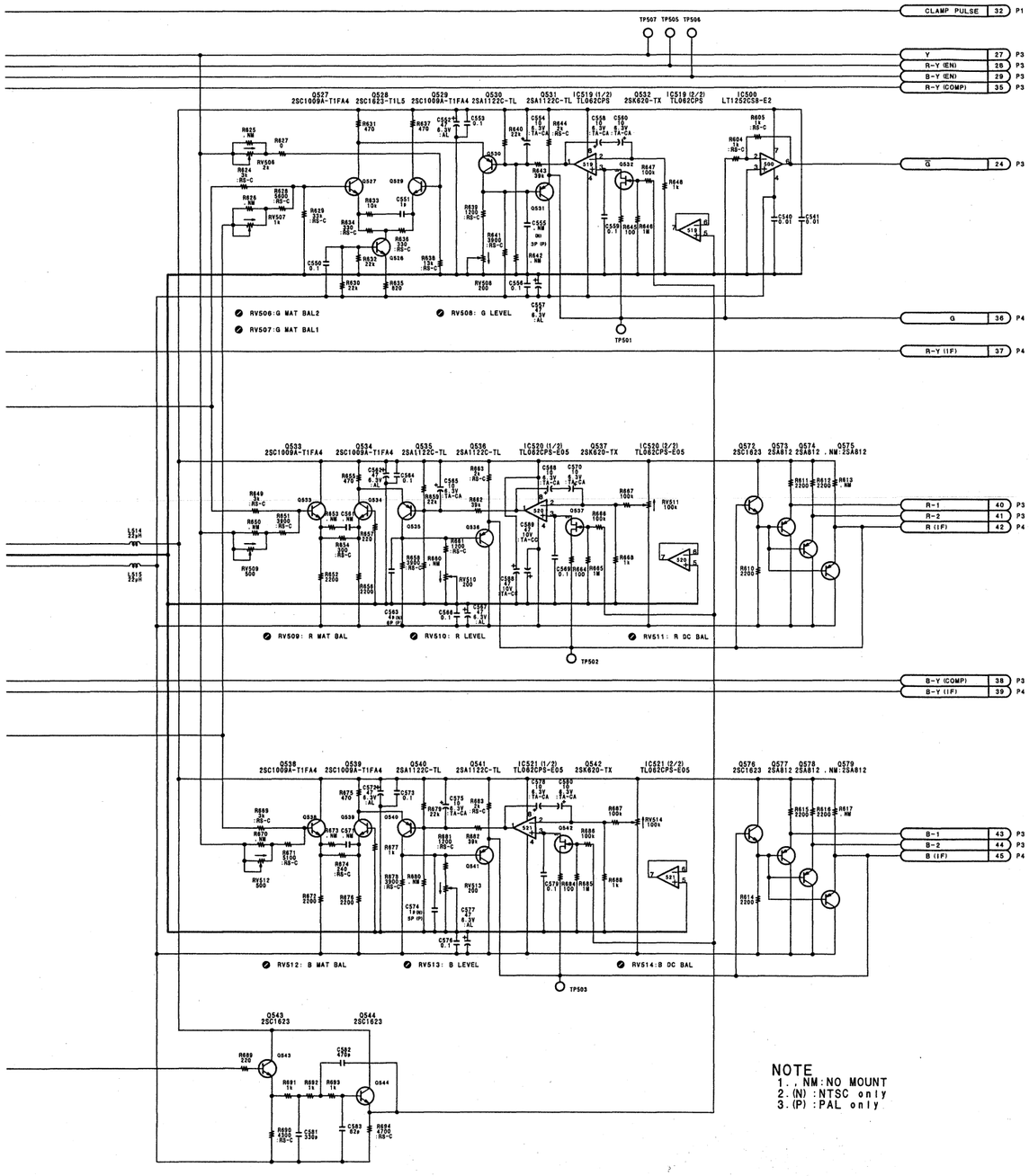
CLAMP PULSE 32 P1
TP507 TP505 TP506
Y 27 P3
R-Y (EN) 26 P3
B-Y (EN) 29 P3
R-Y (COMP) 35 P3
G 24 P3
G 36 P4
R-Y (IF) 37 P4
TP501
R-1 40 P3
R-2 41 P3
R (IF) 42 P4
TP502
B-Y (COMP) 38 P3
B-Y (IF) 39 P4
B-1 43 P3
B-2 44 P3
B (IF) 45 P4
TP503
RV506:G MAT BAL2
RV507:G MAT BAL1
RV508: G LEVEL
RV509: R MAT BAL
RV510: R LEVEL
RV511: R DC BAL
RV512: B MAT BAL
RV513: B LEVEL
RV514:B DC BAL
NOTE
1. . NM:NO MOUNT
2. (N) :NTSC only
3. (P) :PAL only

CCU-TX7 (J) : S/N 30036 and higher
CCU-TX7 (UC) : S/N 10241 and higher
CCU-TX7 (CE) : S/N 40186 and higher

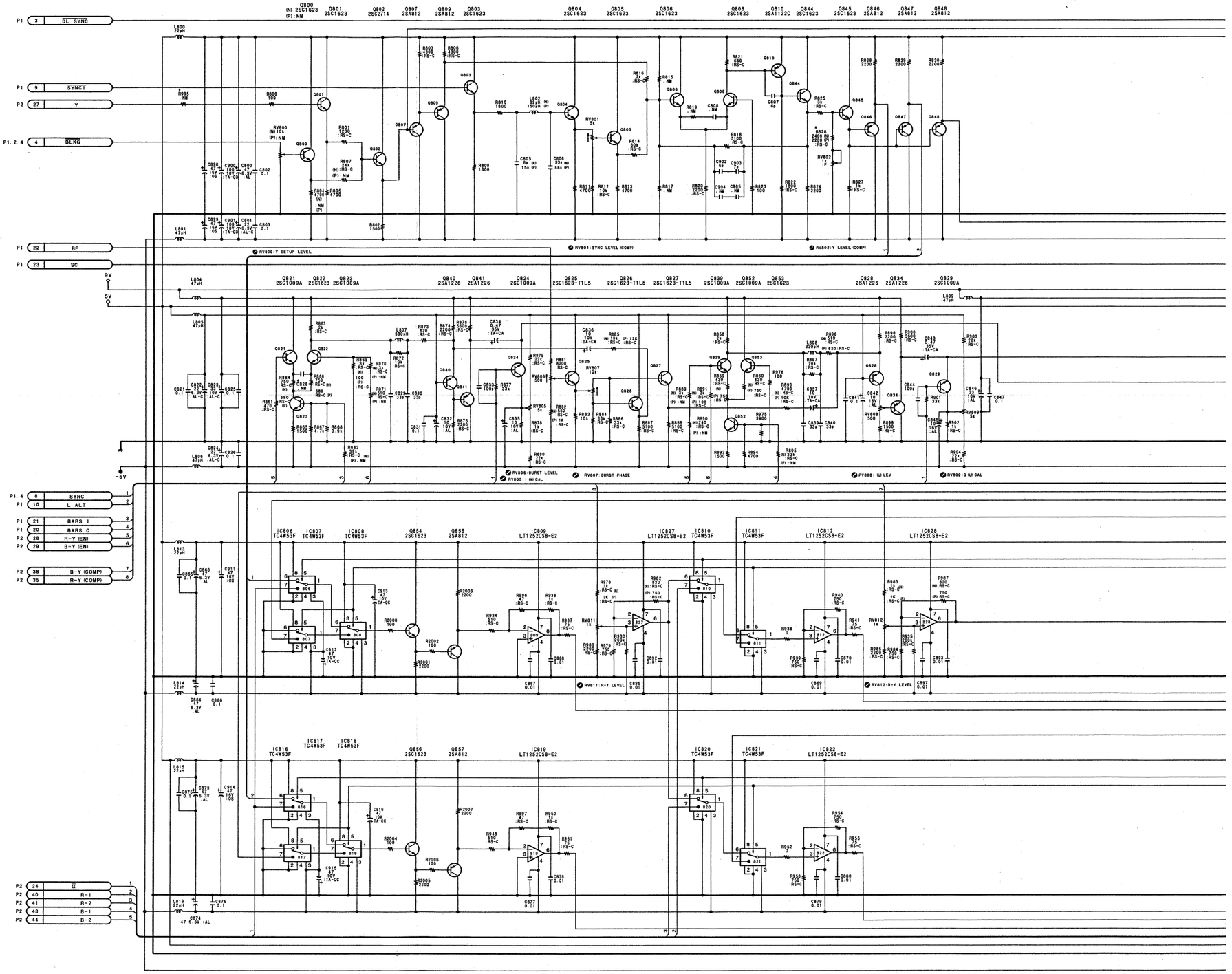

ES-20 (3/4)

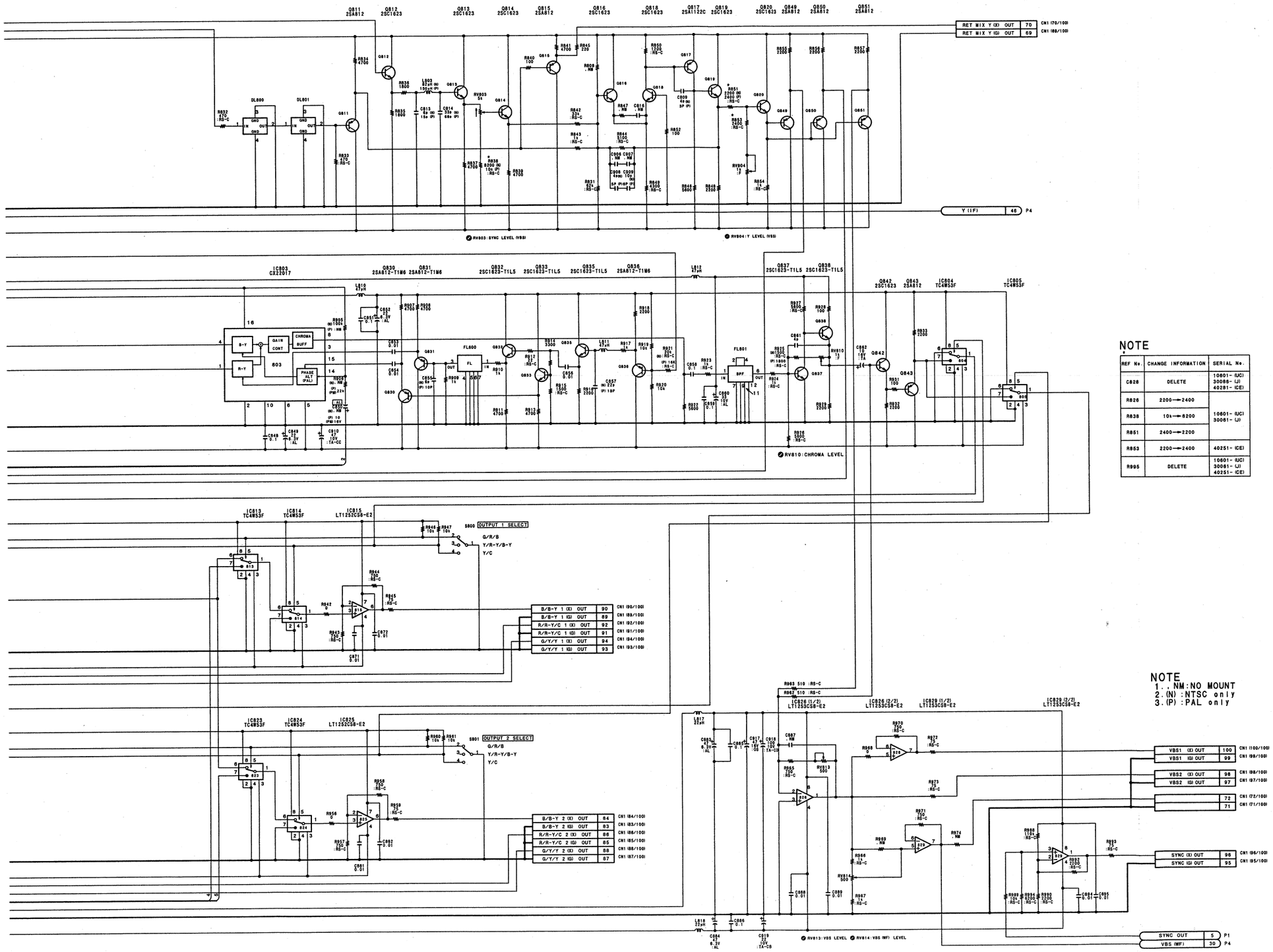

NOTE

REF No.	CHANGE INFORMATION	SERIAL No.
C828	DELETE	10601- (UC) 30086- (J) 40281- (CE)
R826	2200→2400	
R838	10k→8200	10601- (UC) 30061- (J)
R851	2400→2200	
R853	2200→2400	40251- (CE)
R995	DELETE	10601- (UC) 30061- (J) 40251- (CE)

NOTE
1. . NM:NO MOUNT
2. (N) :NTSC only
3. (P) :PAL only

ES-20 (4/4)

CCU-TX7 (J) : S/N 30036 and higher
CCU-TX7 (UC) : S/N 10241 and higher
CCU-TX7 (CE) : S/N 40186 and higher

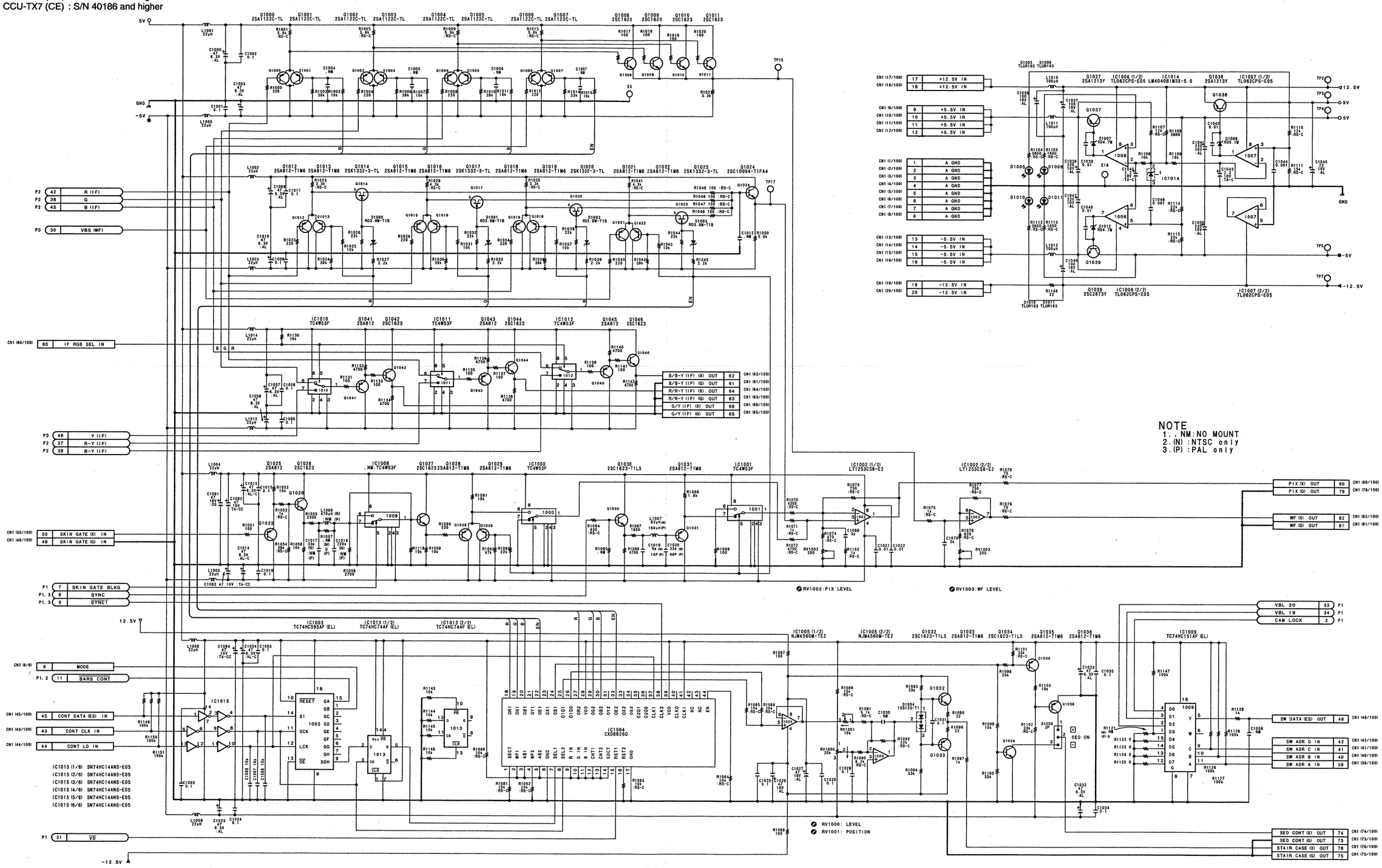

NOTE
1. , NM:NO MOUNT
2. (N) :NTSC only
3. (P) :PAL only

ES-20 (4/4)
B-CCUTX7-ES20-12-M

CCU-TX7/V2

CCU-TX7 (J) : S/N 30061 and higher
CCU-TX7 (UC) : S/N 10601 and higher
CCU-TX7 (CE) : S/N 40251 and higher

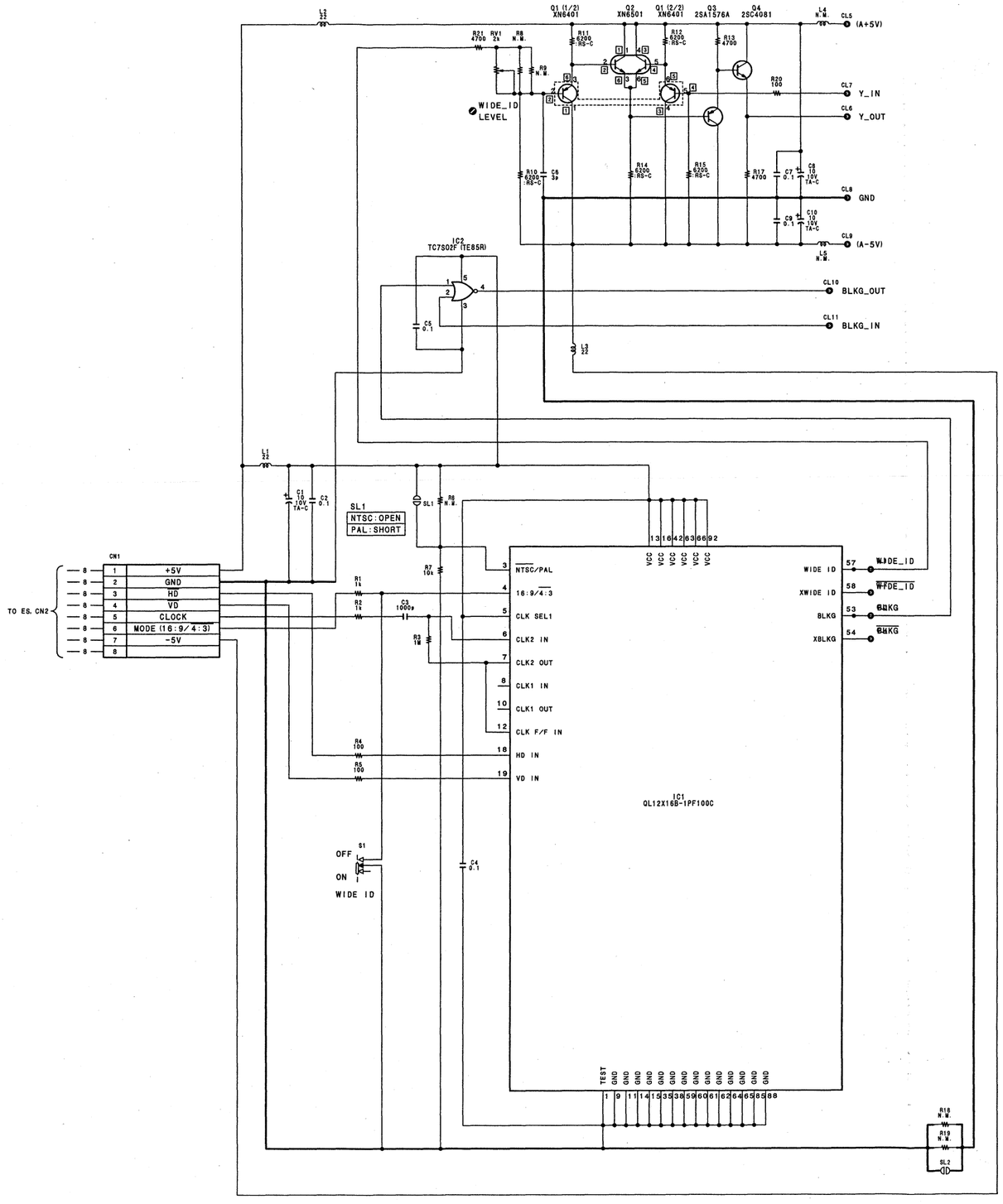

8-31 (a) 8-31 (a)

DU-33
B-CCUTX7-DUS-33-M

CCU-TX7/V2

A B C D E F G H

1 2 3 4 5

CCU-TX7 (J) : S/N 30001-30035
CCU-TX7 (UC) : S/N 10001-10240
CCU-TX7 (CE) : S/N 40001-40185

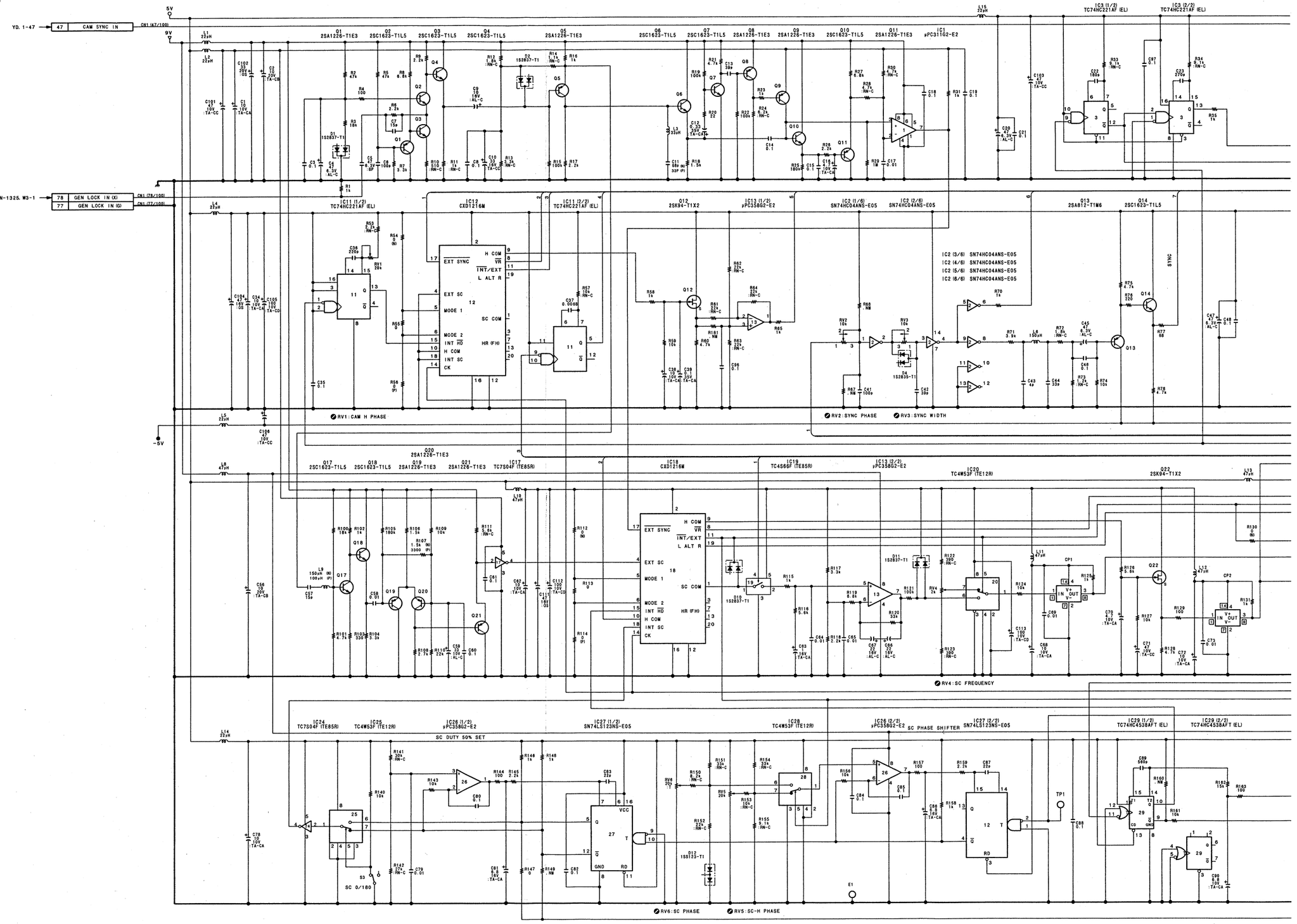

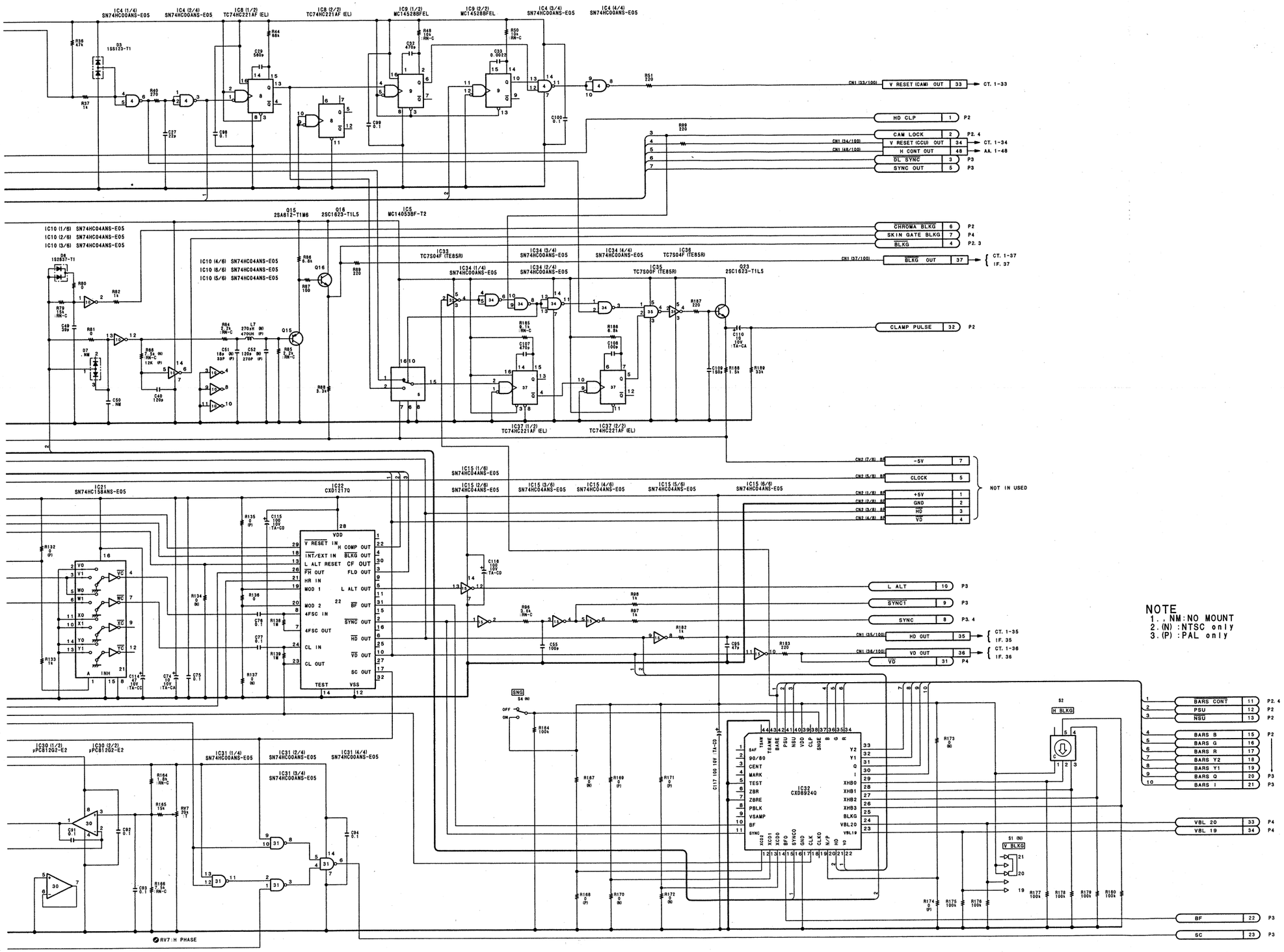

NOTE
1. . NM : NO MOUNT
2. (N) : NTSC only
3. (P) : PAL only

ES-20 (1/4)
B-CCUTX7-ES20/M

CCU-TX7/V2

8-25 8-25

I J K L M N O P

1 2 3 4 5

CCU-TX7 (J) : S/N 30001-30035
CCU-TX7 (UC) : S/N 10001-10240
CCU-TX7 (CE) : S/N 40001-40185

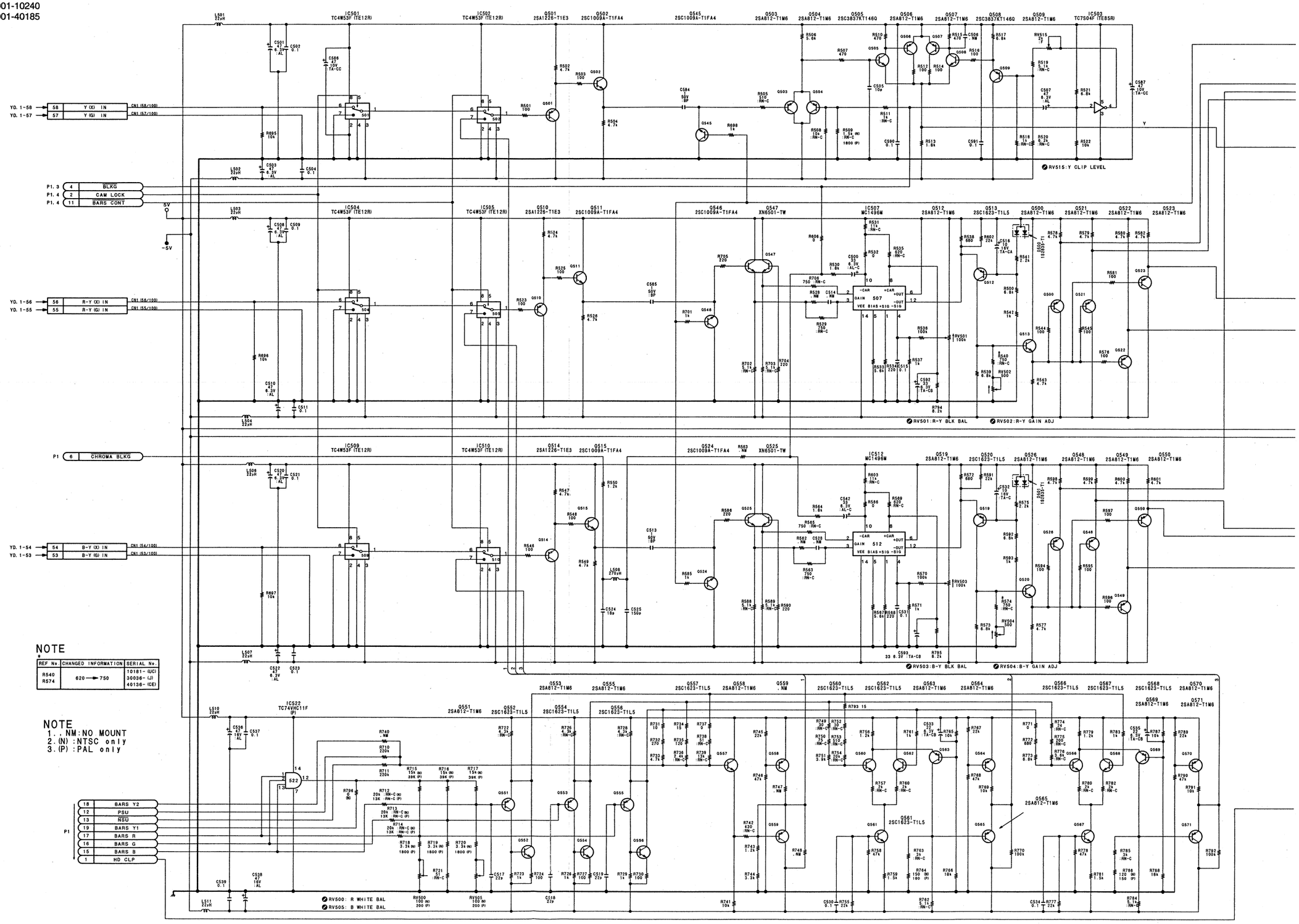

NOTE

REF No.	CHANGED INFORMATION	SERIAL No.
R540 R574	620 → 750	10181- (UC) 30036- (J) 40136- (CE)

NOTE
1. . NM:NO MOUNT
2. (N) :NTSC only
3. (P) :PAL only

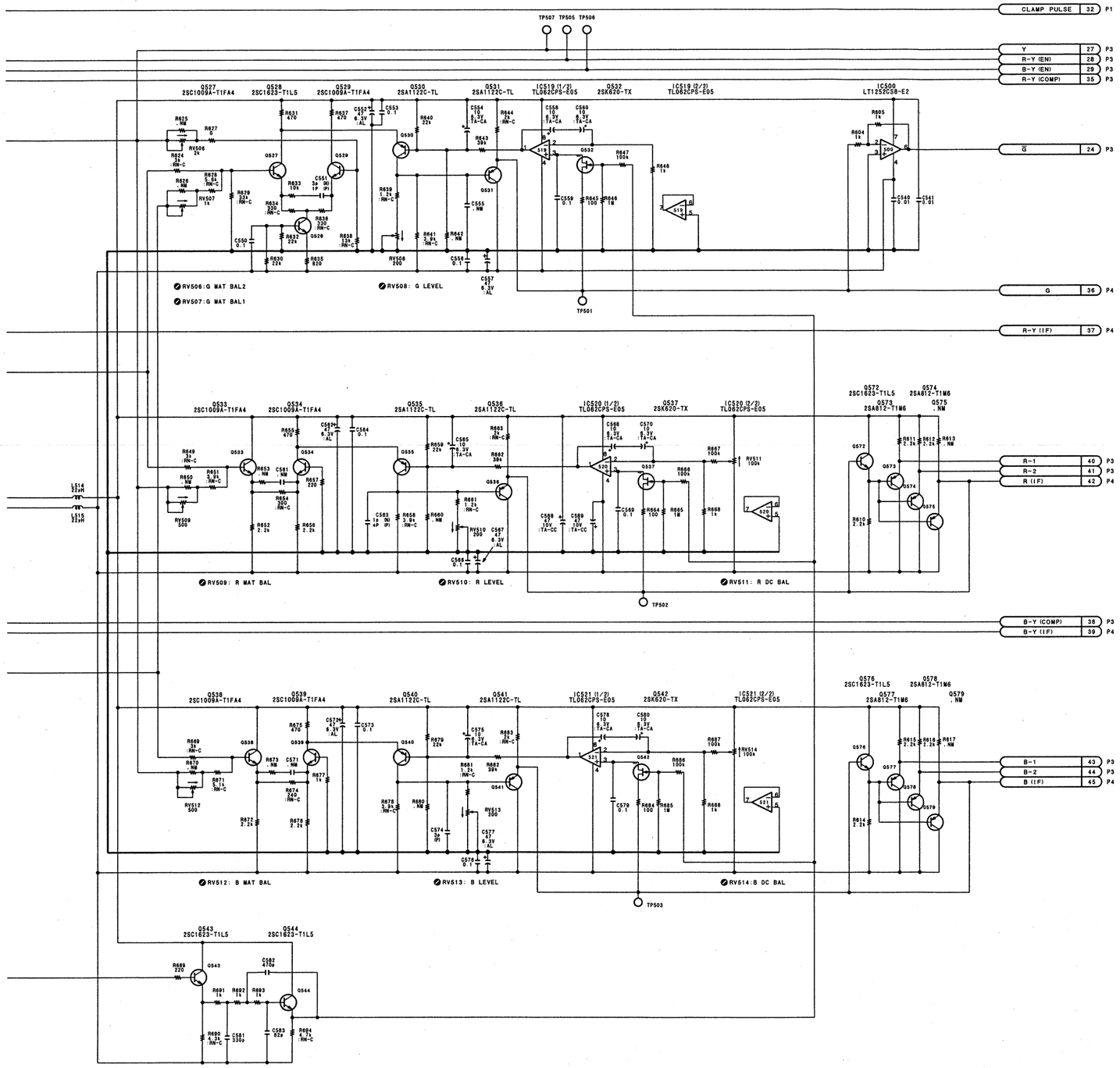
CLAMP PULSE 32 P1
Y 27 P3
R-Y (EN) 28 P3
B-Y (EN) 29 P3
R-Y (COMP) 35 P3
G 24 P3
G 36 P4
R-Y (IF) 37 P4
R-1 40 P3
R-2 41 P3
R (IF) 42 P4
B-Y (COMP) 38 P3
B-Y (IF) 39 P4
B-1 43 P3
B-2 44 P3
B (IF) 45 P4
TP507 TP505 TP506
TP501
TP502
TP503
RV506:G MAT BAL2
RV507:G MAT BAL1
RV508: G LEVEL
RV509: R MAT BAL
RV510: R LEVEL
RV511: R DC BAL
RV512: B MAT BAL
RV513: B LEVEL
RV514:B DC BAL
Q527 2SC1009A-T1FA4
Q528 2SC1623-T1L5
Q529 2SC1009A-T1FA4
Q530 2SA1122C-TL
Q531 2SA1122C-TL
IC519 (1/2) TL082CPS-E05
Q532 2SK620-TX
IC519 (2/2) TL082CPS-E05
IC500 LT1252CS8-E2
Q533 2SC1009A-T1FA4
Q534 2SC1009A-T1FA4
Q535 2SA1122C-TL
Q536 2SA1122C-TL
IC520 (1/2) TL082CPS-E05
Q537 2SK620-TX
IC520 (2/2) TL082CPS-E05
Q572 2SC1623-T1L5
Q573 2SA812-T1M6
Q574 2SA812-T1M6
Q575 .NM
Q538 2SC1009A-T1FA4
Q539 2SC1009A-T1FA4
Q540 2SA1122C-TL
Q541 2SA1122C-TL
IC521 (1/2) TL082CPS-E05
Q542 2SK620-TX
IC521 (2/2) TL082CPS-E05
Q576 2SC1623-T1L5
Q577 2SA812-T1M6
Q578 2SA812-T1M6
Q579 .NM
Q543 2SC1623-T1L5
Q544 2SC1623-T1L5
L514 22nH
L515 22nH

CCU-TX7 (J) : S/N 30001-30035
CCU-TX7 (UC) : S/N 10001-10240
CCU-TX7 (CE) : S/N 40001-40185

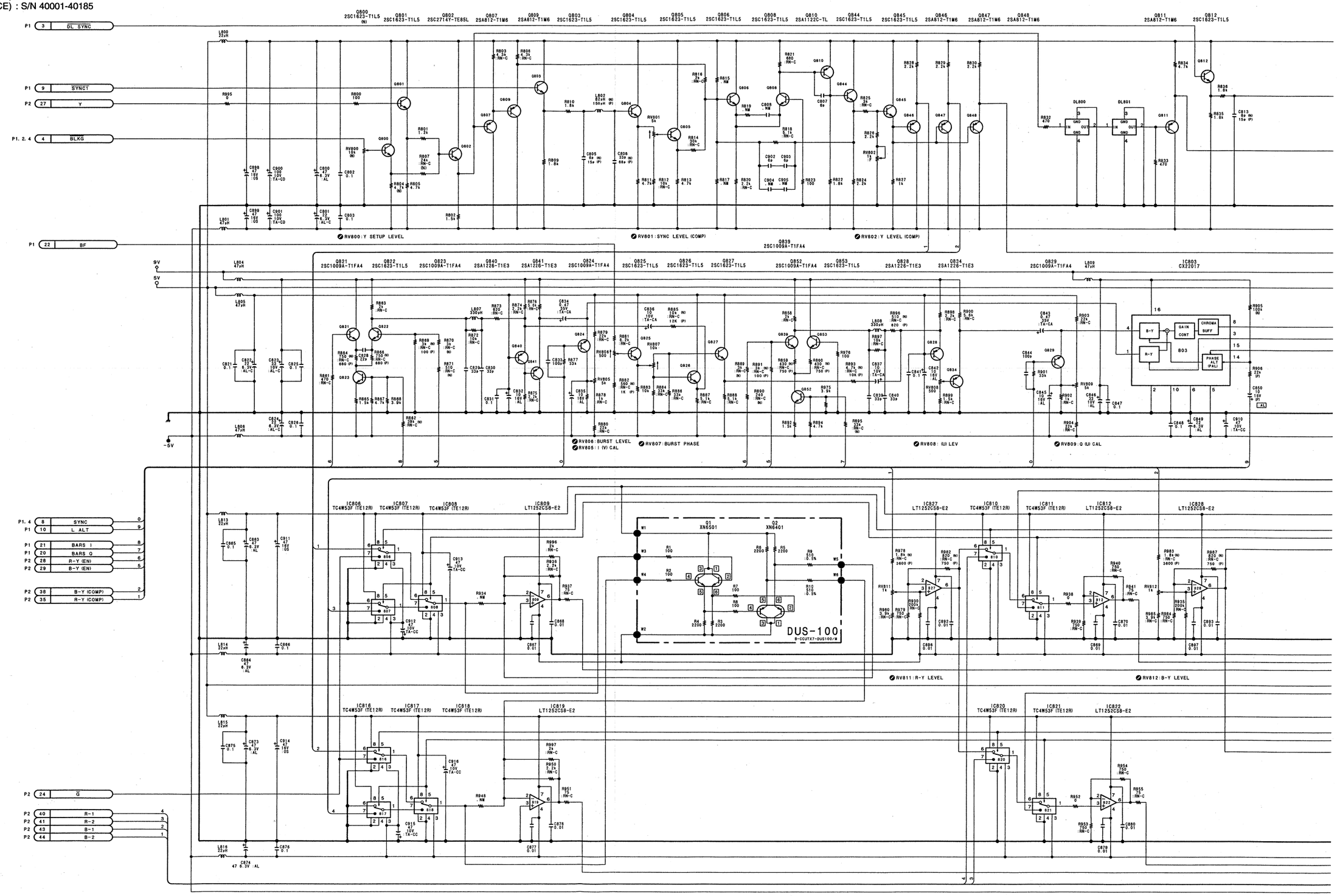

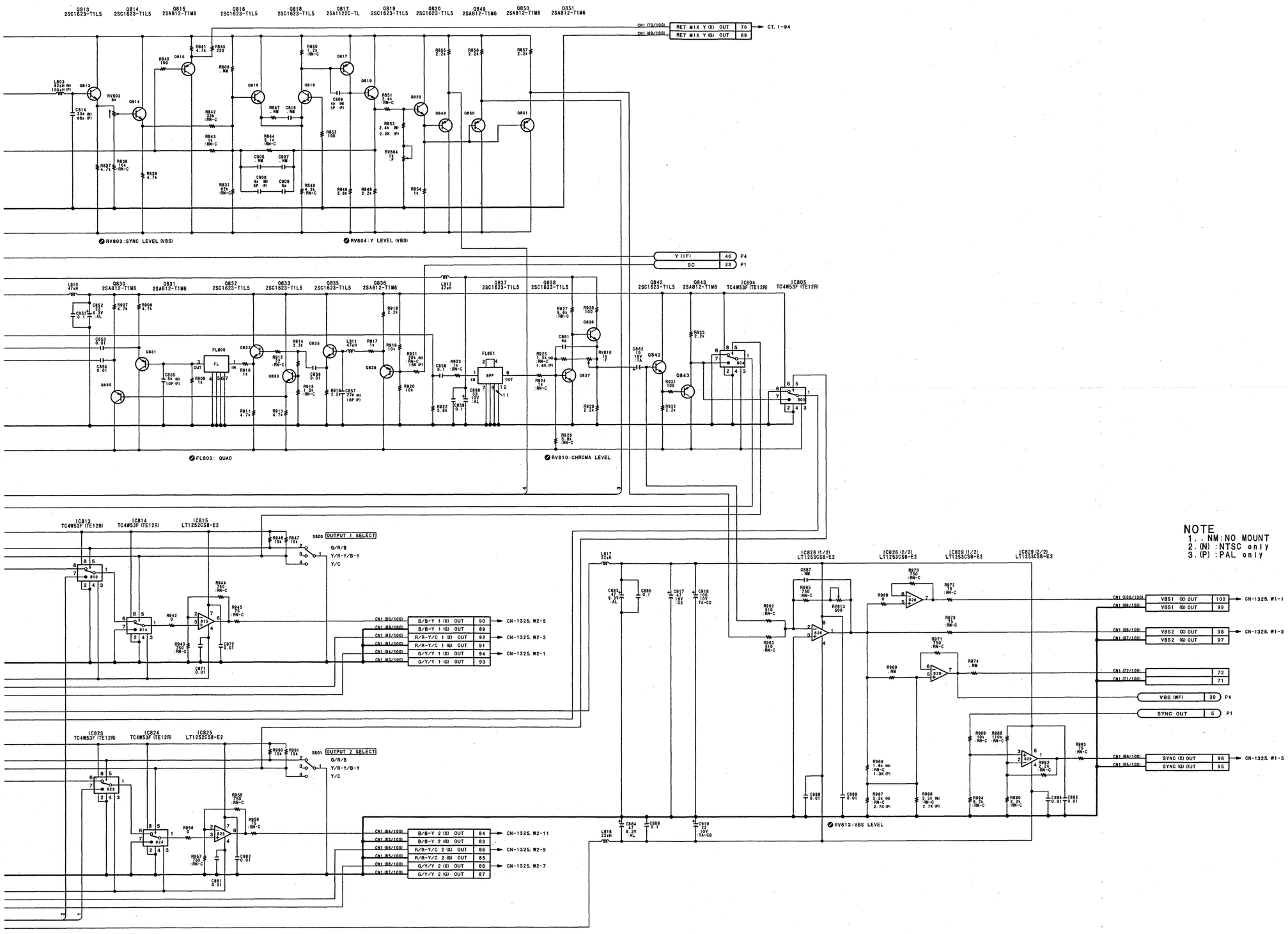

NOTE
1. , NM:NO MOUNT
2. (N) :NTSC only
3. (P) :PAL only

ES-20 (3/4)
DUS-100
B-CCUTX7-ES20/M

CCU-TX7/V2

I J K L M N O P

ES-20 (4/4)

CCU-TX7 (J) : S/N 30001-30035
CCU-TX7 (UC) : S/N 10001-10240
CCU-TX7 (CE) : S/N 40001-40185

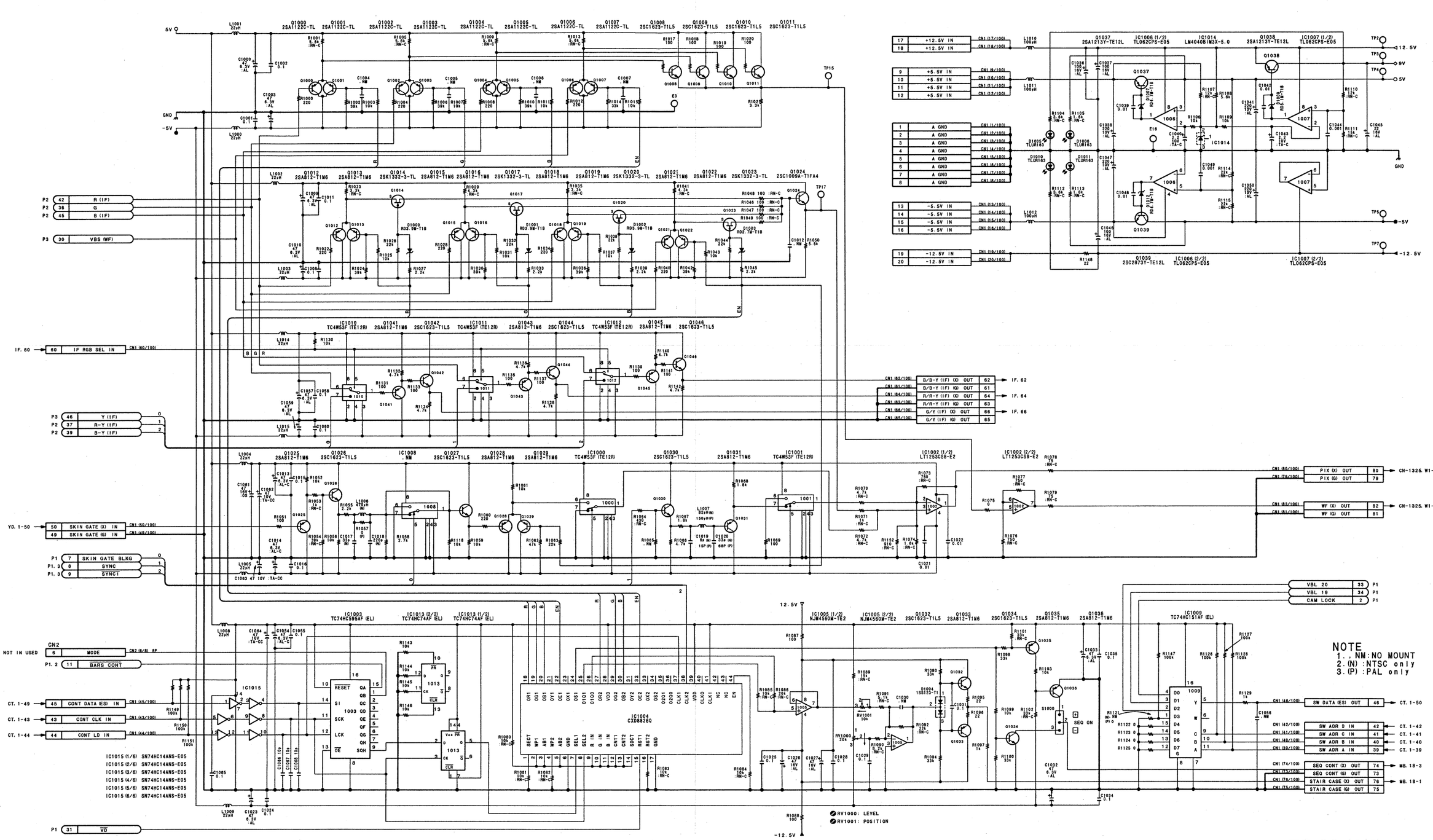

CCU-TX7 (J) : S/N 30011 and higher
CCU-TX7 (UC) : S/N 10056 and higher
CCU-TX7 (CE) : S/N 40046 and higher

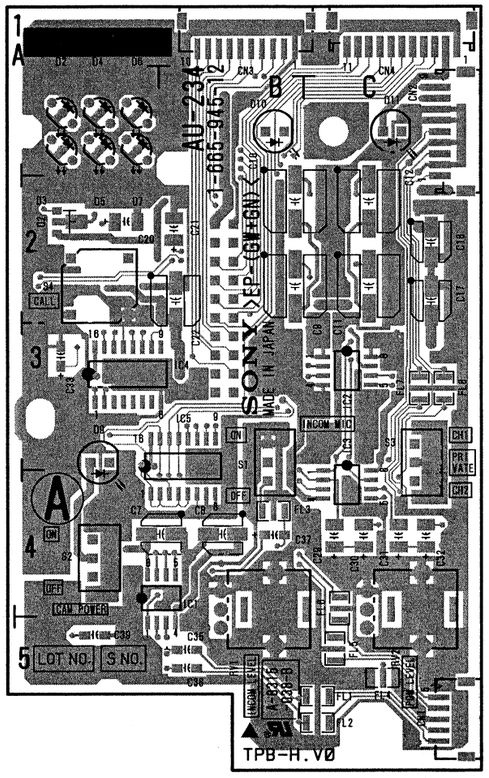

AU-234 -A SIDE-
SUFFIX: -12

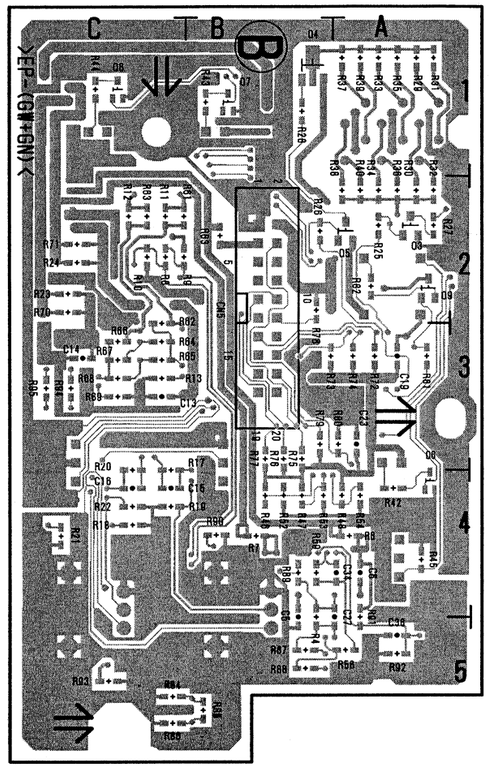

AU-234 -B SIDE-
SUFFIX: -12

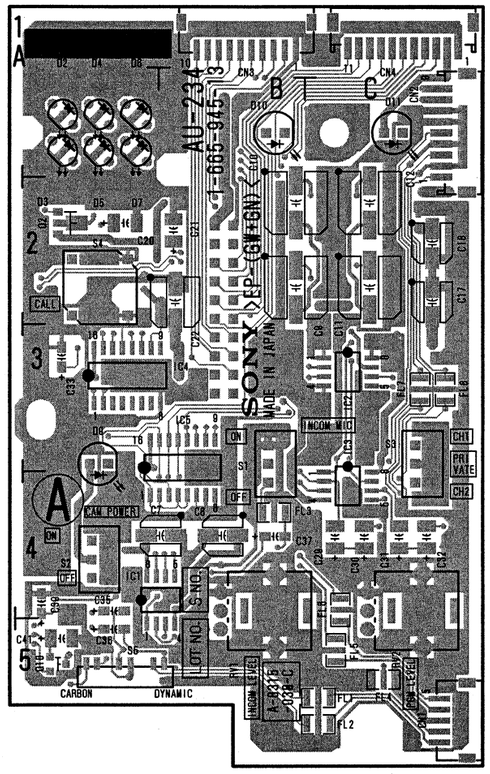

AU-234 -A SIDE-
SUFFIX: -13

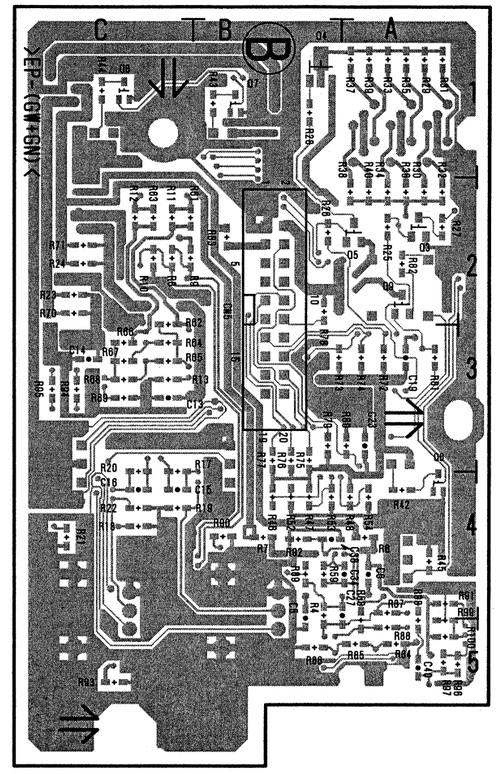

AU-234 -B SIDE-
SUFFIX: -13

CCU-TX7 (J) : S/N 30011 and higher
CCU-TX7 (UC) : S/N 10056 and higher
CCU-TX7 (CE) : S/N 40046 and higher

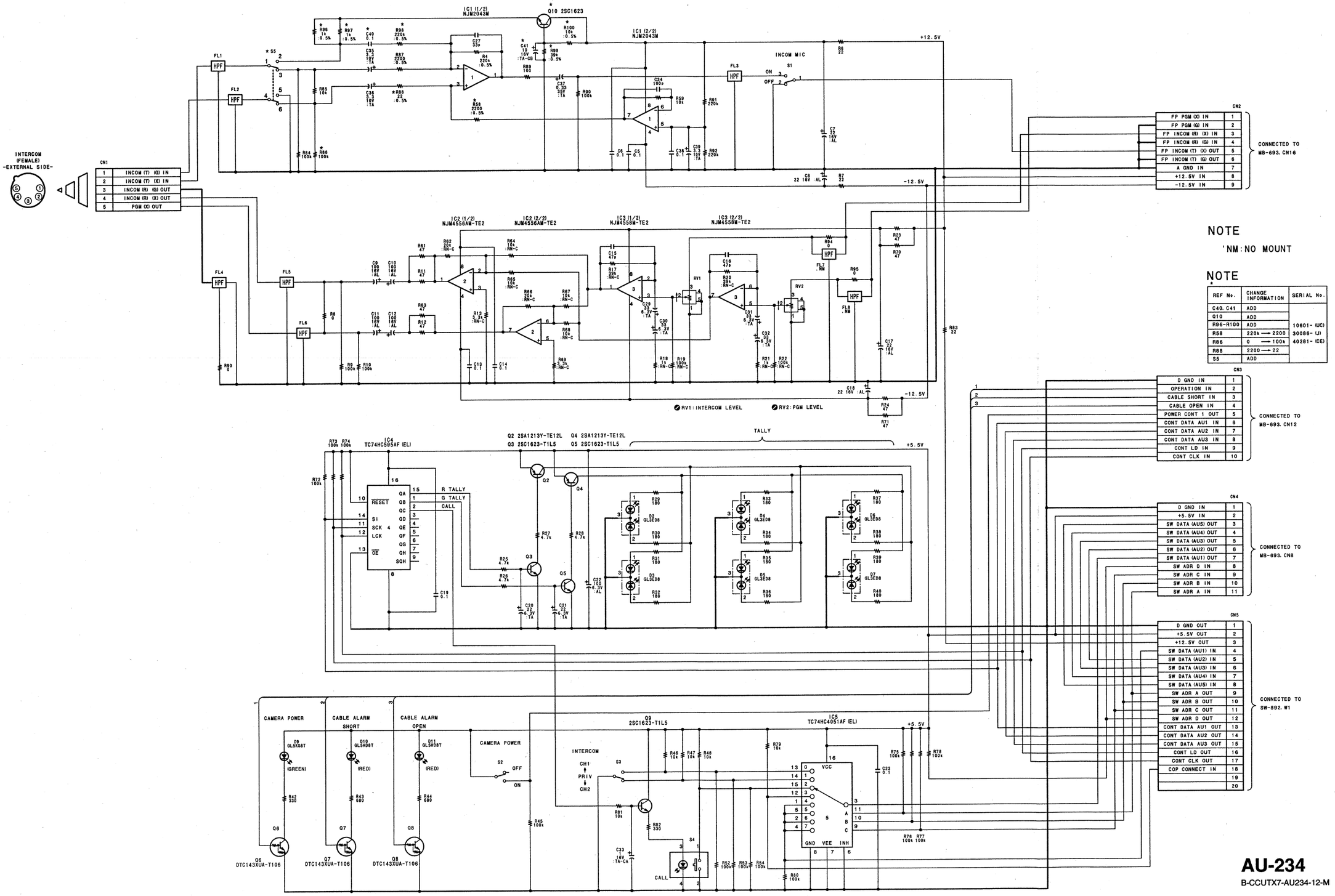

NOTE

'NM : NO MOUNT

NOTE

REF No.	CHANGE INFORMATION	SERIAL No.
C40. C41	ADD	10601- (UC) 30086- (J) 40281- (CE)
Q10	ADD	
R96-R100	ADD	
R58	220k ⟶ 2200	
R86	0 ⟶ 100k	
R88	2200 ⟶ 22	
S5	ADD	

AU-234

B-CCUTX7-AU234-12-M

CCU-TX7/V2

8-33 (a) 8-33 (a)

A B C D E F G H

CCU-TX7 (J) : S/N 30001-30010
CCU-TX7 (UC) : S/N 10001-10055
CCU-TX7 (CE) : S/N 40001-40045

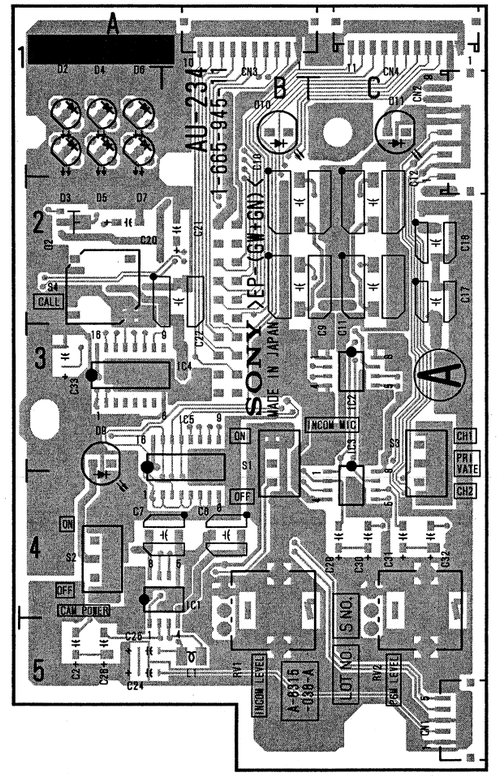

CCU-TX7 (J) : S/N 30001-30010
CCU-TX7 (UC) : S/N 10001-10055
CCU-TX7 (CE) : S/N 40001-40045

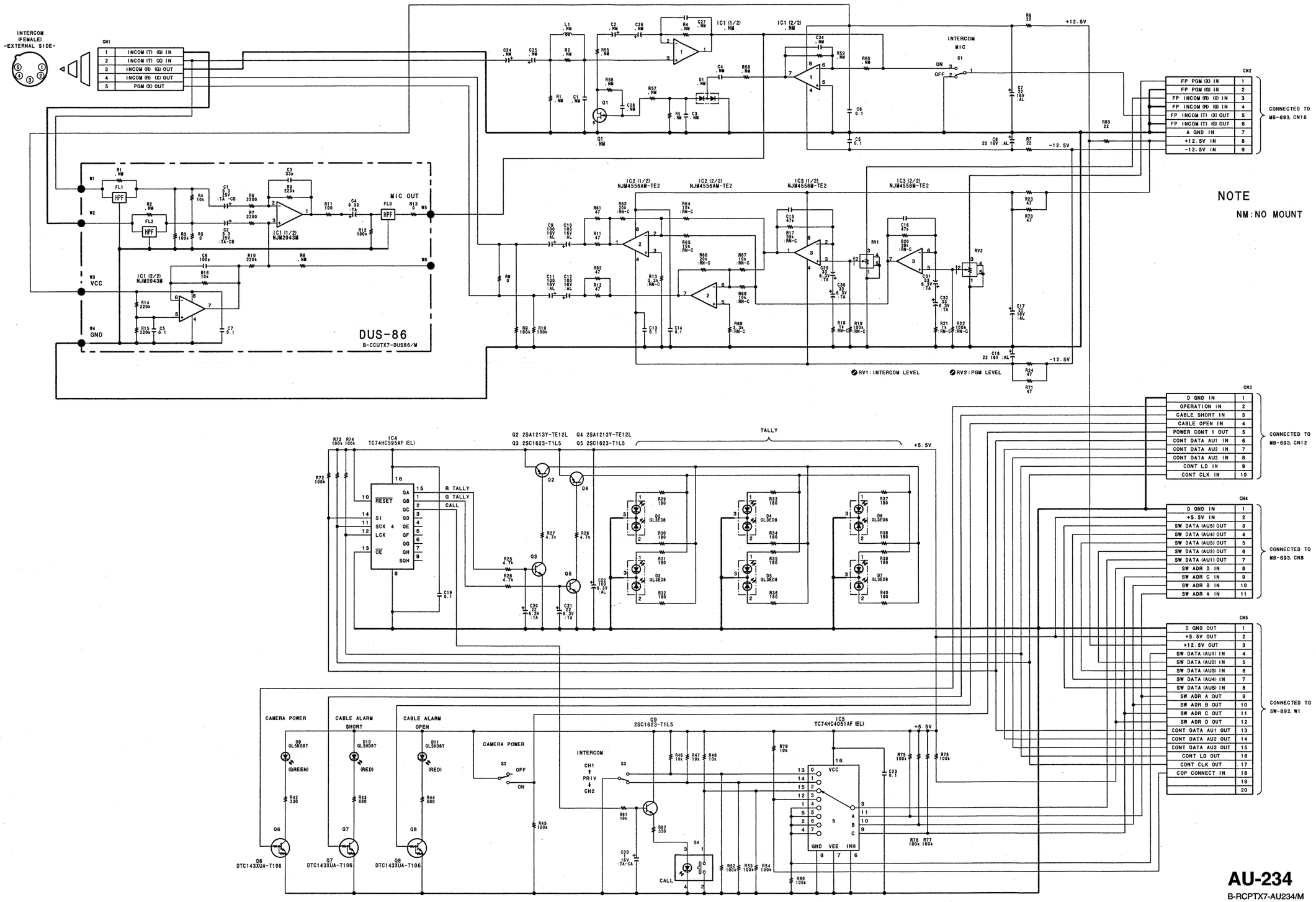

CCU-TX7 (J) : S/N 30001-31000
CCU-TX7 (UC) : S/N 10001-11000
CCU-TX7 (CE) : S/N 40001-41000

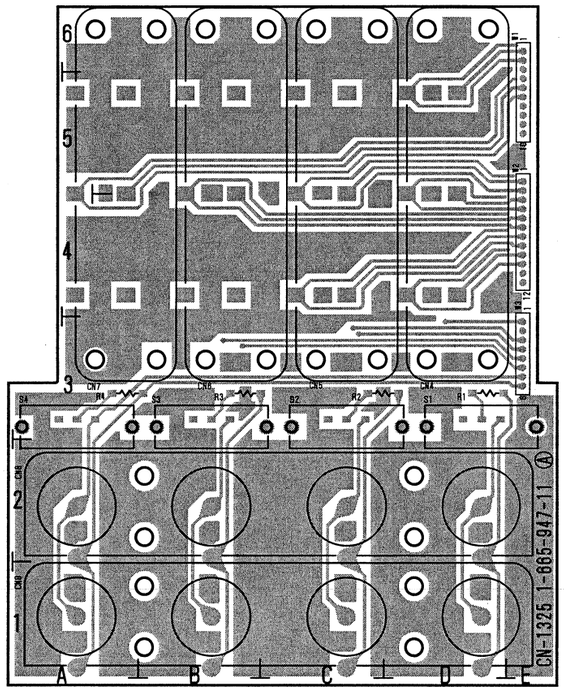

CN-1325 -A SIDE-
SUFFIX: -11

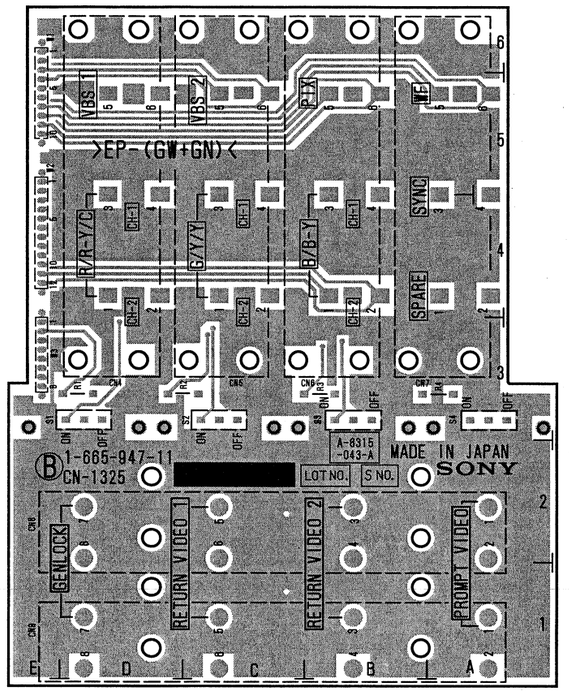

CN-1325 -B SIDE-
SUFFIX: -11

CCU-TX7 (J) : S/N 31001 and higher
CCU-TX7 (UC) : S/N 11001 and higher
CCU-TX7 (CE) : S/N 41001 and higher

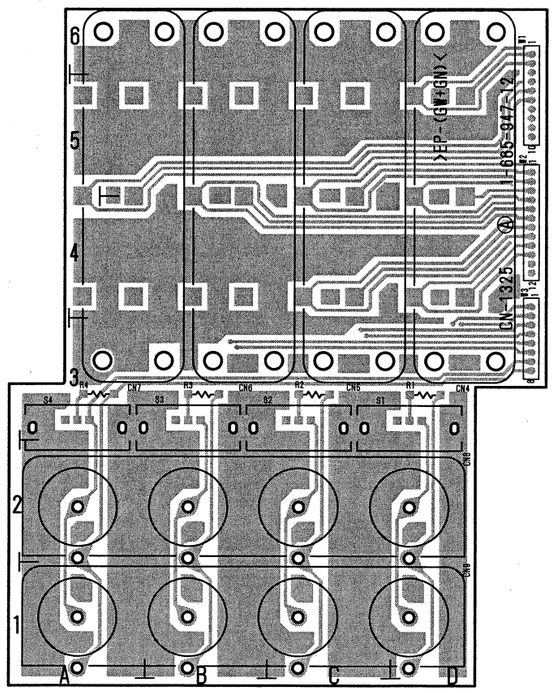

CN-1325 -A SIDE-
SUFFIX: -12

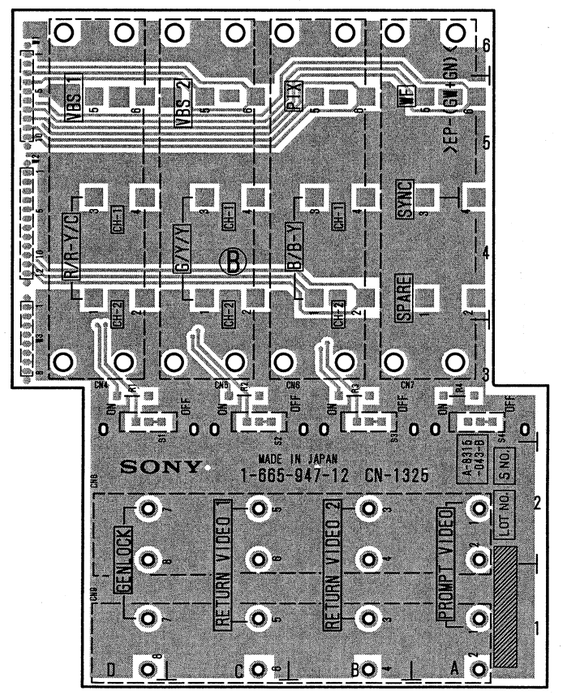

CN-1325 -B SIDE-
SUFFIX: -12

CN-1327, CN-1328, CN-1350, CN-1351, IO-140

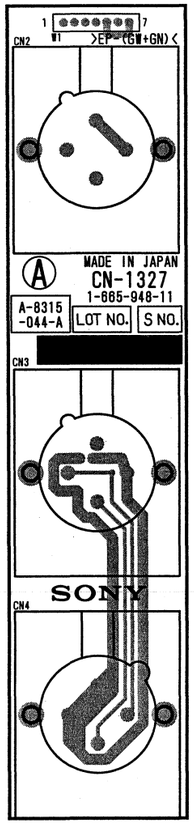

CN-1327 -A SIDE-
SUFFIX: -11

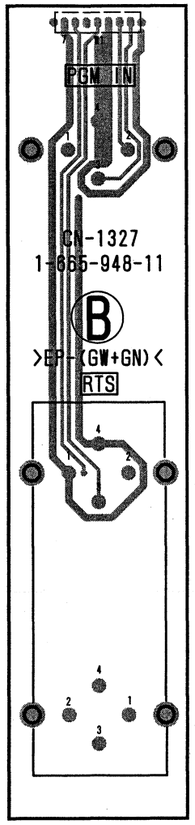

CN-1327 -B SIDE-
SUFFIX: -11

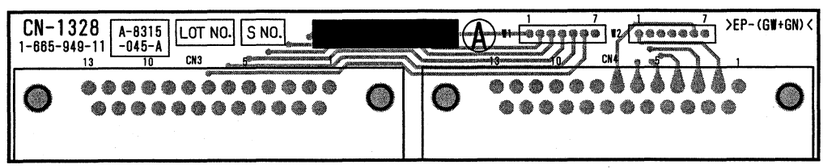

CN-1328 -A SIDE-
SUFFIX: -11

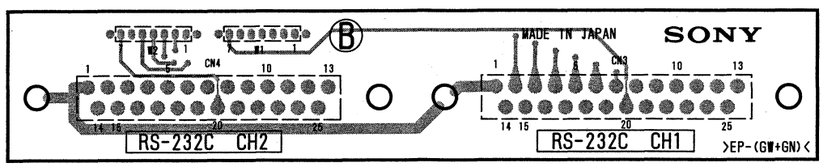

CN-1328 -B SIDE-
SUFFIX: -11

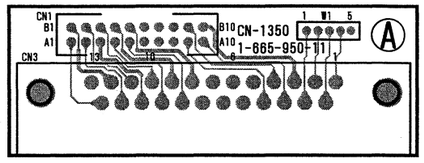

CN-1350 -A SIDE-
SUFFIX: -11

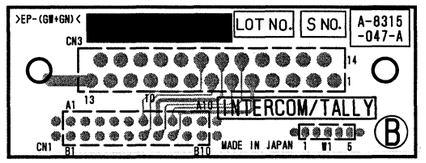

CN-1350 -B SIDE-
SUFFIX: -11

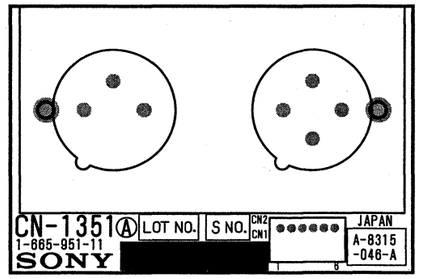

CN-1351 -A SIDE-
SUFFIX: -11

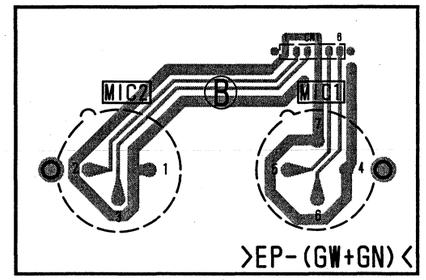

CN-1351 -B SIDE-
SUFFIX: -11

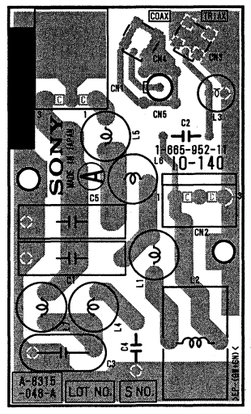

IO-140 -A SIDE-
SUFFIX: -11

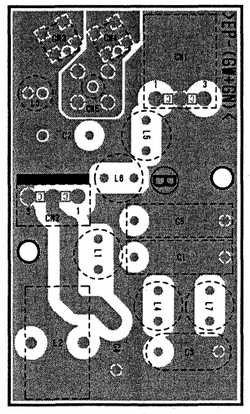

IO-140 -B SIDE-
SUFFIX: -11

CCU-TX7 (J) : S/N 30001-31000
CCU-TX7 (UC) : S/N 10001-11000
CCU-TX7 (CE) : S/N 40001-41000

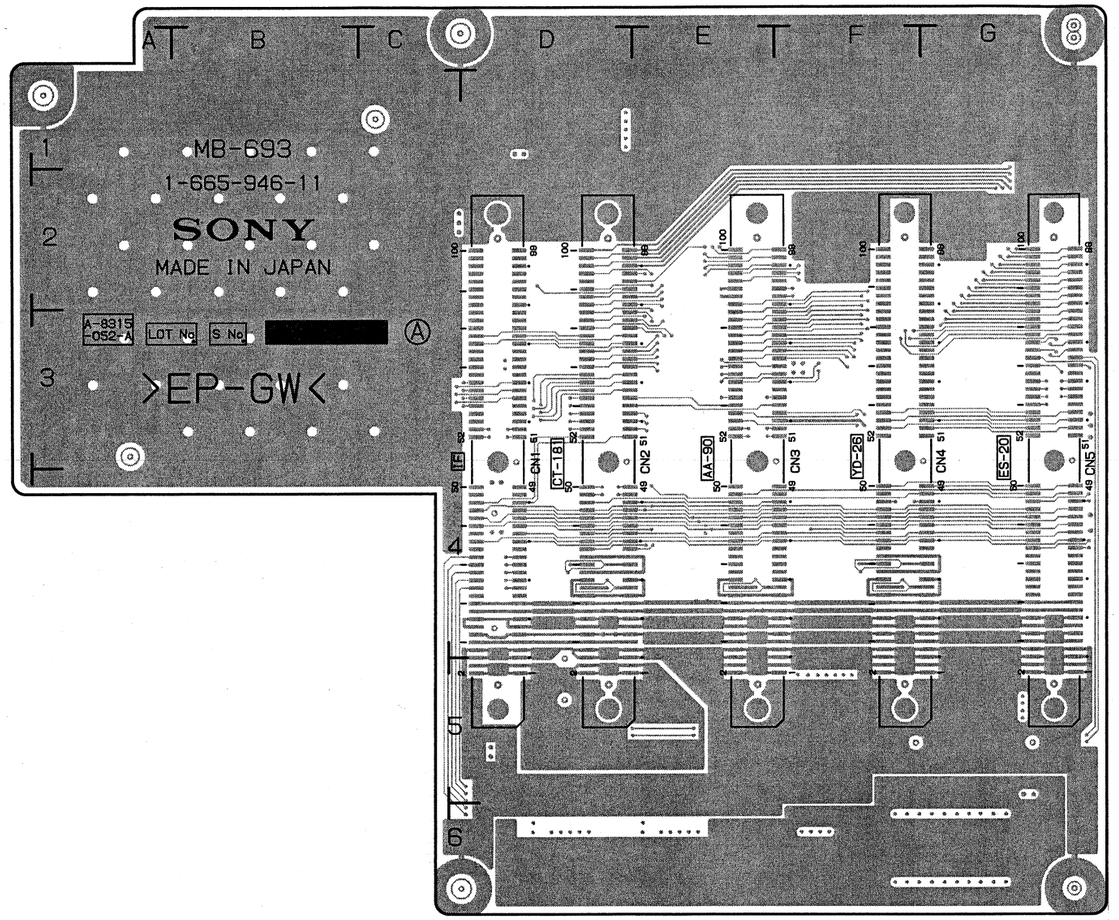

MB-693 -A SIDE-
SUFFIX: -11

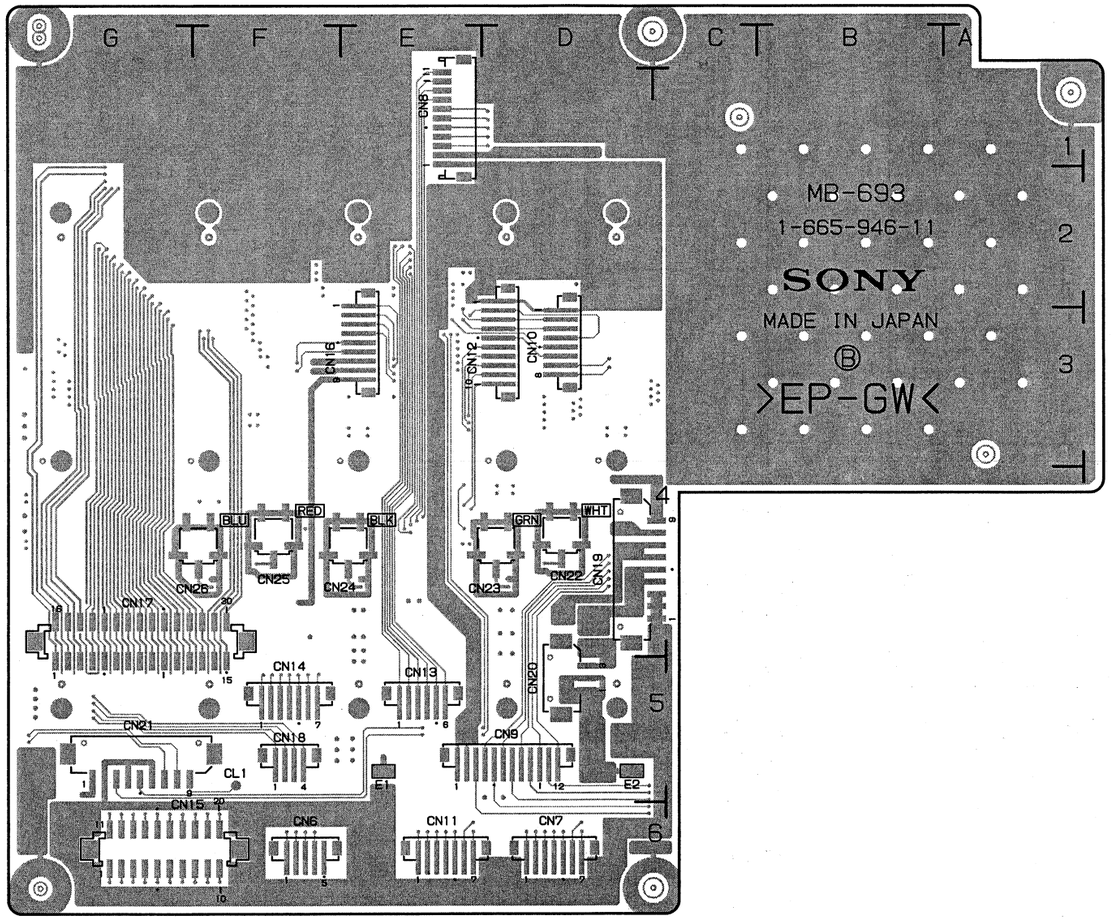

MB-693 -B SIDE-
SUFFIX: -11

CCU-TX7 (J) : S/N 31001 and higher
CCU-TX7 (UC) : S/N 11001 and higher
CCU-TX7 (CE) : S/N 41001 and higher

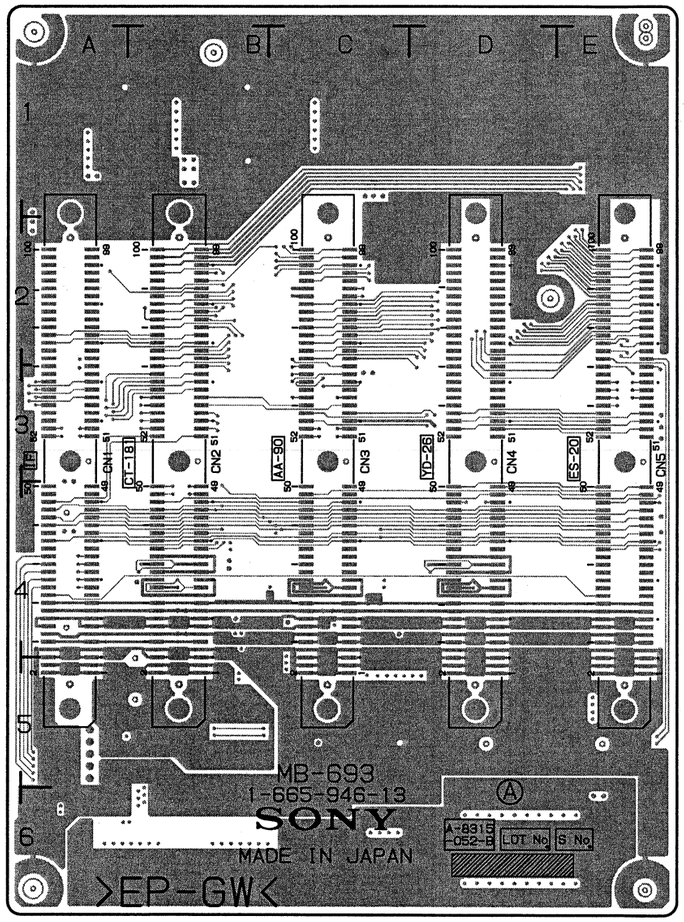

MB-693 -A SIDE-
SUFFIX: -13

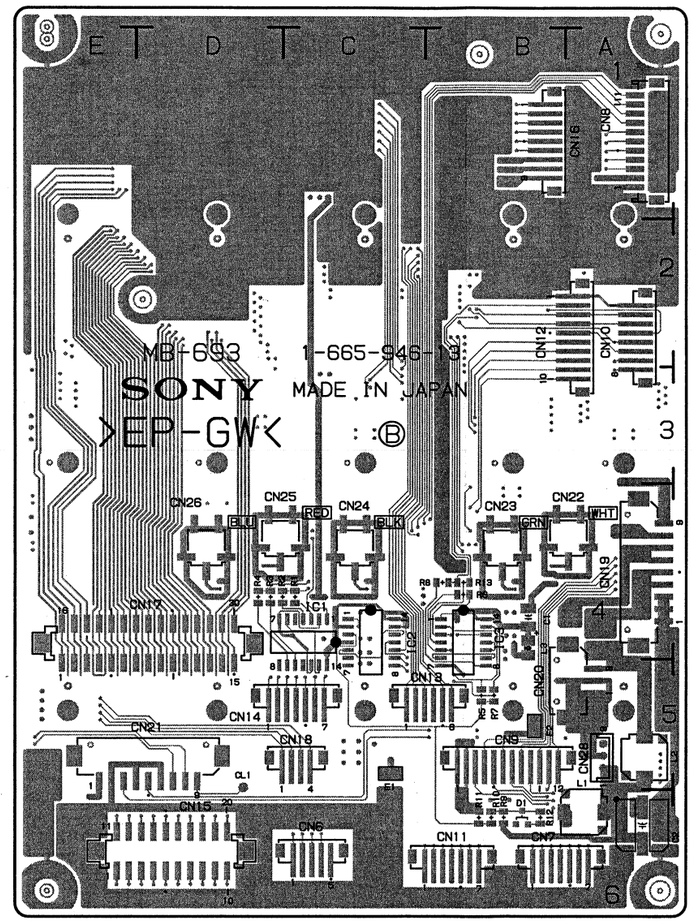

MB-693 -B SIDE-
SUFFIX: -13

CCU-TX7 (J) : S/N 31001 and higher
CCU-TX7 (UC) : S/N 11001 and higher
CCU-TX7 (CE) : S/N 41001 and higher

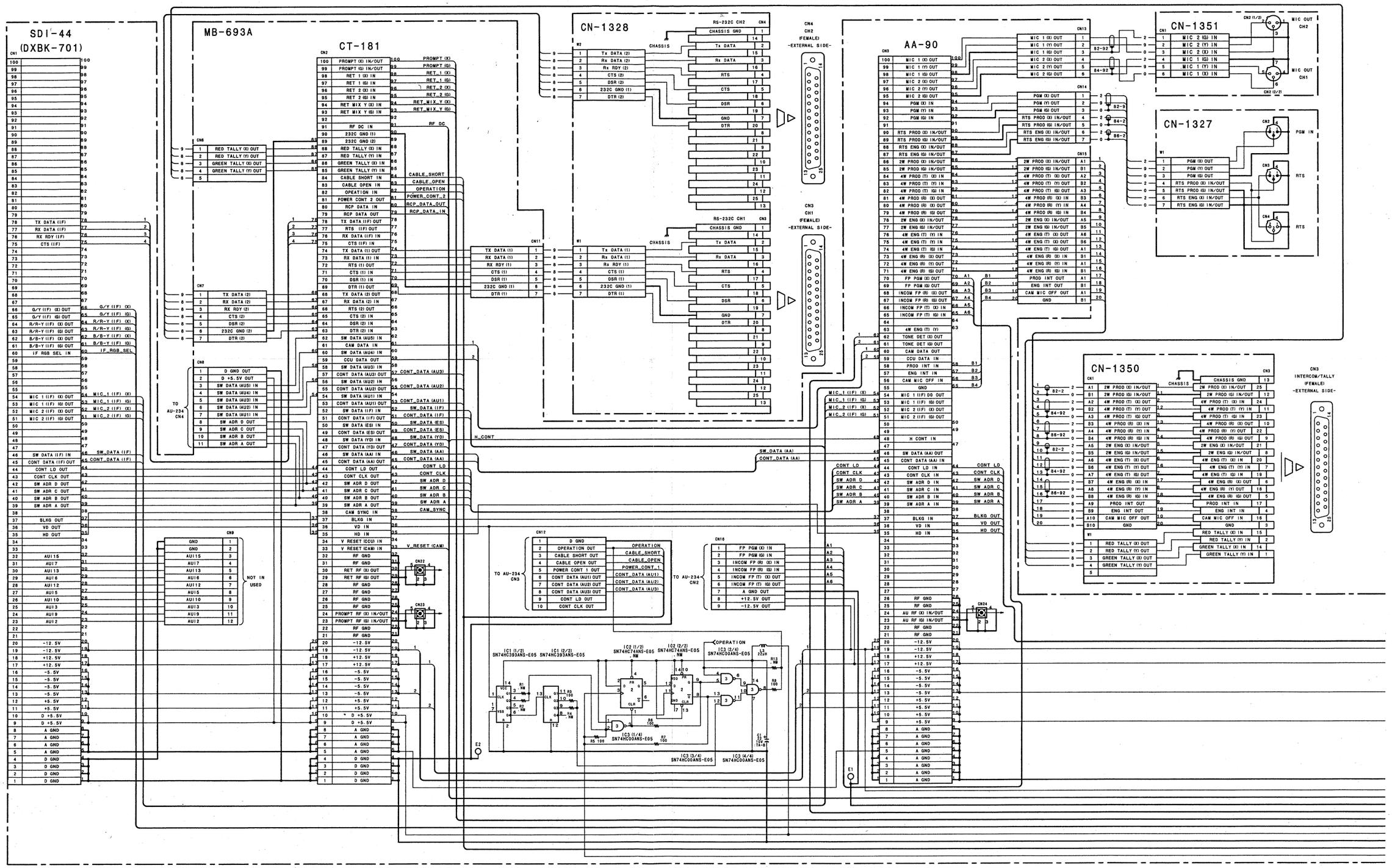

FRAME, MB-693A, IO-140, CN-1325A, CN-1327, CN-1328, CN-1350, CN-1351

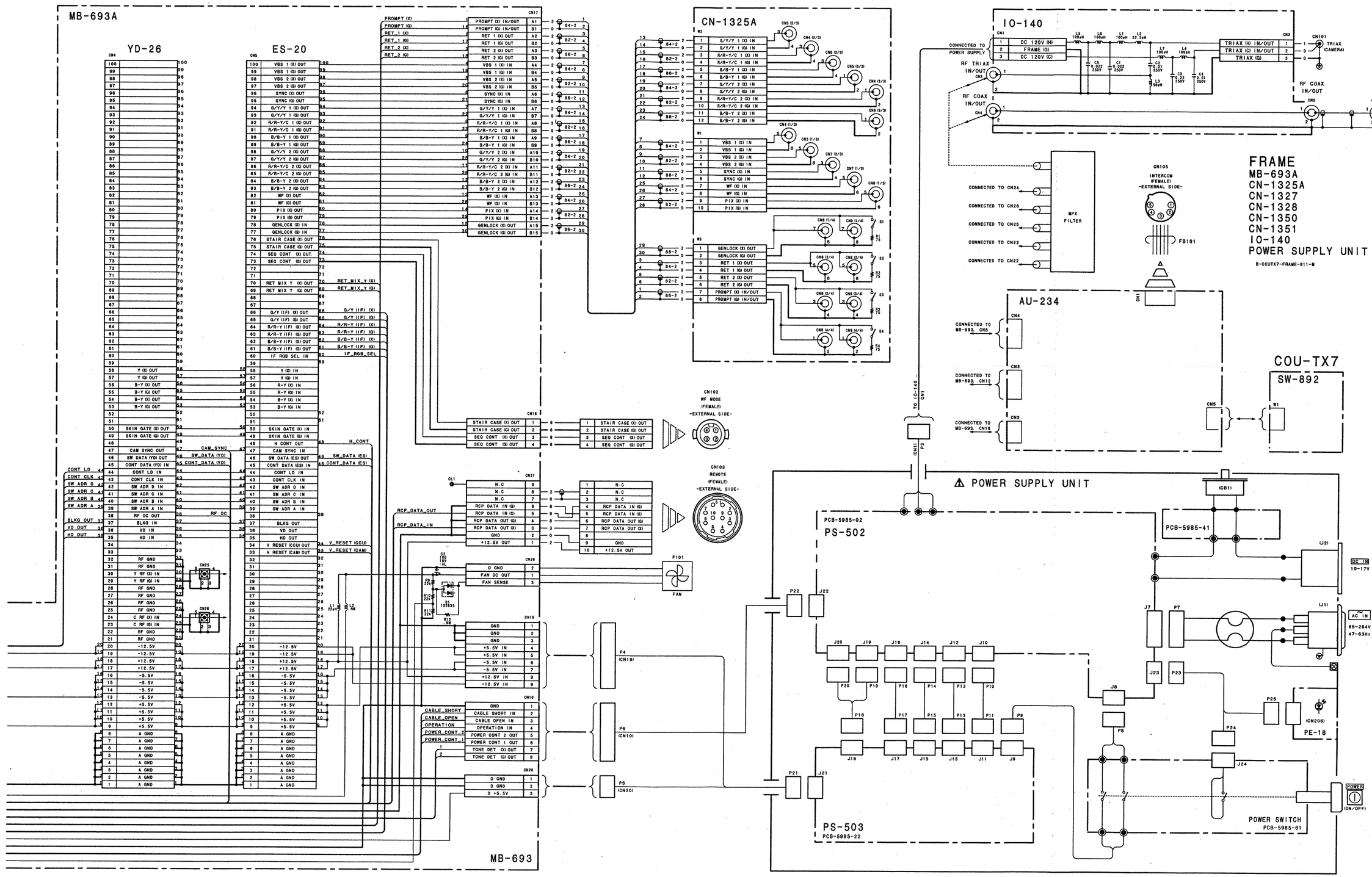

CCU-TX7/V2

8-39 (a)

8-39 (a)

I | J | K | L | M | N | O | P

CCU-TX7 (J) : S/N 30001-31000
CCU-TX7 (UC) : S/N 10001-11000
CCU-TX7 (CE) : S/N 40001-41000

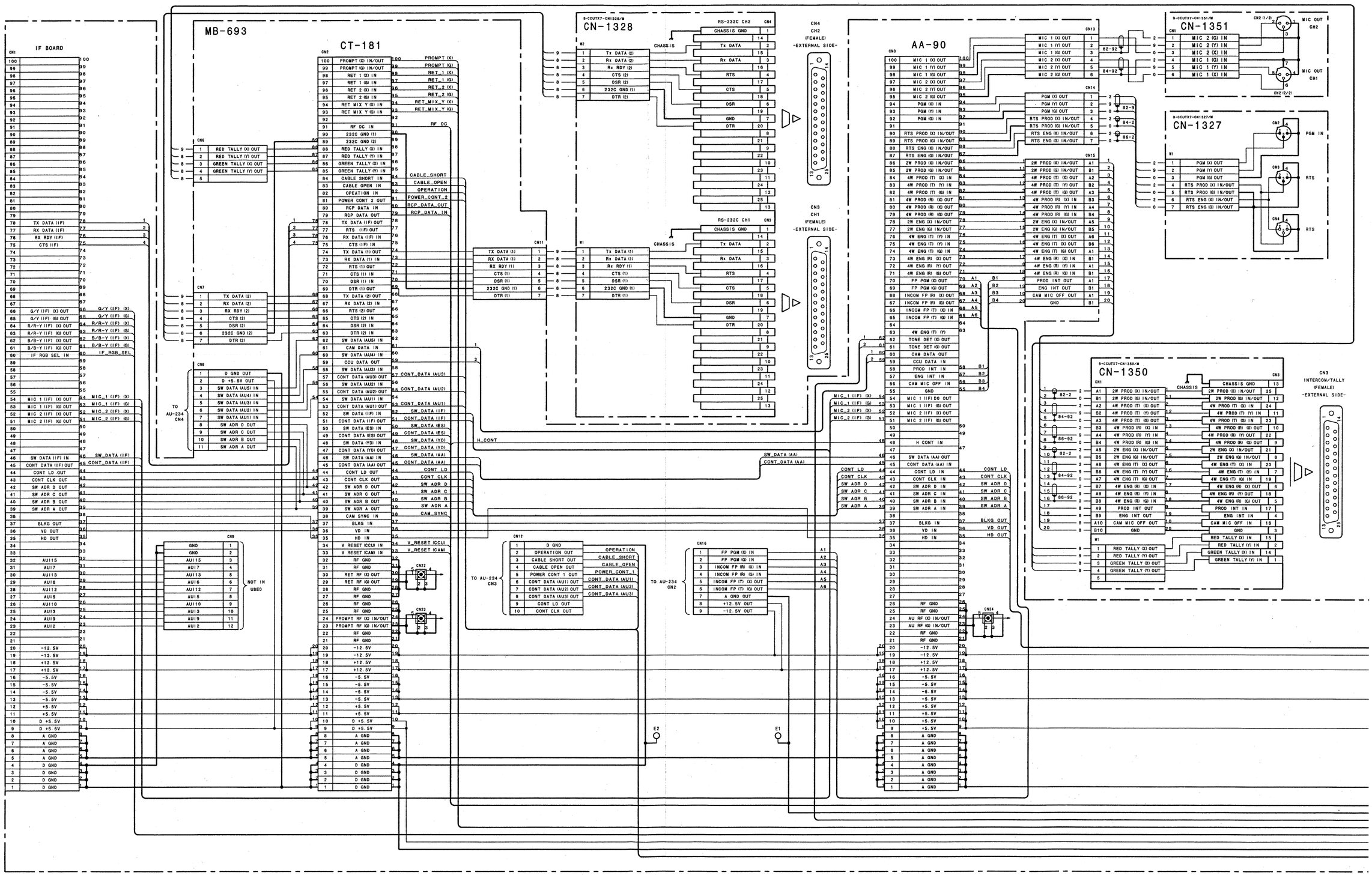

FRAME, MB-693, IO-140, CN-1325, CN-1327, CN-1328, CN-1350, CN-1351

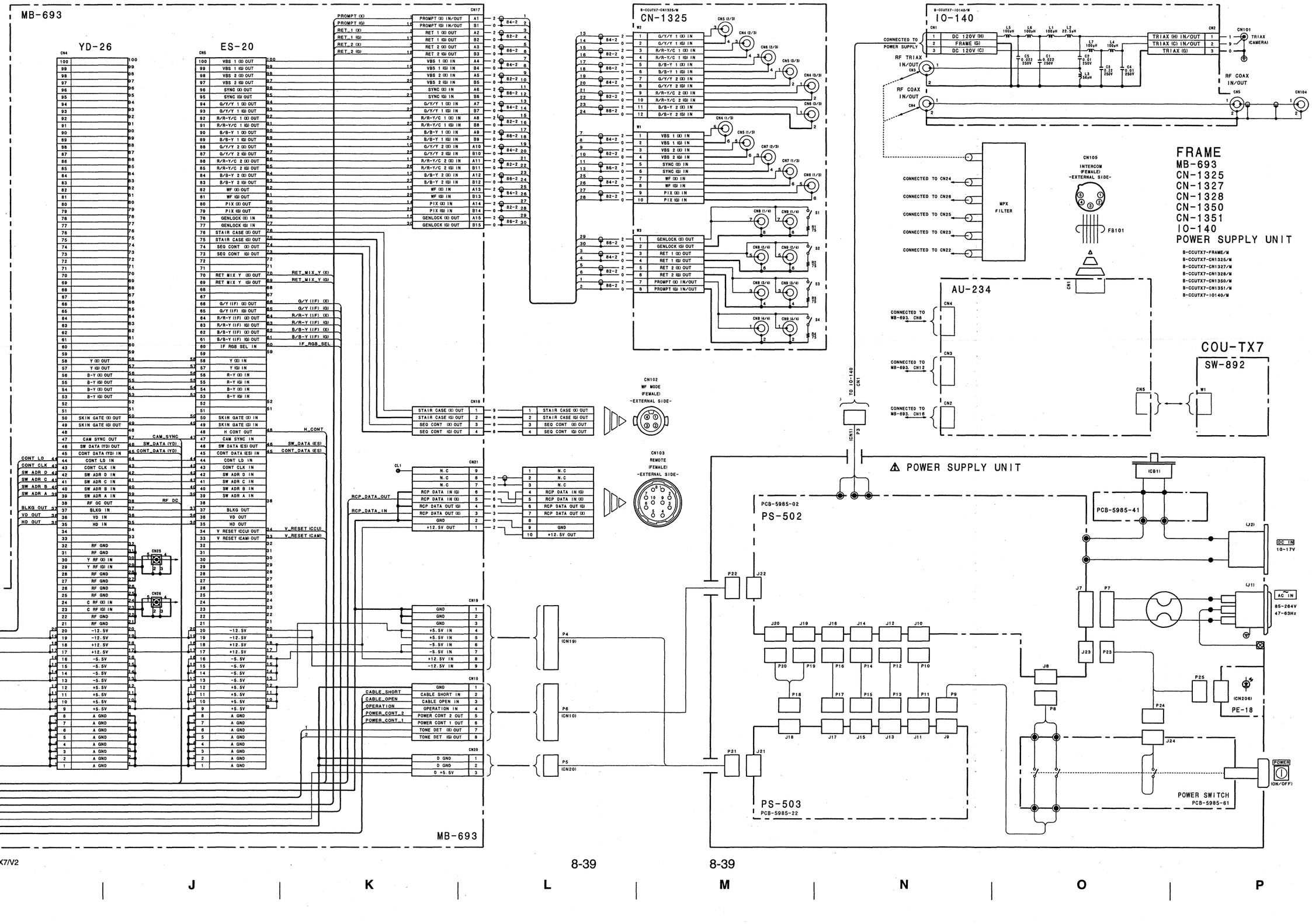

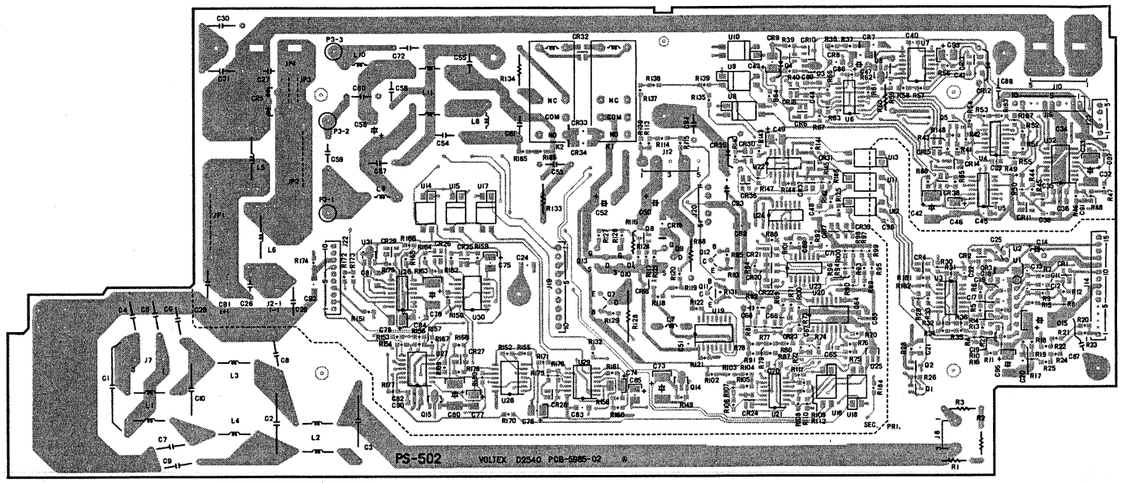

PS-502 -A SIDE-

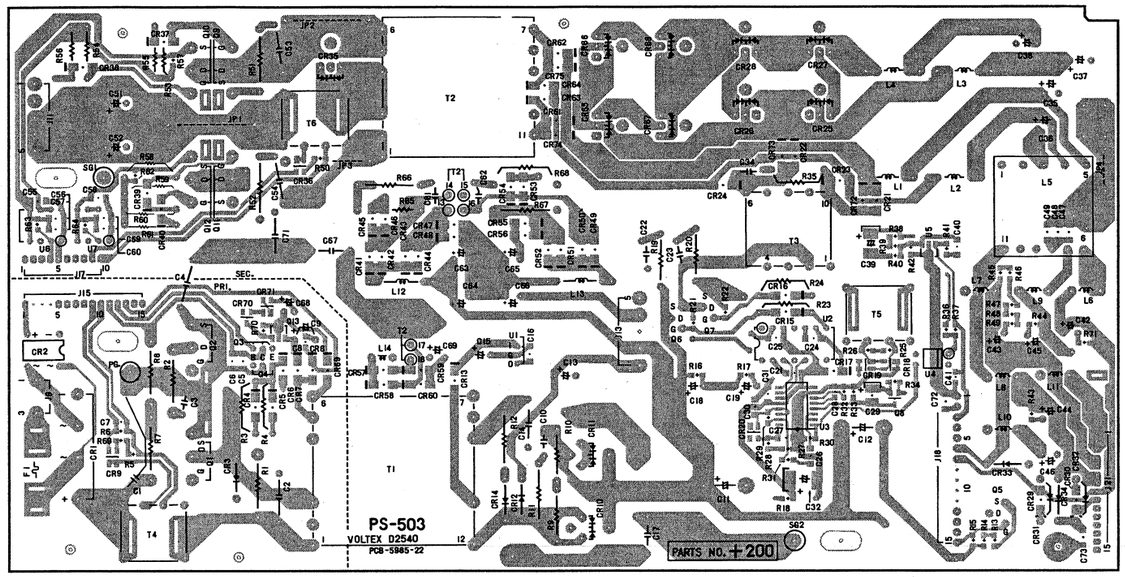

PS-503 -A SIDE-

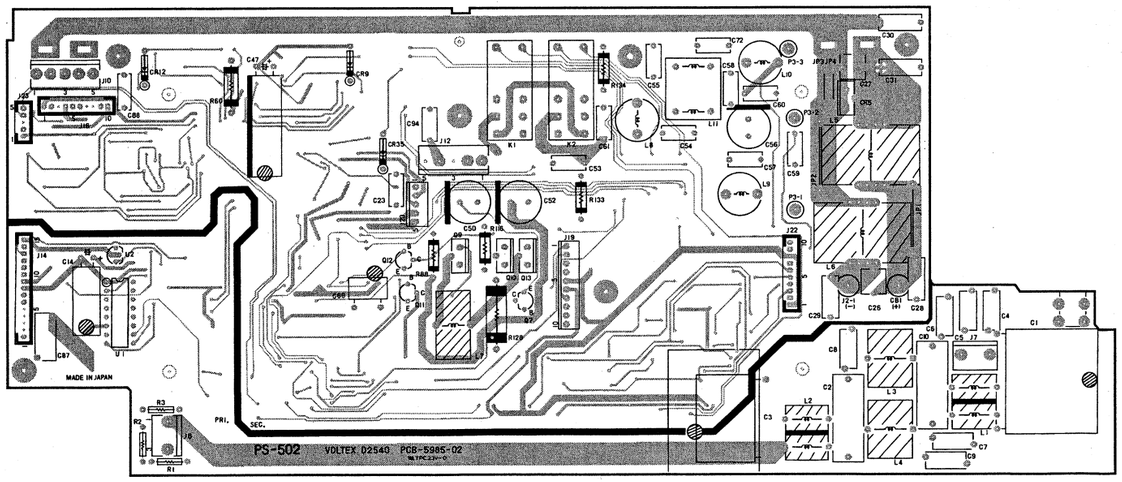

PS-502 -B SIDE-

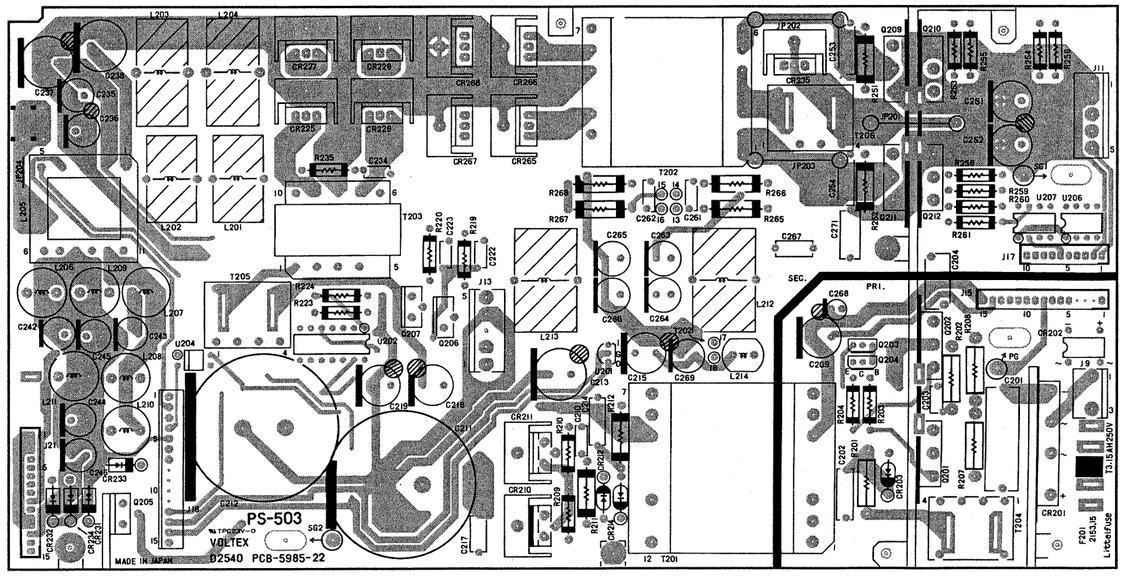

PS-503 -B SIDE-

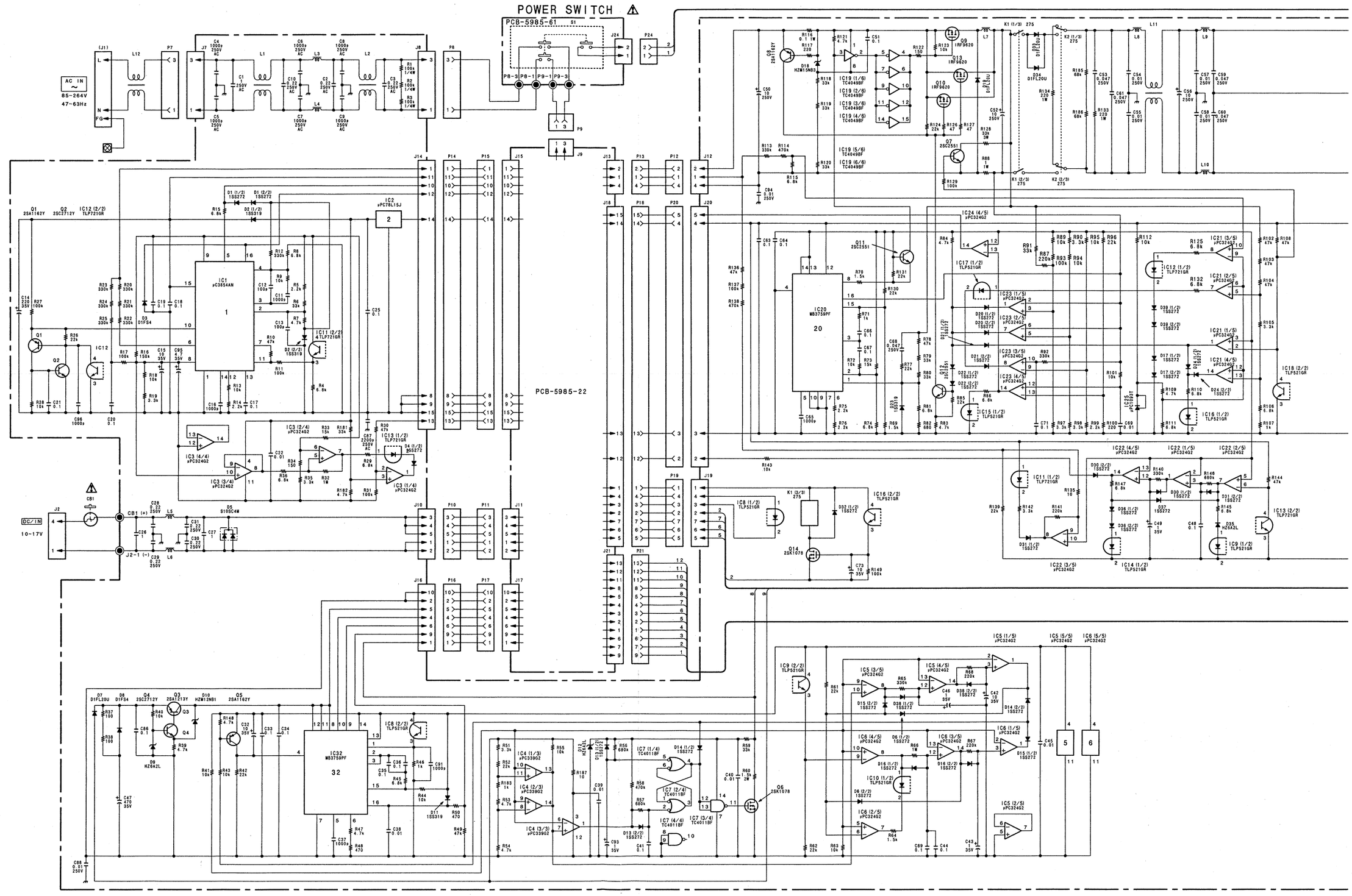
POWER SWITCH
PCB-5985-61
AC IN
85-264V
47-63Hz
PCB-5985-22
DC IN
10-17V
IC1 μPC3854AN
IC2 μPC78L15J
IC12 (2/2) TLP721GR
IC32 MB3759PF
IC20 MB3759PF
IC24 (4/5) μPC324G2
IC17 (1/2) TLP521GR
IC23 (1/5) μPC324G2
IC23 (2/5) μPC324G2
IC23 (3/5) μPC324G2
IC23 (4/5) μPC324G2
IC15 (1/2) TLP521GR
IC12 (1/2) TLP721GR
IC21 (2/5) μPC324G2
IC21 (1/5) μPC324G2
IC21 (4/5) μPC324G2
IC18 (2/2) TLP521GR
IC16 (1/2) TLP521GR
IC3 (2/4) μPC324G2
IC3 (4/4) μPC324G2
IC3 (3/4) μPC324G2
IC13 (1/2) TLP721GR
IC3 (1/4) μPC324G2
IC8 (2/2) TLP521GR
IC8 (1/2) TLP521GR
IC16 (2/2) TLP521GR
IC4 (1/3) μPC339G2
IC4 (2/3) μPC339G2
IC4 (3/3) μPC339G2
IC7 (1/4) TC4011BF
IC7 (2/4) TC4011BF
IC7 (4/4) TC4011BF
IC7 (3/4) TC4011BF
IC19 (1/6) TC4049BF
IC19 (2/6) TC4049BF
IC19 (3/6) TC4049BF
IC19 (4/6) TC4049BF
IC19 (5/6) TC4049BF
IC19 (6/6) TC4049BF
IC5 (1/5) μPC324G2
IC5 (2/5) μPC324G2
IC5 (3/5) μPC324G2
IC5 (4/5) μPC324G2
IC5 (5/5) μPC324G2
IC6 (1/5) μPC324G2
IC6 (2/5) μPC324G2
IC6 (3/5) μPC324G2
IC6 (4/5) μPC324G2
IC6 (5/5) μPC324G2
IC22 (1/5) μPC324G2
IC22 (2/5) μPC324G2
IC22 (3/5) μPC324G2
IC22 (4/5) μPC324G2
IC11 (1/2) TLP721GR
IC14 (1/2) TLP521GR
IC10 (1/2) TLP521GR
IC9 (1/2) TLP521GR
IC25 μPC1093T
Q1 2SA1162Y
Q2 2SC2712Y
Q3 2SA1213Y
Q4 2SC2712Y
Q5 2SA1162Y
Q6 2SK1078
Q7 2SC2551
Q8 2SA1162Y
Q9 IRF9620
Q10 IRF9620
Q11 2SC2551
Q12 2SA1213Y
Q13 IRF9620
Q14 2SK1078
D1 (1/2) 1SS272
D1 (2/2) 1SS272
D2 (1/2) 1SS272
D2 (2/2) 1SS319
D3 D1FS4
D4 (1/2) 1SS272
D4 (2/2) 1SS272
D5 S10SC4W
D6 (1/2) 1SS272
D6 (2/2) 1SS272
D7 D1FL20U
D8 D1FS4
D9 HZ6A2L
D10 HZM12NB1
D11 1SS319
D12 HZ6A2L
D13 HZ6A2L
D14 (1/2) 1SS272
D14 (2/2) 1SS272
D15 (1/2) 1SS272
D15 (2/2) 1SS272
D16 (1/2) 1SS272
D16 (2/2) 1SS272
D17 (1/2) 1SS272
D17 (2/2) 1SS272
D18 HZM15NB3
D19 D1FL20U
D20 (1/2) 1SS272
D20 (2/2) 1SS272
D21 (1/2) 1SS272
D21 (2/2) 1SS272
D22 (1/2) 1SS272
D22 (2/2) 1SS272
D23 (1/2) 1SS272
D23 (2/2) 1SS272
D24 (1/2) 1SS272
D24 (2/2) 1SS272
D30 (1/2) 1SS272
D30 (2/2) 1SS272
D31 (1/2) 1SS272
D31 (2/2) 1SS272
D32 (1/2) 1SS272
D33 1SS319
D34 D1FL20U
D35 HZ6A2L
D36 (1/2) 1SS272
D36 (2/2) 1SS272
D37 1SS272
D38 (1/2) 1SS272
D38 (2/2) 1SS272
D39 (1/2) 1SS272
D39 (2/2) 1SS272
K1 (1/3) 275
K1 (2/3) 275
K1 (3/3) 275
K2 (1/3) 275
K2 (2/3) 275
CB1
L1
L2
L3
L4
L5
L6
L7
L8
L9
L10
L11
L12
P7
P8
P9
P10
P11
P12
P13
P14
P15
P16
P17
P18
P19
P20
P21
J1
J2
J7
J8
J9
J10
J11
J12
J13
J14
J15
J16
J17
J18
J19
J20
J21
J24

POWER SUPPLY (1/2)

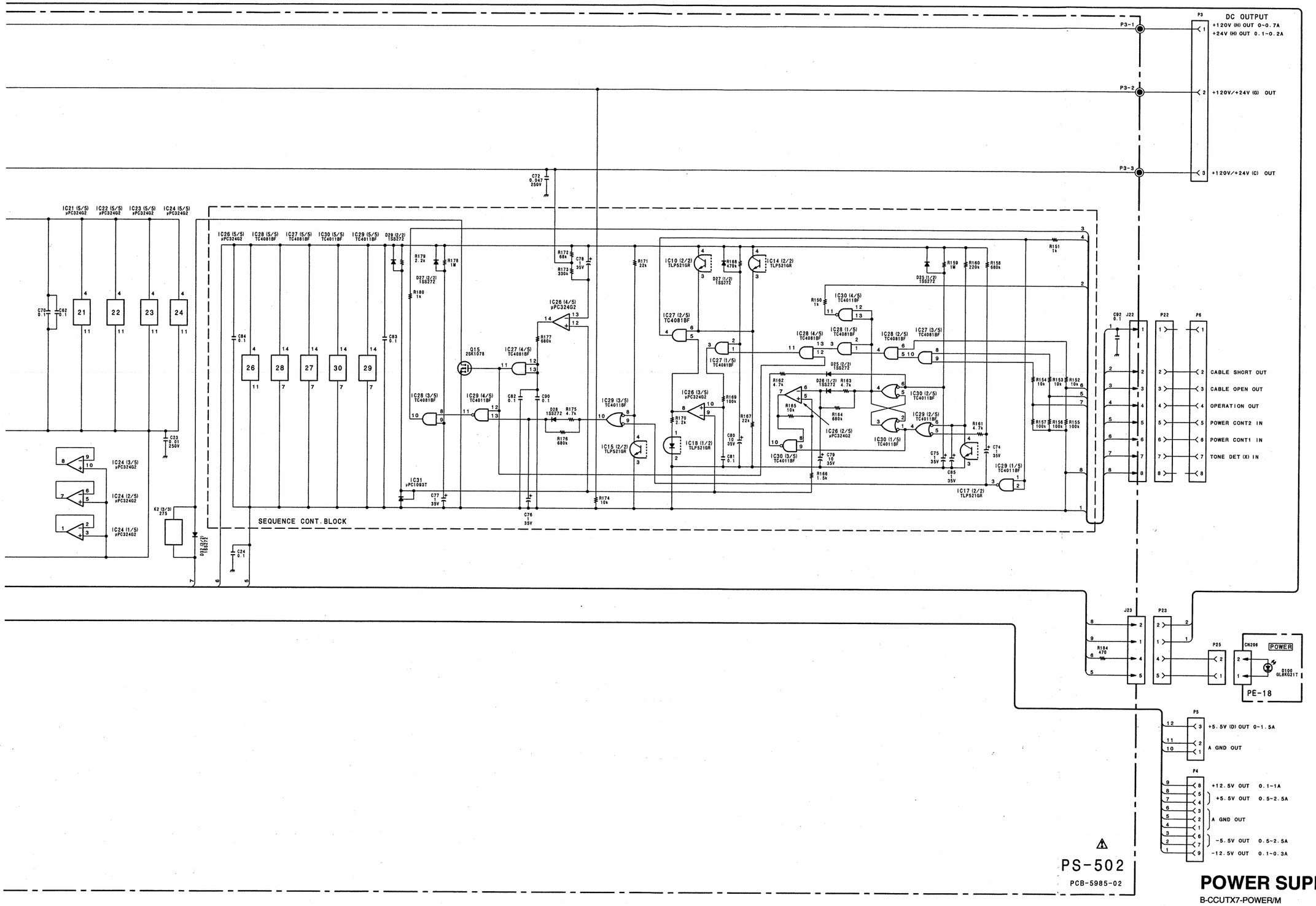

POWER SUPPLY (1/2)
B-CCUTX7-POWER/M

POWER SUPPLY (2/2)

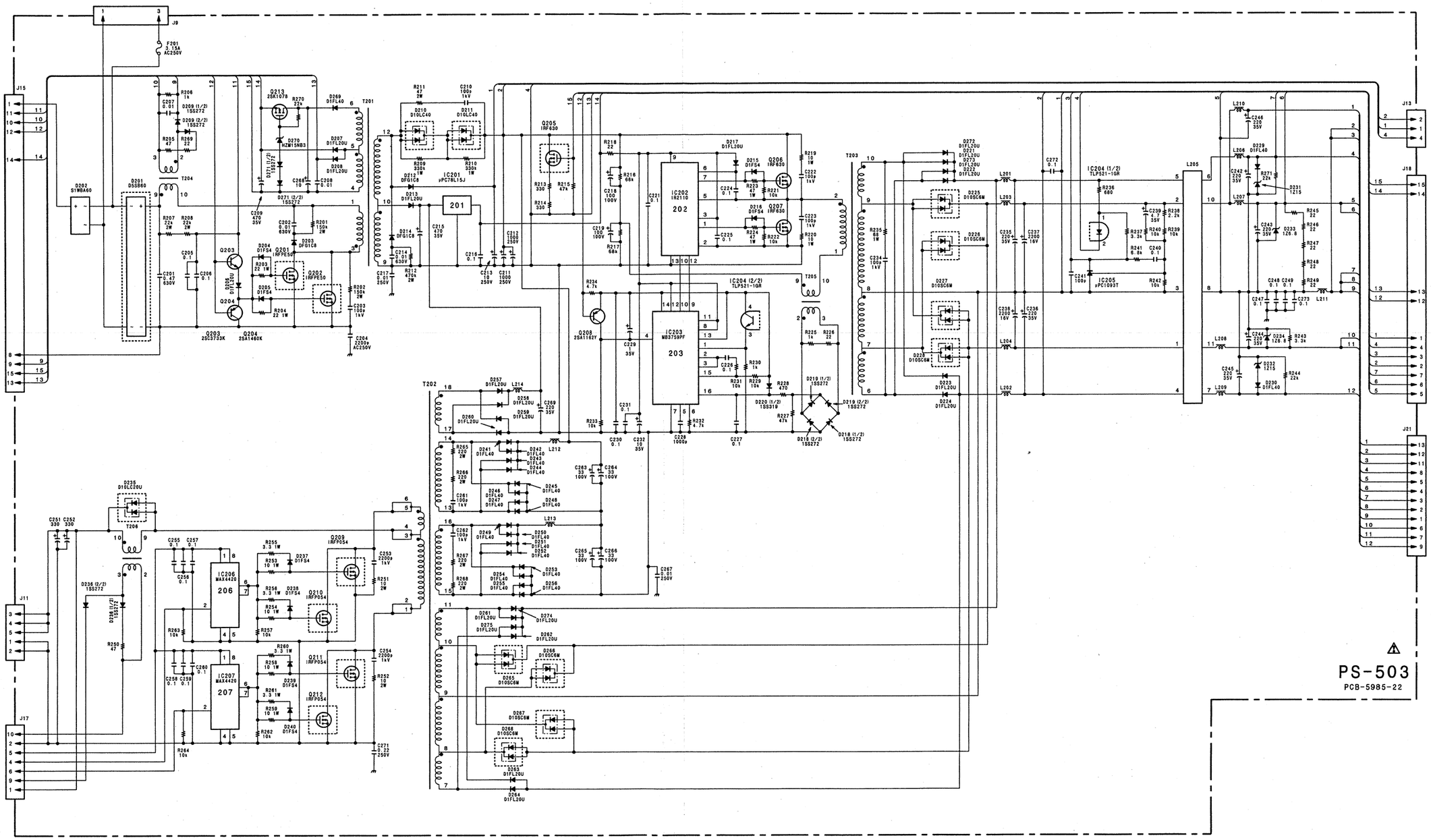

POWER SUPPLY (2/2)

B-CCUTX7-POWER/M

8-44

CCU-TX7/V2

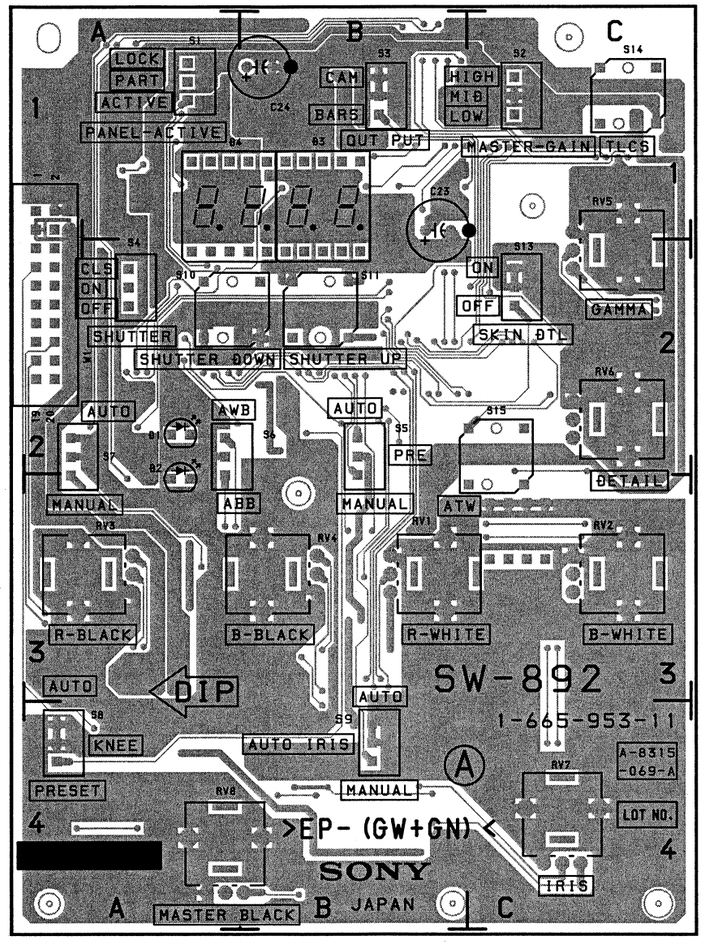

SW-892 -A SIDE-
SUFFIX: -11

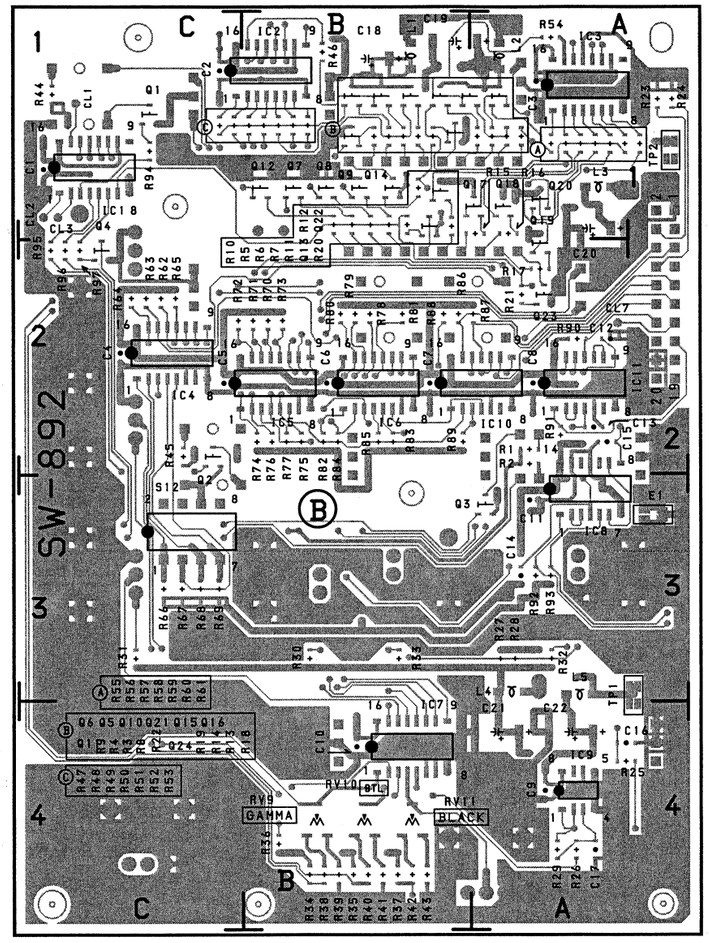

SW-892 -B SIDE-
SUFFIX: -11

*: B SIDE

*D201	A3	S204	A2	S231	D3
*D202	A3	S205	A2	S232	D2
*D203	A2	S206	A1	S233	D2
*D204	A1	S207	A1	S234	D2
*D205	A3	S208	A3	S235	D1
*D206	A3	S209	A3	S236	D1
*D207	A2	S210	A2		
*D208	A1	S211	A2	*W201	C2
*D209	A3	S212	A2	*W202	C2
*D210	A3	S213	A1		
*D211	A2	S214	A1		
*D212	A1	S215	A3		
*D213	C1	S216	A3		
*D214	D1	S217	A2		
*D215	A3	S218	A2		
*D216	A1	S219	A2		
*D217	D3	S220	A1		
*D218	D2	S221	A1		
*D219	D2	S222	C1		
*D220	D1	S223	C1		
		S224	C1		
S201	A3	S226	B3		
S202	A3	S227	B3		
S203	A2	S228	B1		
		S229	B1		
		S230	D3		

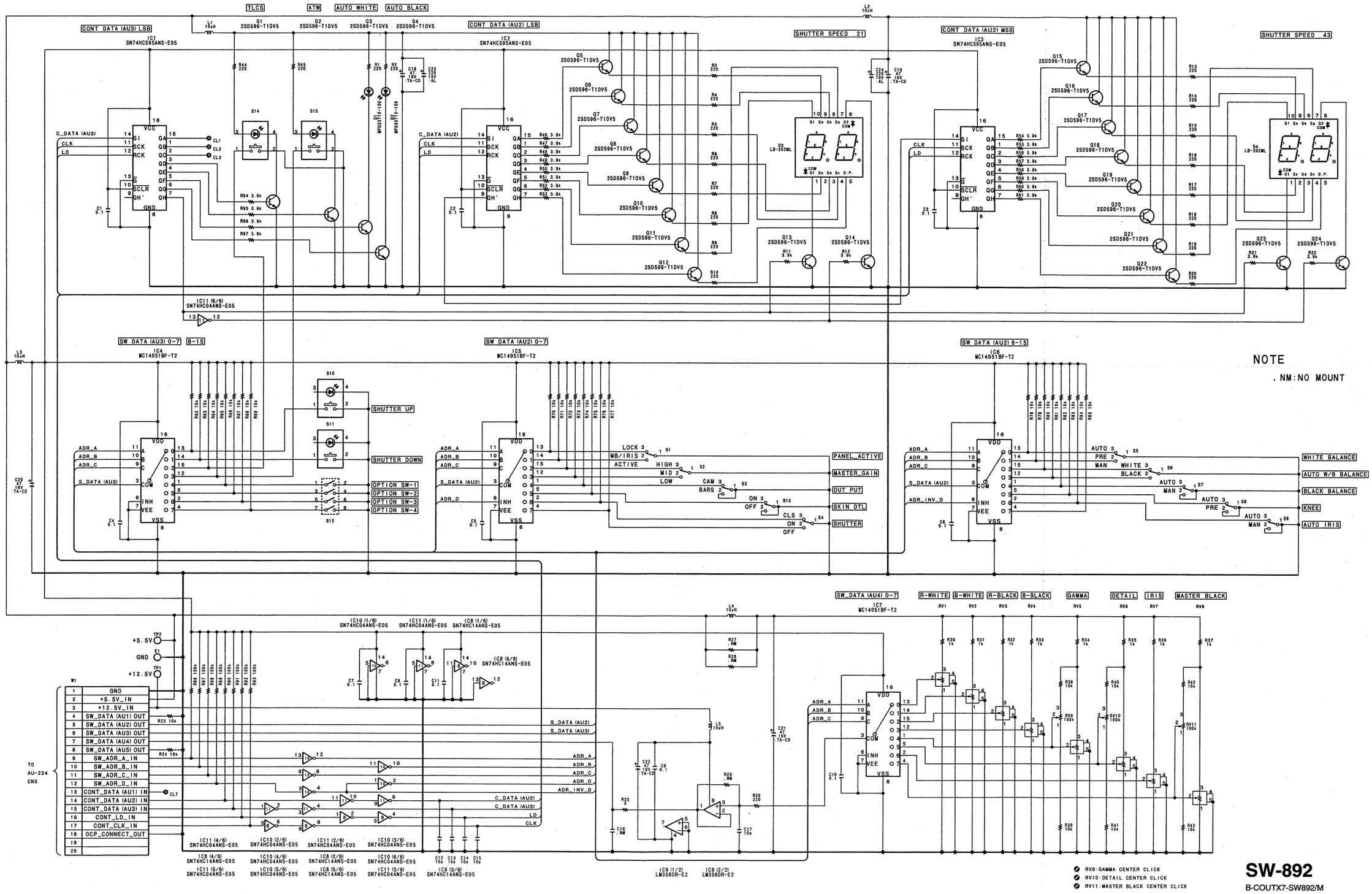

NOTE

, NM:NO MOUNT

SW-892

B-COUTX7-SW892/M

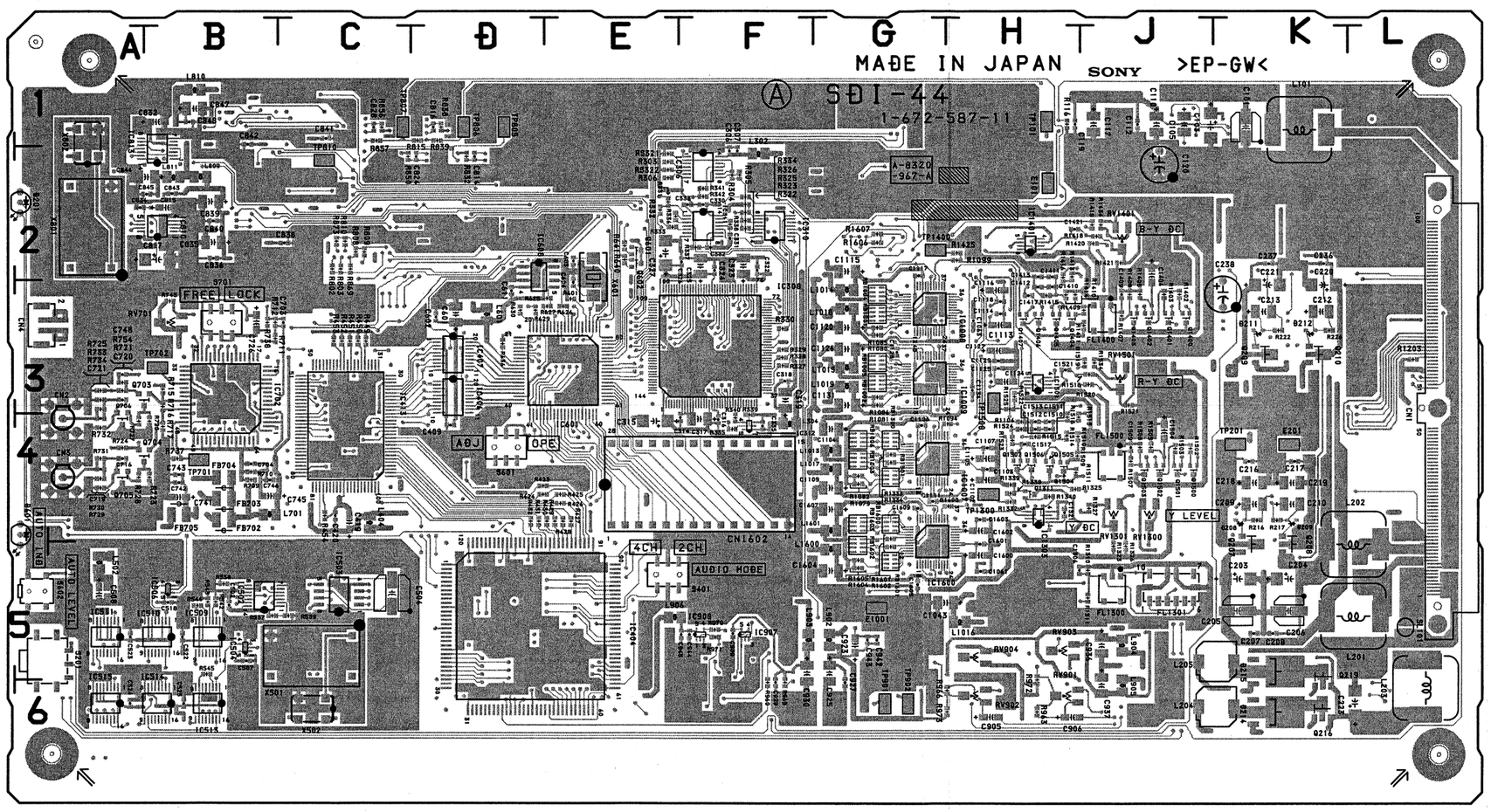

SDI-44 **-A SIDE-**
SUFFIX: -11

*: B SIDE

CN001	L3	IC703	*C4	L1600	G5	RV901	H6
CN002	A4	IC704	*C4	L1601	G4	RV902	H6
CN003	A4	IC706	*C3	L1602	*G2	RV903	H5
CN004	A3	IC807	*D1			RV904	H5
		IC810	B2	Q101	*J1	RV1300	J4
CNI602	E4	IC811	*C1	Q202	*K5	RV1301	J4
		IC813	B2	Q204	*K4	RV1401	J2
D101	*K1	IC814	*C1	Q205	*K5	RV1501	J3
D201	A2	IC815	*C2	Q206	*K5		
D202	*K4	IC816	*B2	Q207	K5	S201	A5
D203	*K4	IC817	*B2	Q208	K5	S401	E5
D204	*K5	IC818	*C2	Q209	K3	S601	D4
D206	*K5	IC819	*C2	Q210	K3	S602	A5
D208	K4	IC820	*D2	Q214	*K6	S701	B3
D209	K4	IC821	*C2	Q215	*K6		
D211	K3	IC822	*B1	Q216	K6	SL101	L5
D212	K3	IC823	*B1	Q219	K5		
D214	K6	IC824	*B2	Q220	*K5	TP101	H1
D215	K5	IC825	*B2	Q221	*K6	TP201	K4
D401	*D3	IC826	*C2	Q401	*D3	TP701	B4
D501	*B5	IC827	*D2	Q601	E2	TP702	B3
D601	A4	IC828	*D2	Q602	E2	TP805	D1
D802	*A2	IC901	*L3	Q703	A3	TP806	D1
D902	*H6	IC902	*H5	Q704	A4	TP807	C1
D903	*H6	IC903	*G5	Q705	A4	TP810	C2
D904	*G6	IC904	*G5	Q706	A4	TP901	G6
D905	*G6	IC905	*F5	Q1004	*H5	TP902	G6
		IC906	*F5	Q1005	*H4	TP1300	H4
E101	H2	IC907	F5	Q1006	*H3	TP1400	G2
E201	K4	IC908	F5	Q1007	*H3	TP1500	H3
E1001	G5	IC1007	G4	Q1008	*H3		
		IC1008	G3	Q1009	*H3	X501	C5
FB702	B4	IC1009	G3	Q1300	*J5	X502	C6
FB703	B4	IC1010	*H5	Q1311	H4	X601	E2
FB704	B4	IC1011	*H3	Q1400	J3	X801	A2
FB705	B4	IC1012	*H3	Q1401	J3	X802	A1
		IC1200	*G5	Q1402	J3		
FL1300	J5	IC1300	*J5	Q1403	J3		
FL1301	J5	IC1302	*H4	Q1404	H3		
FL1400	J3	IC1303	H4	Q1405	H3		
FL1500	J4	IC1400	*J2	Q1406	H3		
		IC1401	H2	Q1407	H3		
IC101	*K2	IC1500	*H3	Q1500	J4		
IC102	*H1	IC1501	H3	Q1501	J4		
IC201	*K3	IC1600	G4	Q1502	J4		
IC202	*K2	IC1601	*G2	Q1503	J4		
IC203	*L6	IC1602	*G2	Q1504	H4		
IC301	*G4			Q1505	H4		
IC302	*G4	L101	K1	Q1506	H4		
IC303	*G3	L103	*J1	Q1507	H4		
IC304	*G3	L201	L5				
IC305	*G3	L202	L5	RB301	*E3		
IC306	F2	L203	L6	RB302	*E3		
IC308	F3	L204	K6	RB303	*E3		
IC309	*E2	L205	K5	RB304	*E3		
IC310	F2	L301	*F2	RB305	*E4		
IC311	F2	L302	F2	RB401	*E3		
IC312	F4	L401	*E5	RB402	*E3		
IC401	*D6	L402	*D3	RB714	*B4		
IC403	*D5	L403	*C3	RB715	*B4		
IC404	D5	L404	C4	RB1001	G3		
IC405	*D5	L501	*C6	RB1002	G3		
IC406	D3	L502	A5	RB1003	G4		
IC407	D3	L503	*C6	RB1004	G3		
IC408	*D3	L601	D3	RB1005	G3		
IC409	*D3	L602	*G2	RB1006	G4		
IC410	*D3	L603	*E6	RB1300	G4		
IC411	*C3	L701	B4	RB1301	G4		
IC412	*C4	L806	*A1	RB1600	G4		
IC413	C4	L807	*B1	RB1601	G5		
IC414	*C4	L809	B2	RB1602	G5		
IC415	*D4	L810	B1	RB1603	G4		
IC416	*D4	L811	B2	RS321	E2		
IC417	*D4	L812	*A2	RS322	E2		
IC502	B5	L902	G5	RS401	*D6		
IC503	C5	L903	F5	RS403	*D5		
IC504	B5	L904	J5	RS405	*D5		
IC506	B5	L905	J6	RS408	*D5		
IC509	B5	L906	E5	RS409	*E5		
IC510	B5	L1013	G4	RS414	*D5		
IC511	A5	L1014	G3	RS415	*E5		
IC512	*A5	L1015	G3	RS416	*D5		
IC513	B6	L1016	H5	RS417	*E5		
IC514	B6	L1017	G4	RS418	*D5		
IC515	A6	L1018	G3	RS419	*E5		
IC601	E3	L1019	G3	RS420	*E5		
IC603	*E5	L1300	*J4	RS506	*B5		
IC604	*E5	L1301	*J4	RS507	*B5		
IC605	*E4	L1302	*J5	RS508	*B5		
IC606	*E3	L1400	*J2	RS515	*C5		
IC607	*E3	L1401	*J2	RS516	*C5		
IC608	D2	L1402	*J3	RS903	*L3		
IC610	*G2	L1500	*J3	RS905	*L3		
IC702	B3	L1501	*J3				
		L1502	*J4	RV701	B3		

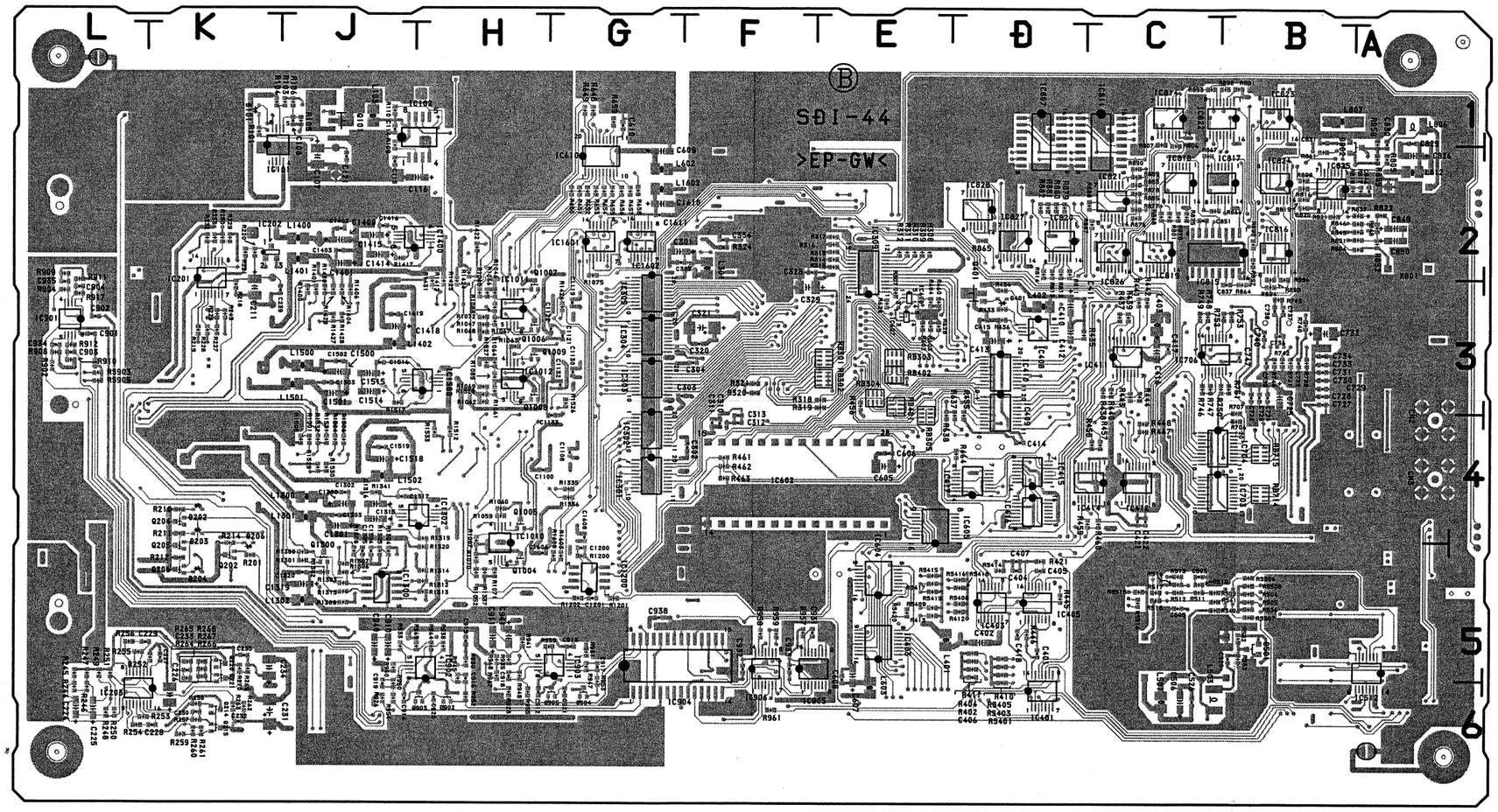

SDI-44 -B SIDE-
SUFFIX: -11

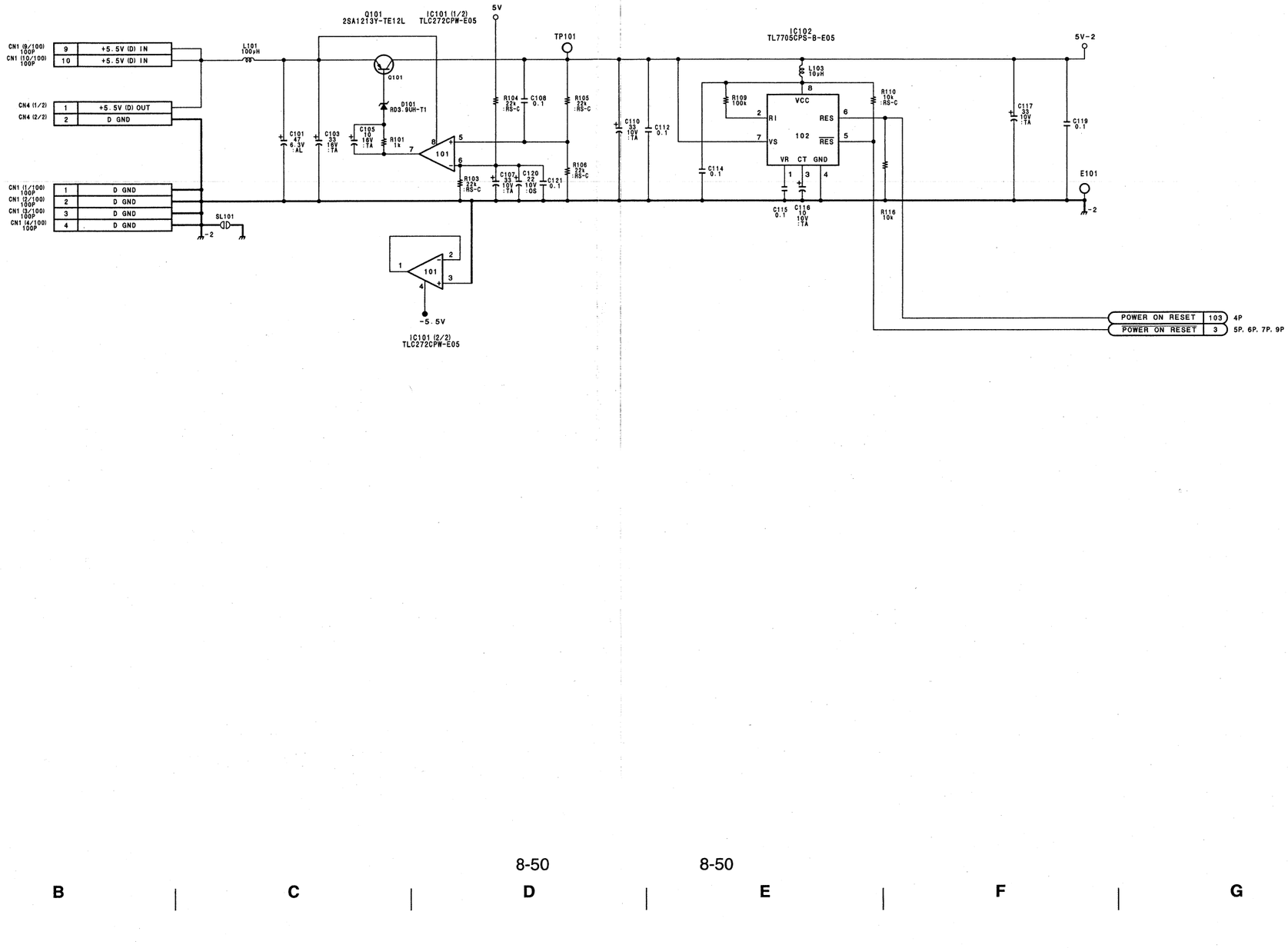
CN1 (9/100) 100P
CN1 (10/100) 100P
9 +5.5V (D) IN
10 +5.5V (D) IN
CN4 (1/2)
CN4 (2/2)
1 +5.5V (D) OUT
2 D GND
CN1 (1/100) 100P
CN1 (2/100) 100P
CN1 (3/100) 100P
CN1 (4/100) 100P
1 D GND
2 D GND
3 D GND
4 D GND
SL101
L101 100μH
Q101 2SA1213Y-TE12L
D101 RD3.9UM-T1
IC101 (1/2) TLC272CPW-E05
5V
TP101
R104 22k :RS-C
C108 0.1
R105 22k :RS-C
C101 47 6.3V :AL
C103 33 16V :TA
C105 10 16V :TA
R101 1k
R103 22k :RS-C
C107 33 16V :TA
C120 22 10V :CS
C121 0.1
R106 22k :RS-C
C110 33 16V :TA
C112 0.1
IC102 TL7705CPS-B-E05
L103 10μH
R109 100k
R110 10k :RS-C
C114 0.1
C115 0.1
C116 10 16V :TA
R116 10k
C117 33 10V :TA
C119 0.1
5V-2
E101
-5.5V
IC101 (2/2) TLC272CPW-E05
POWER ON RESET 103 4P
POWER ON RESET 3 5P, 6P, 7P, 9P

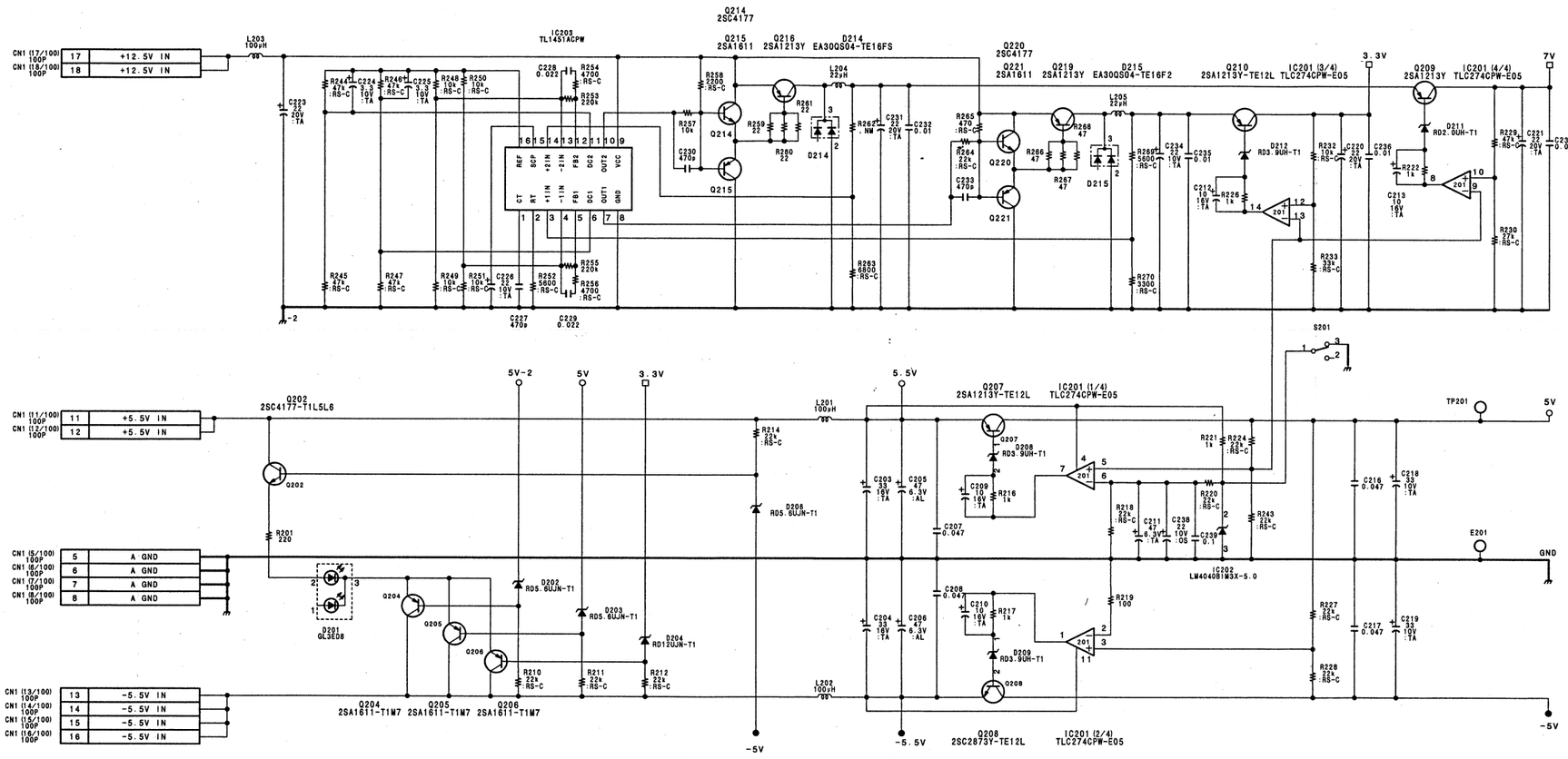

SDI-44 (2/10)
B-DXBK701-SDI44-11

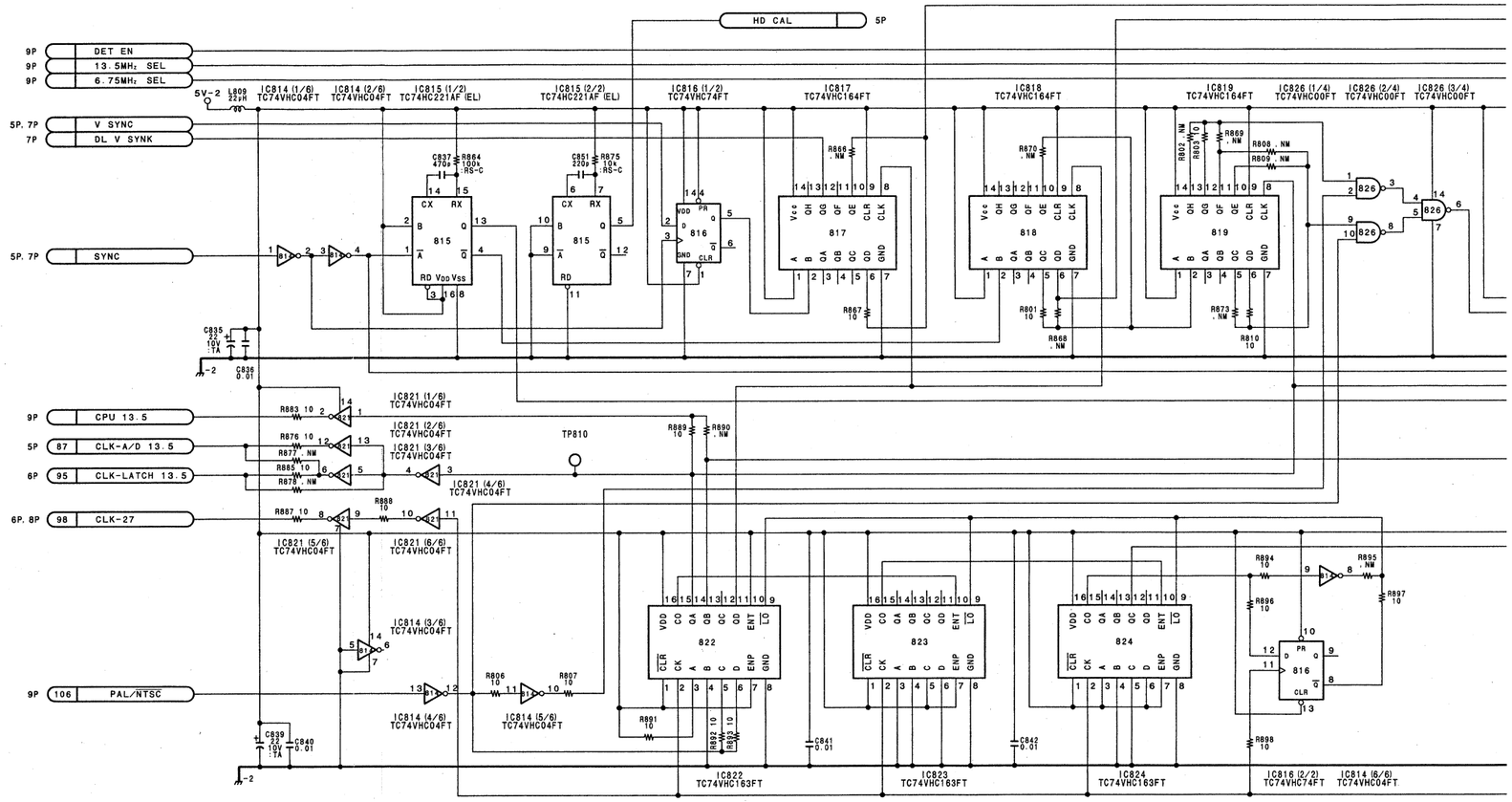
HD CAL
5P
9P DET EN
9P 13.5MHz SEL
9P 6.75MHz SEL
5P, 7P V SYNC
7P DL V SYNK
5P, 7P SYNC
9P CPU 13.5
5P 87 CLK-A/D 13.5
6P 95 CLK-LATCH 13.5
6P, 8P 98 CLK-27
9P 106 PAL/NTSC
IC814 (1/6) TC74VHC04FT
IC814 (2/6) TC74VHC04FT
IC815 (1/2) TC74HC221AF (EL)
IC815 (2/2) TC74HC221AF (EL)
IC816 (1/2) TC74VHC74FT
IC817 TC74VHC164FT
IC818 TC74VHC164FT
IC819 TC74VHC164FT
IC826 (1/4) TC74VHC00FT
IC826 (2/4) TC74VHC00FT
IC826 (3/4) TC74VHC00FT
IC821 (1/6) TC74VHC04FT
IC821 (2/6) TC74VHC04FT
IC821 (3/6) TC74VHC04FT
IC821 (4/6) TC74VHC04FT
IC821 (5/6) TC74VHC04FT
IC821 (6/6) TC74VHC04FT
IC814 (3/6) TC74VHC04FT
IC814 (4/6) TC74VHC04FT
IC814 (5/6) TC74VHC04FT
IC822 TC74VHC163FT
IC823 TC74VHC163FT
IC824 TC74VHC163FT
IC816 (2/2) TC74VHC74FT
IC814 (6/6) TC74VHC04FT
TP810

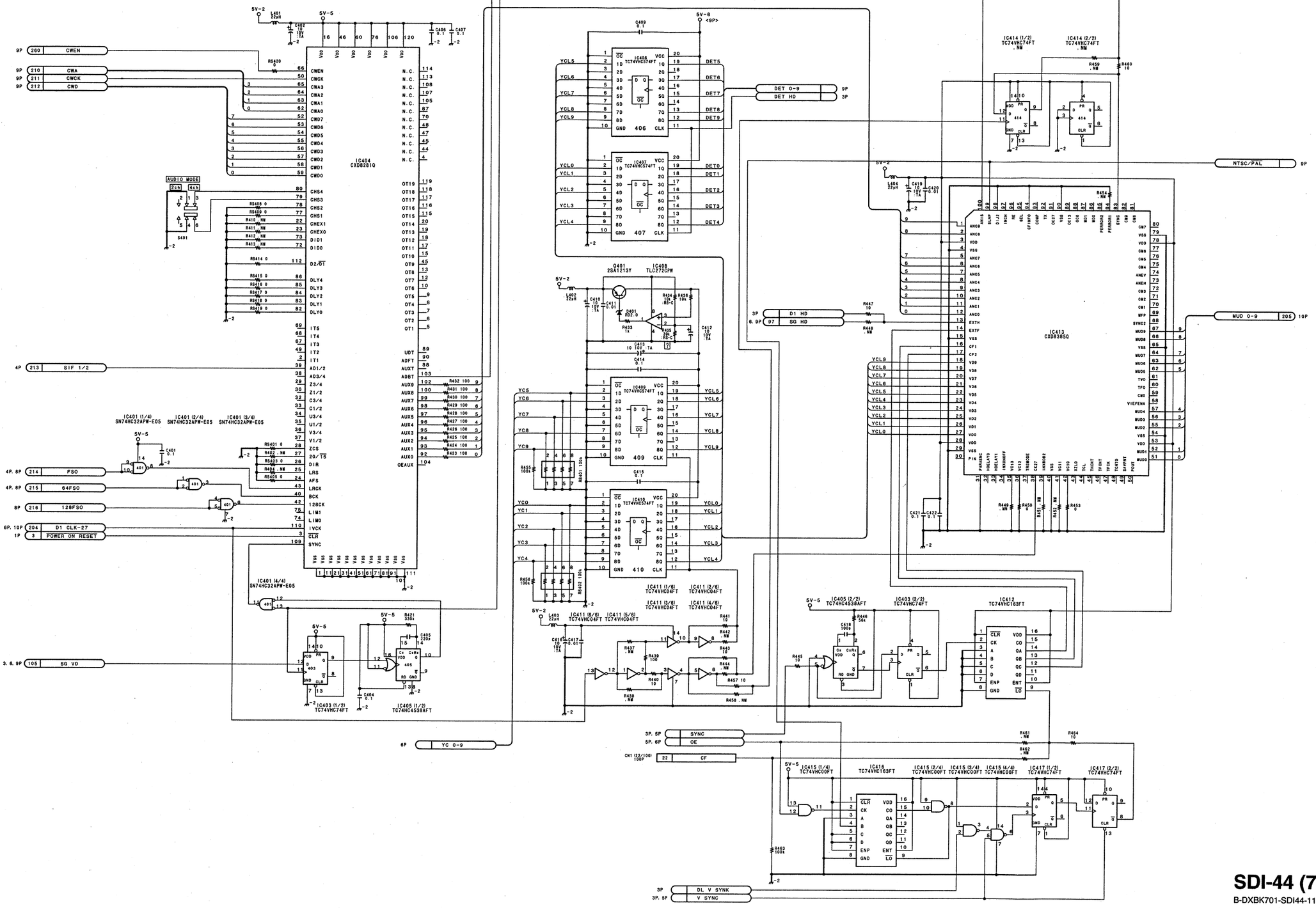

CCU-TX7/V2

SDI-44 (7/10)

B-DXBK701-SDI44-11

SDI-44 (8/10) DXBK-701

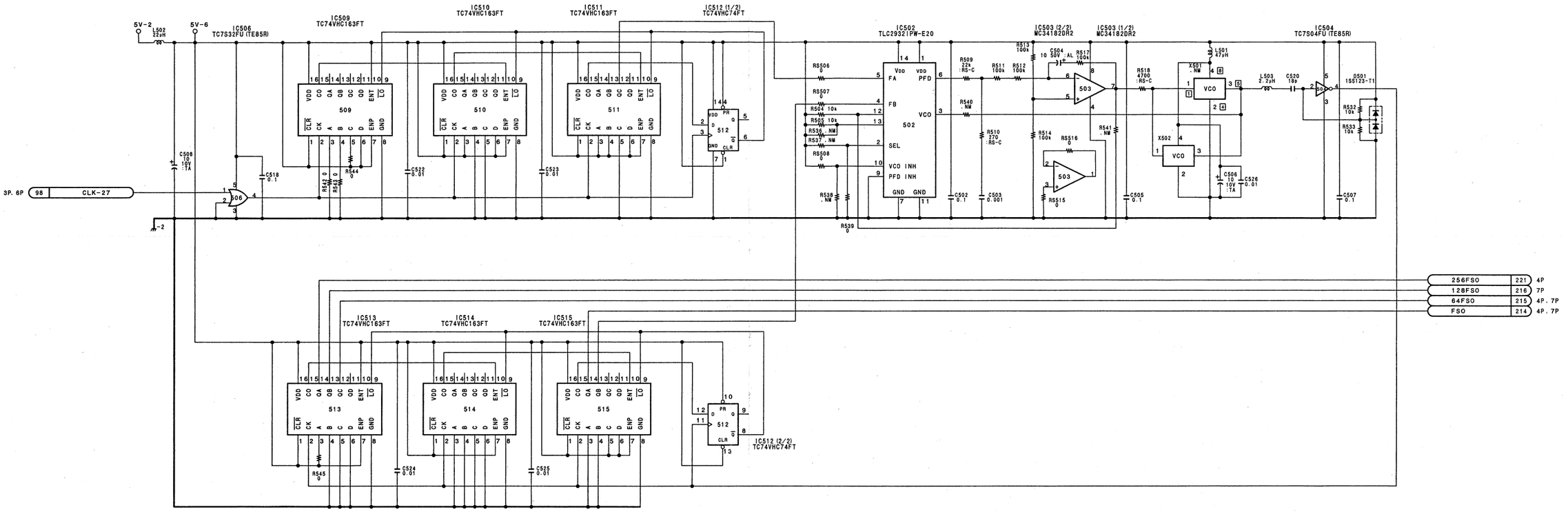

SDI-44 (8/10)

B-DXBK701-SDI44-11

CCU-TX7/V2

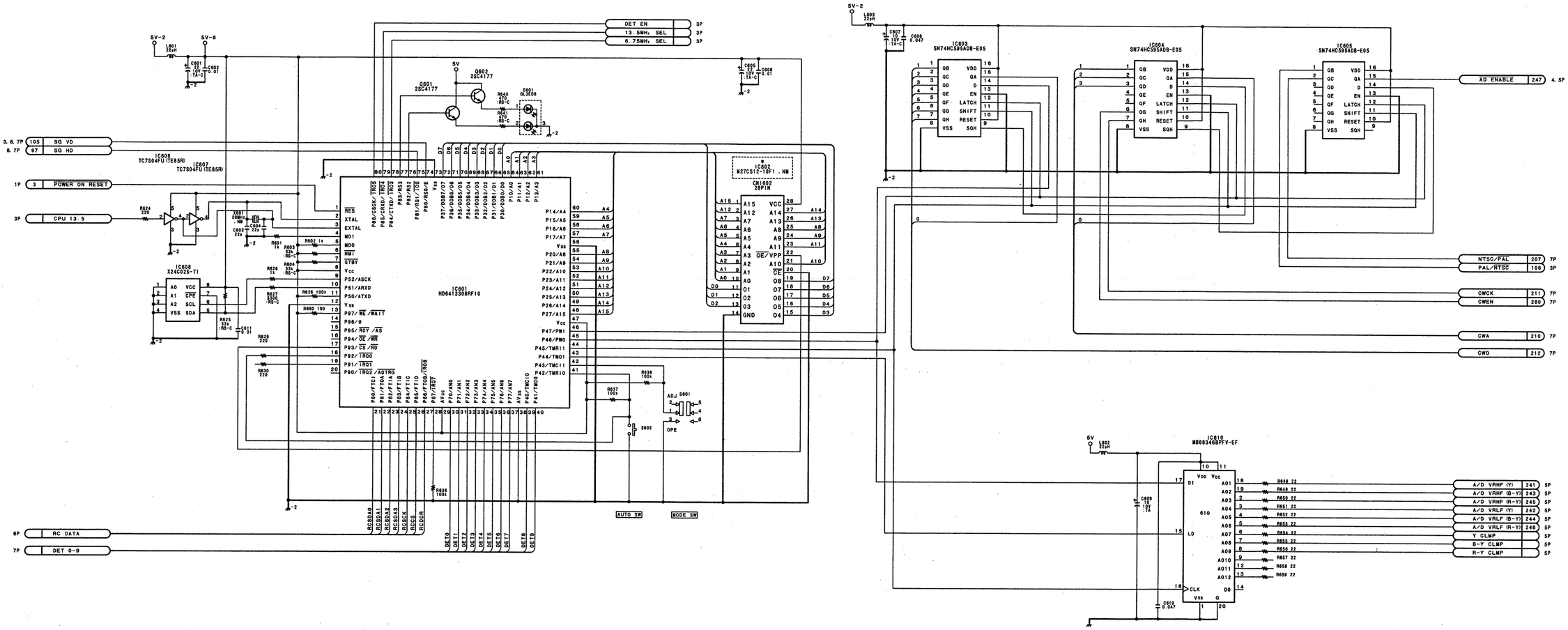

SDI-44 (9/10)
B-DXBK701-SDI44-11

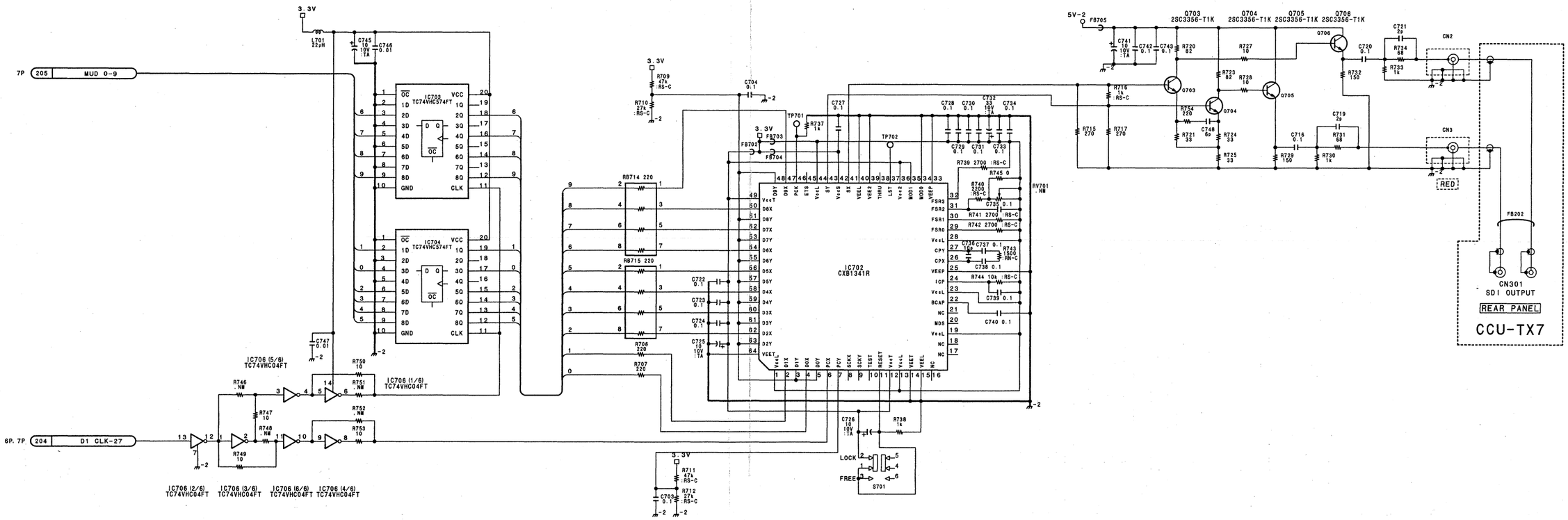

SDI-44 (10/10)

B-DXBK701-SDI44-11

CCU-TX7/V2